19-1377; Rev 1; 9/05

Single/Dual/Quad, Low-Cost, SOT23, Micropower Rail-to-Rail I/O Op Amps

General Description

The MAX4040–MAX4044 family of micropower op amps operates from a single +2.4V to +5.5V supply or dual ±1.2V to ±2.75V supplies and have rail-to-rail input and output capabilities. These amplifiers provide a 90kHz gain-bandwidth product while using only 10µA of supply current per amplifier. The MAX4041/MAX4043 have a low-power shutdown mode that reduces supply current to less than 1µA and forces the output into a high-impedance state. The combination of low-voltage operation, rail-to-rail inputs and outputs, and ultra-low power consumption makes these devices ideal for any portable/battery-powered system.

These amplifiers have outputs that typically swing to within 10mV of the rails with a 100kΩ load. Rail-to-rail input and output characteristics allow the full power-supply voltage to be used for signal range. The combination of low input offset voltage, low input bias current, and high open-loop gain makes them suitable for low-power/low-voltage precision applications.

The MAX4040 is offered in a space-saving 5-pin SOT23 package. All specifications are guaranteed over the -40°C to +85°C extended temperature range.

Applications

- Battery-Powered Systems
- Portable/Battery-Powered Electronic Equipment
- Digital Scales
- Strain Gauges
- Sensor Amplifiers
- Cellular Phones
- Notebook Computers
- PDAs

Features

- ♦ **Single-Supply Operation Down to +2.4V**
- ♦ **Ultra-Low Power Consumption:**
  10µA Supply Current per Amplifier
  1µA Shutdown Mode (MAX4041/MAX4043)
- ♦ **Rail-to-Rail Input Common-Mode Range**
- ♦ **Outputs Swing Rail-to-Rail**
- ♦ **No Phase Reversal for Overdriven Inputs**
- ♦ **200µV Input Offset Voltage**
- ♦ **Unity-Gain Stable for Capacitive Loads up to 200pF**
- ♦ **90kHz Gain-Bandwidth Product**
- ♦ **Available in Space-Saving 5-Pin SOT23 and 8-Pin µMAX® Packages**

Ordering Information

PART	TEMP RANGE	PIN-PACKAGE	SOT TOP MARK
MAX4040EUK-T	-40°C to +85°C	5 SOT23-5	ACGF
MAX4040EUA	-40°C to +85°C	8 µMAX	—
MAX4040ESA	-40°C to +85°C	8 SO	—
MAX4041ESA	-40°C to +85°C	8 SO	—
MAX4041EUA	-40°C to +85°C	8 µMAX	—
MAX4042EUA	-40°C to +85°C	8 µMAX	—
MAX4042ESA	-40°C to +85°C	8 SO	—
MAX4043EUB	-40°C to +85°C	10 µMAX	—
MAX4043ESD	-40°C to +85°C	14 SO	—
MAX4044ESD	-40°C to +85°C	14 SO	—

Selector Guide

PART	NO. OF AMPS	SHUTDOWN	PIN-PACKAGE
MAX4040	1	—	5-pin SOT23, 8-pin µMAX/SO
MAX4041	1	Yes	8-pin µMAX/SO
MAX4042	2	—	8-pin µMAX/SO
MAX4043	2	Yes	10-pin µMAX/ 14-pin SO
MAX4044	4	—	14-pin SO

µMAX is a registered trademark of Maxim Integrated Products, Inc.

Pin Configurations

TOP VIEW

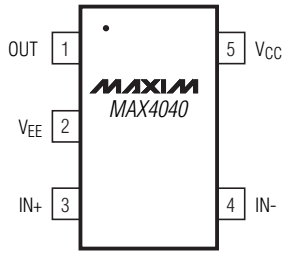

SOT23-5

Pin Configurations continued at end of data sheet.

For pricing, delivery, and ordering information, please contact Maxim/Dallas Direct! at 1-888-629-4642, or visit Maxim's website at www.maxim-ic.com.

Single/Dual/Quad, Low-Cost, SOT23, Micropower, Rail-to-Rail I/O Op Amps

ABSOLUTE MAXIMUM RATINGS

Supply Voltage (V_{CC} to V_{EE}).....+6V
All Other Pins .....(V_{CC} + 0.3V) to (V_{EE} - 0.3V)
Output Short-Circuit Duration to V_{CC} or V_{EE}.....Continuous
Continuous Power Dissipation (T_A = +70°C)
5-Pin SOT23 (derate 7.1mW/°C above +70°C).....571mW
8-Pin µMAX (derate 4.1mW/°C above +70°C).....330mW
8-Pin SO (derate 5.88mW/°C above +70°C).....471mW
10-Pin µMAX (derate 5.6mW/°C above +70°C).....444mW
14-Pin SO (derate 8.33mW/°C above +70°C).....667mW
Operating Temperature Range .....-40°C to +85°C
Junction Temperature.....+150°C
Storage Temperature Range .....-65°C to +160°C
Lead Temperature (soldering, 10s) .....+300°C

Stresses beyond those listed under "Absolute Maximum Ratings" may cause permanent damage to the device. These are stress ratings only, and functional operation of the device at these or any other conditions beyond those indicated in the operational sections of the specifications is not implied. Exposure to absolute maximum rating conditions for extended periods may affect device reliability.

ELECTRICAL CHARACTERISTICS—T_A = +25°C

(V_{CC} = +5.0V, V_{EE} = 0V, V_{CM} = 0V, V_{OUT} = V_{CC} / 2, $\overline{SHDN}$ = V_{CC}, R_L = 100kΩ tied to V_{CC} / 2, unless otherwise noted.)

PARAMETER	SYMBOL	CONDITIONS		MIN	TYP	MAX	UNITS
Supply-Voltage Range	V_{CC}	Inferred from PSRR test		2.4		5.5	V
Supply Current per Amplifier	I_{CC}	V_{CC} = 2.4V			10		µA
		V_{CC} = 5.0V			14	20	
Shutdown Supply Current per Amplifier	$I_{CC(\overline{SHDN})}$	$\overline{SHDN}$ = V_{EE}, MAX4041 and MAX4043 only	V_{CC} = 2.4V		1.0		µA
			V_{CC} = 5.0V		2.0	5.0	
Input Offset Voltage	V_{OS}	$V_{EE} \le V_{CM} \le V_{CC}$	MAX4044ESD		±0.20	±2.0	mV
			MAX404_EU_		±0.25	±2.5	
			All other packages		±0.20	±1.50	mV
Input Bias Current	I_B	(Note 1)			±2	±10	nA
Input Offset Current	I_{OS}	(Note 1)			±0.5	±3.0	nA
Differential Input Resistance	$R_{IN(DIFF)}$	$\lvert V_{IN+} - V_{IN-} \rvert$ < 1.0V			45		MΩ
		$\lvert V_{IN+} - V_{IN-} \rvert$ > 2.5V			4.4		kΩ
Input Common-Mode Voltage Range	V_{CM}	Inferred from the CMRR test		V_{EE}		V_{CC}	V
Common-Mode Rejection Ratio	CMRR	$V_{EE} \le V_{CM} \le V_{CC}$	MAX404_EU_	65	94		dB
			All other packages	70	94		
Power-Supply Rejection Ratio	PSRR	2.4V ≤ V_{CC} ≤ 5.5V		75	85		dB
Large-Signal Voltage Gain	A_{VOL}	(V_{EE} + 0.2V) ≤ V_{OUT} ≤ (V_{CC} - 0.2V)	R_L = 100kΩ		94		dB
			R_L = 25kΩ	74	85		
Output Voltage Swing High	V_{OH}	Specified as $\lvert V_{CC} - V_{OH} \rvert$	R_L = 100kΩ		10		mV
			R_L = 25kΩ		60	90	
Output Voltage Swing Low	V_{OL}	Specified as $\lvert V_{EE} - V_{OL} \rvert$	R_L = 100kΩ		10		mV
			R_L = 25kΩ		40	60	
Output Short-Circuit Current	$I_{OUT(SC)}$	Sourcing			0.7		mA
		Sinking			2.5		
Channel-to-Channel Isolation		Specified at DC, MAX4042/MAX4043/MAX4044 only			80		dB

ELECTRICAL CHARACTERISTICS—T_A = +25°C (continued)

(V_{CC} = +5.0V, V_{EE} = 0V, V_{CM} = 0V, V_{OUT} = V_{CC} / 2, $\overline{SHDN}$ = V_{CC}, R_L = 100kΩ tied to V_{CC} / 2, unless otherwise noted.)

PARAMETER	SYMBOL	CONDITIONS	MIN	TYP	MAX	UNITS
Output Leakage Current in Shutdown	$I_{OUT(\overline{SHDN})}$	$\overline{SHDN}$ = V_{EE} = 0, MAX4041/MAX4043 only (Note 2)		20	100	nA
$\overline{SHDN}$ Logic Low	V_{IL}	MAX4041/MAX4043 only			0.3 x V_{CC}	V
$\overline{SHDN}$ Logic High	V_{IH}	MAX4041/MAX4043 only	0.7 x V_{CC}			V
$\overline{SHDN}$ Input Bias Current	I_{IH}, I_{IL}	MAX4041/MAX4043 only		40	120	nA
Gain Bandwidth Product	GBW			90		kHz
Phase Margin	Φ_m			68		degrees
Gain Margin	G_m			18		dB
Slew Rate	SR			40		V/ms
Input Voltage Noise Density	e_n	f = 1kHz		70		nV/√Hz
Input Current Noise Density	i_n	f = 1kHz		0.05		pA/√Hz
Capacitive-Load Stability		A_{VCL} = +1V/V, no sustained oscillations		200		pF
Power-Up Time	t_{ON}			200		µs
Shutdown Time	$t_{\overline{SHDN}}$	MAX4041 and MAX4043 only		50		µs
Enable Time from Shutdown	t_{EN}	MAX4041 and MAX4043 only		150		µs
Input Capacitance	C_{IN}			3		pF
Total Harmonic Distortion	THD	f_{IN} = 1kHz, V_{OUT} = 2Vp-p, A_V = +1V/V		0.05		%
Settling Time to 0.01%	t_S	A_V = +1V/V, V_{OUT} = $2V_{STEP}$		50		µs

ELECTRICAL CHARACTERISTICS—T_A = T_{MIN} to T_{MAX}

(V_{CC} = +5.0V, V_{EE} = 0V, V_{CM} = 0V, V_{OUT} = V_{CC} / 2, $\overline{SHDN}$ = V_{CC}, R_L = 100kΩ tied to V_{CC} / 2, unless otherwise noted.) (Note 3)

PARAMETER	SYMBOL	CONDITIONS		MIN	TYP	MAX	UNITS
Supply-Voltage Range	V_{CC}	Inferred from PSRR test		2.4		5.5	V
Supply Current per Amplifier	I_{CC}					28	µA
Shutdown Supply Current per Amplifier	$I_{CC(\overline{SHDN})}$	$\overline{SHDN}$ = V_{EE}, MAX4041 and MAX4043 only				6.0	µA
Input Offset Voltage	V_{OS}	$V_{EE} \le V_{CM} \le V_{CC}$	MAX4044ESA			±4.5	mV
			MAX404_EU_			±5.0	
			All other packages			±3.5	
Input Offset Voltage Drift	TC_{VOS}				2		µV/°C
Input Bias Current	I_B	(Note 1)				±20	nA
Input Offset Current	I_{OS}	(Note 1)				±8	nA

Single/Dual/Quad, Low-Cost, SOT23, Micropower, Rail-to-Rail I/O Op Amps

ELECTRICAL CHARACTERISTICS—T_A = T_{MIN} to T_{MAX} (continued)

(V_{CC} = +5.0V, V_{EE} = 0V, V_{CM} = 0V, V_{OUT} = V_{CC} / 2, $\overline{SHDN}$ = V_{CC}, R_L = 100kΩ tied to V_{CC} / 2, unless otherwise noted.) (Note 3)

PARAMETER	SYMBOL	CONDITIONS		MIN	TYP	MAX	UNITS
Input Common-Mode Voltage Range	V_{CM}	Inferred from the CMRR test		V_{EE}		V_{CC}	V
Common-Mode Rejection Ratio	CMRR	$V_{EE} \le V_{CM} \le V_{CC}$	MAX404_EU_	60			dB
			All other packages	65			
Power-Supply Rejection Ratio	PSRR	2.4V ≤ V_{CC} ≤ 5.5V		70			dB
Large-Signal Voltage Gain	A_{VOL}	(V_{EE} + 0.2V) ≤ V_{OUT} ≤ (V_{CC} - 0.2V), R_L = 25kΩ		68			dB
Output Voltage Swing High	V_{OH}	Specified as $\lvert V_{CC} - V_{OH} \rvert$, R_L = 25kΩ				125	mV
Output Voltage Swing Low	V_{OL}	Specified as $\lvert V_{EE} - V_{OL} \rvert$, R_L = 25kΩ				75	mV

Note 1: Input bias current and input offset current are tested with V_{CC} = +5.0V and +0.5V ≤ V_{CM} ≤ +4.5V.
Note 2: Tested for $V_{EE} \le V_{OUT} \le V_{CC}$. Does not include current through external feedback network.
Note 3: All devices are 100% tested at T_A = +25°C. All temperature limits are guaranteed by design.

Typical Operating Characteristics

(V_{CC} = +5.0V, V_{EE} = 0, V_{CM} = V_{CC} / 2, $\overline{SHDN}$ = V_{CC}, R_L = 100kΩ to V_{CC} / 2, T_A = +25°C, unless otherwise noted.)

SUPPLY CURRENT PER AMPLIFIER vs. TEMPERATURE

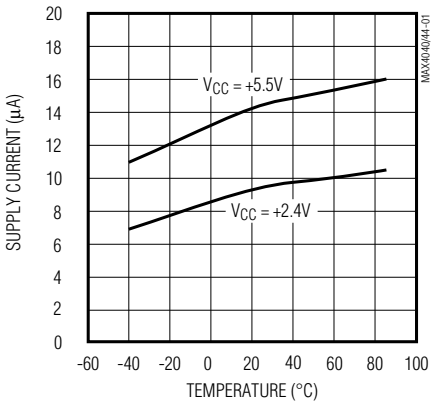

MAX4041/MAX4043 SHUTDOWN SUPPLY CURRENT PER AMPLIFIER vs. TEMPERATURE

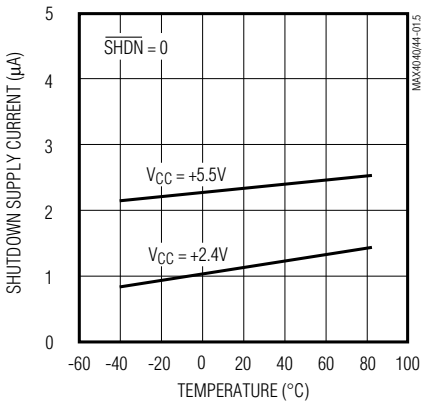

Typical Operating Characteristics (continued)

(V_{CC} = +5.0V, V_{EE} = 0, V_{CM} = V_{CC} / 2, $\overline{SHDN}$ = V_{CC}, R_L = 100kΩ to V_{CC} / 2, T_A = +25°C, unless otherwise noted.)

INPUT OFFSET VOLTAGE vs. TEMPERATURE

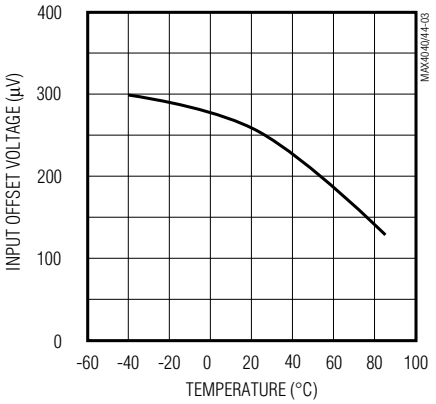

INPUT BIAS CURRENT vs. TEMPERATURE

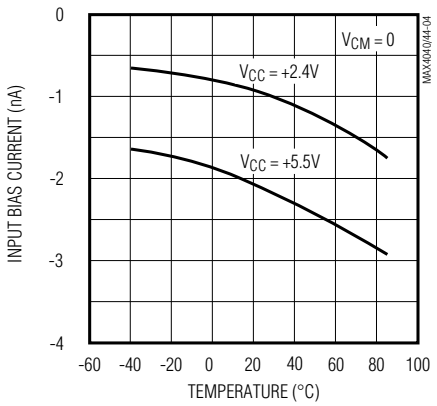

INPUT BIAS CURRENT vs. COMMON-MODE VOLTAGE (V_{CC} = 2.4V)

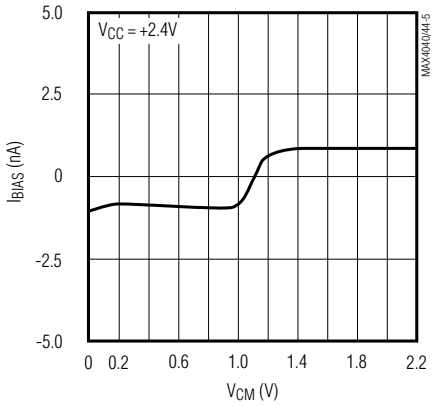

INPUT BIAS CURRENT vs. COMMON-MODE VOLTAGE (V_{CC} = 5.5V)

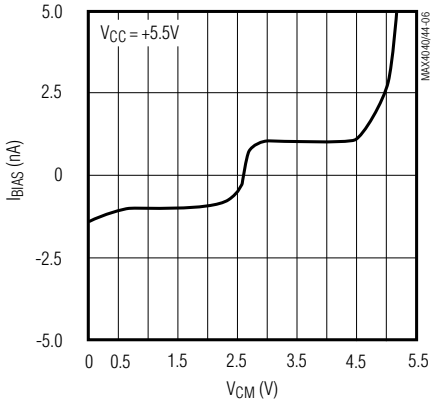

OUTPUT SWING HIGH vs. TEMPERATURE

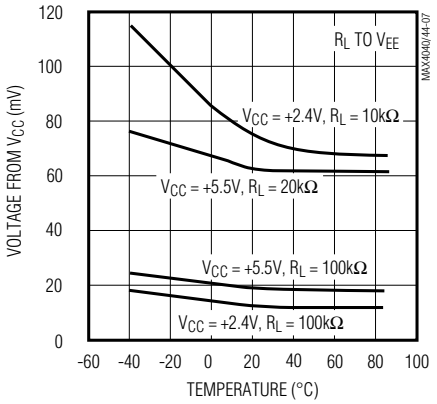

OUTPUT SWING LOW vs. TEMPERATURE

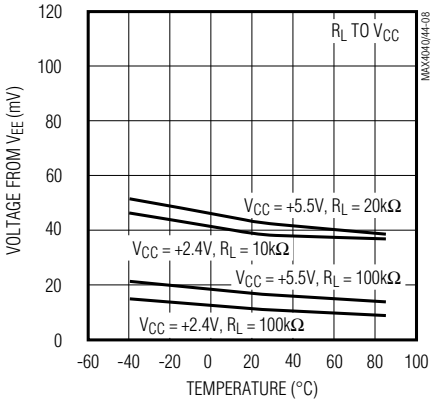

COMMON-MODE REJECTION vs. TEMPERATURE

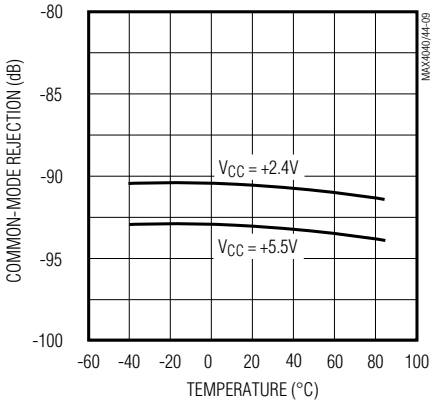

Single/Dual/Quad, Low-Cost, SOT23, Micropower, Rail-to-Rail I/O Op Amps

Typical Operating Characteristics (continued)

(V_{CC} = +5.0V, V_{EE} = 0, V_{CM} = V_{CC} / 2, $\overline{SHDN}$ = V_{CC}, R_L = 100kΩ to V_{CC} / 2, T_A = +25°C, unless otherwise noted.)

OPEN-LOOP GAIN vs. OUTPUT SWING LOW (V_{CC} = +2.4V, R_L TIED TO V_{CC})

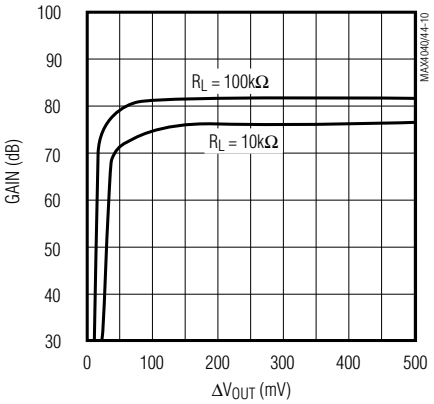

OPEN-LOOP GAIN vs. OUTPUT SWING HIGH (V_{CC} = +2.4V, R_L TIED TO V_{EE})

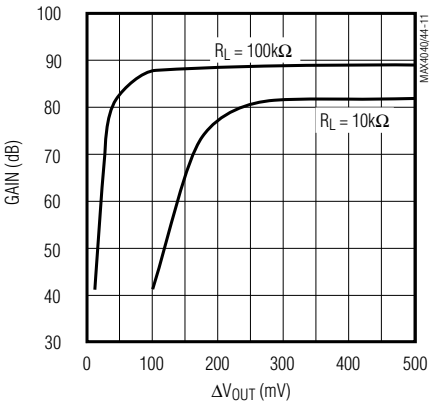

OPEN-LOOP GAIN vs. OUTPUT SWING LOW (V_{CC} = +5.5V, R_L TIED TO V_{CC})

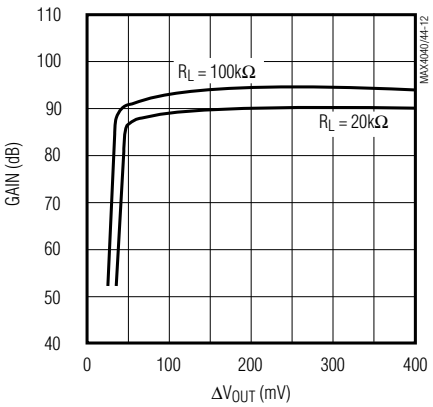

OPEN-LOOP GAIN vs. OUTPUT SWING HIGH (V_{CC} = +5.5V, R_L TIED TO V_{EE})

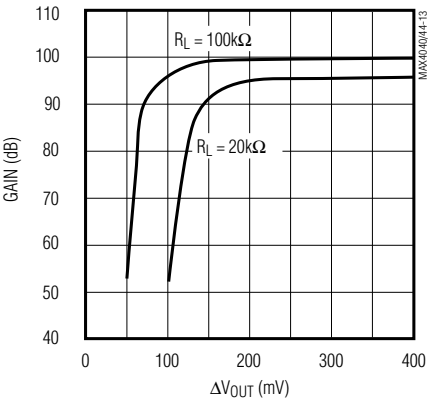

OPEN-LOOP GAIN vs. TEMPERATURE

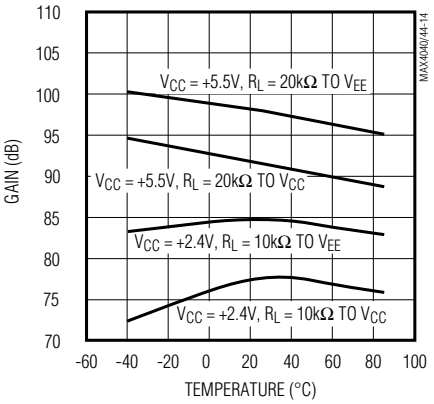

OPEN-LOOP GAIN vs. TEMPERATURE

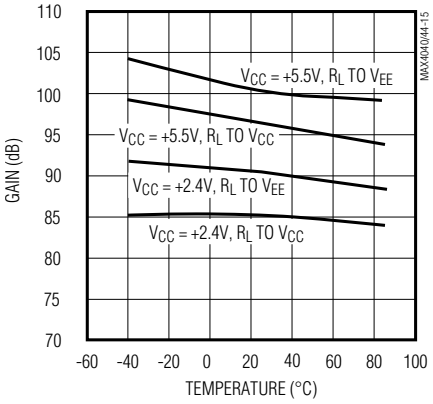

GAIN AND PHASE vs. FREQUENCY (NO LOAD)

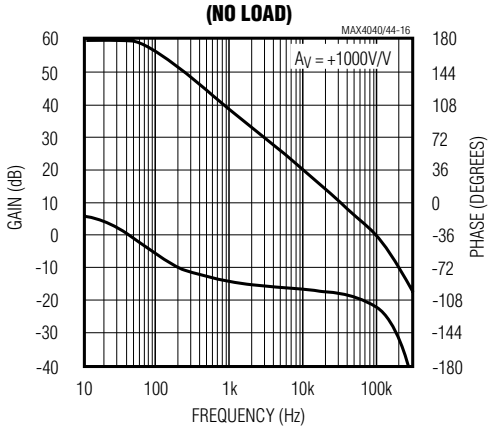

GAIN AND PHASE vs. FREQUENCY (C_L = 100pF)

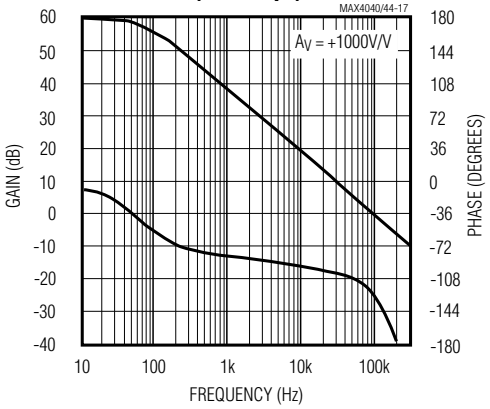

Typical Operating Characteristics (continued)

(V_{CC} = +5.0V, V_{EE} = 0, V_{CM} = V_{CC} / 2, $\overline{SHDN}$ = V_{CC}, R_L = 100kΩ to V_{CC} / 2, T_A = +25°C, unless otherwise noted.)

MAX4042/MAX4043/MAX4044 CROSSTALK vs. FREQUENCY

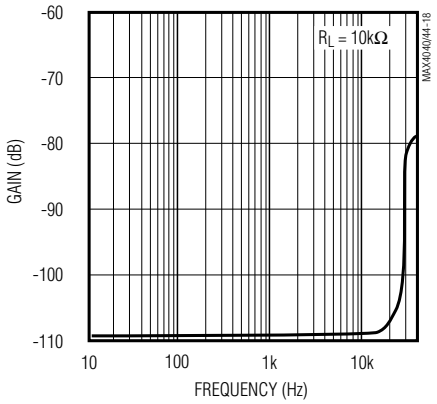

TOTAL HARMONIC DISTORTION PLUS NOISE vs. FREQUENCY

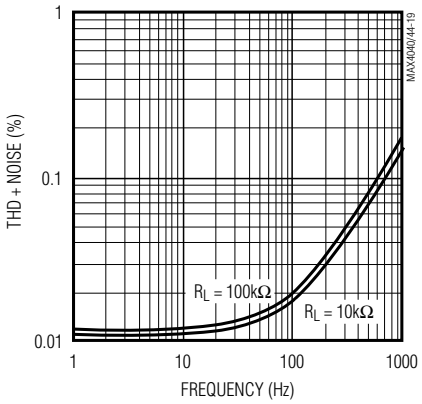

LOAD RESISTOR vs. CAPACITIVE LOAD

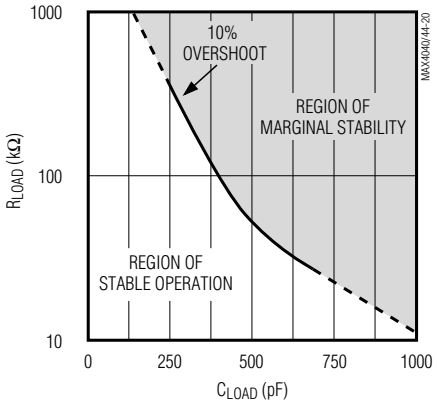

SMALL-SIGNAL TRANSIENT RESPONSE (NONINVERTING)

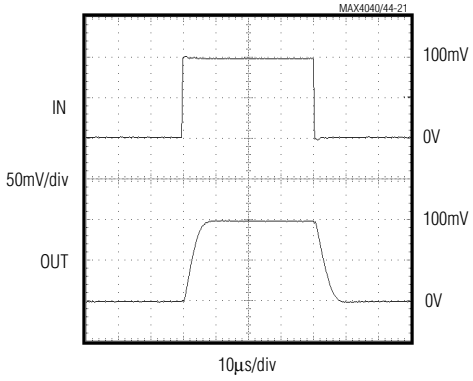

SMALL-SIGNAL TRANSIENT RESPONSE (INVERTING)

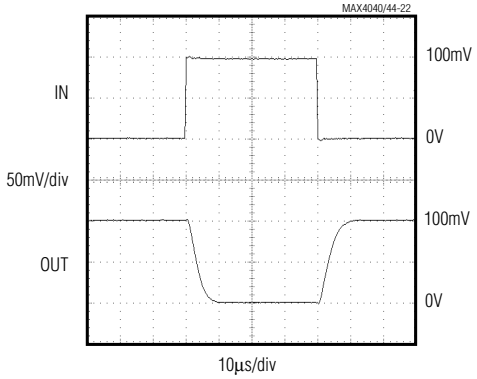

LARGE-SIGNAL TRANSIENT RESPONSE (NONINVERTING)

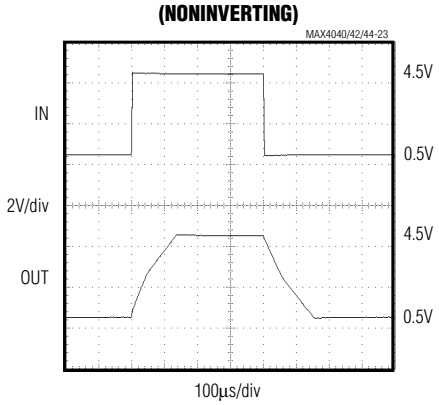

LARGE-SIGNAL TRANSIENT RESPONSE (INVERTING)

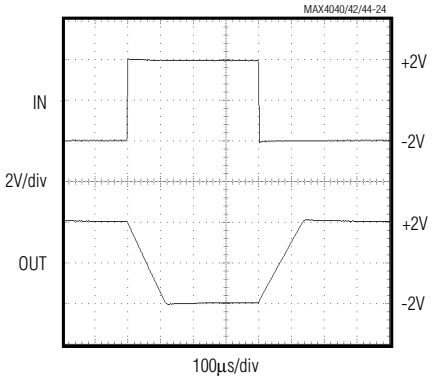

Single/Dual/Quad, Low-Cost, SOT23, Micropower, Rail-to-Rail I/O Op Amps

Pin Description

PIN							NAME	FUNCTION
MAX4040		MAX4041	MAX4042	MAX4043		MAX4044		
SOT23-5	SO/µMAX			µMAX	SO			
1	6	6	—	—	—	—	OUT	Amplifier Output. High impedance when in shutdown mode.
2	4	4	4	4	4	11	V_{EE}	Negative Supply. Tie to ground for single-supply operation.
3	3	3	—	—	—	—	IN+	Noninverting Input
4	2	2	—	—	—	—	IN-	Inverting Input
5	7	7	8	10	14	4	V_{CC}	Positive Supply
—	1, 5, 8	1, 5	—	—	5, 7, 8, 10	—	N.C.	No Connection. Not internally connected.
—	—	8	—	—	—	—	$\overline{SHDN}$	Shutdown Input. Drive high, or tie to V_{CC} for normal operation. Drive to V_{EE} to place device in shutdown mode.
—	—	—	1, 7	1, 9	1, 13	1, 7	OUTA, OUTB	Outputs for Amplifiers A and B. High impedance when in shutdown mode.
—	—	—	2, 6	2, 8	2, 12	2, 6	INA-, INB-	Inverting Inputs to Amplifiers A and B
—	—	—	3, 5	3, 7	3, 11	3, 5	INA+, INB+	Noninverting Inputs to Amplifiers A and B
—	—	—	—	5, 6	6, 9	—	$\overline{SHDNA}$, $\overline{SHDNB}$	Shutdown Inputs for Amplifiers A and B. Drive high, or tie to V_{CC} for normal operation. Drive to V_{EE} to place device in shutdown mode.
—	—	—	—	—	—	8, 14	OUTC, OUTD	Outputs for Amplifiers C and D
—	—	—	—	—	—	9, 13	INC-, IND-	Inverting Inputs to Amplifiers C and D
—	—	—	—	—	—	10, 12	INC+, IND+	Noninverting Inputs to Amplifiers C and D

Detailed Description

Rail-to-Rail Input Stage

The MAX4040–MAX4044 have rail-to-rail inputs and rail-to-rail output stages that are specifically designed for low-voltage, single-supply operation. The input stage consists of separate NPN and PNP differential stages, which operate together to provide a common-mode range extending to both supply rails. The crossover region of these two pairs occurs halfway between V_{CC} and V_{EE}. The input offset voltage is typically 200µV. Low operating supply voltage, low supply current, rail-to-rail common-mode input range, and rail-to-rail outputs make this family of operational amplifiers an excellent choice for precision or general-purpose, low-voltage battery-powered systems.

Since the input stage consists of NPN and PNP pairs, the input bias current changes polarity as the common-mode voltage passes through the crossover region. Match the effective impedance seen by each input to reduce the offset error caused by input bias currents flowing through external source impedances (Figures 1a and 1b). The combination of high source impedance plus input capacitance (amplifier input capacitance plus stray capacitance) creates a parasitic pole that produces an underdamped signal response. Reducing input capacitance or placing a small capacitor across the feedback resistor improves response in this case.

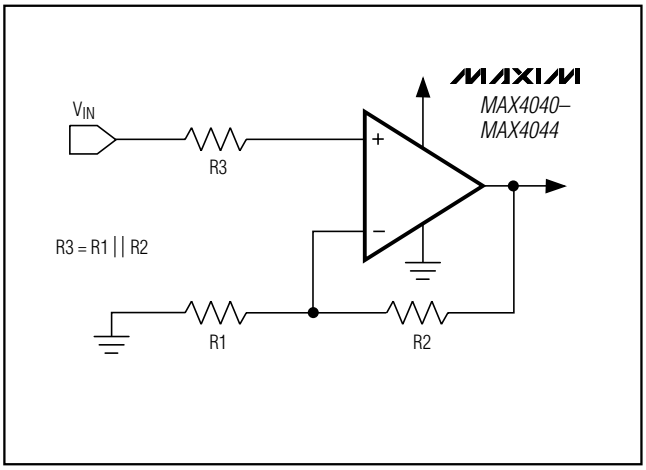

Figure 1a. Minimizing Offset Error Due to Input Bias Current (Noninverting)

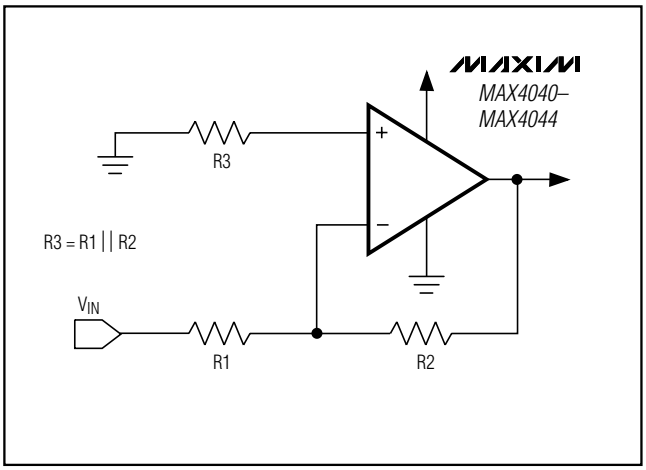

Figure 1b. Minimizing Offset Error Due to Input Bias Current (Inverting)

The MAX4040–MAX4044 family's inputs are protected from large differential input voltages by internal 2.2kΩ series resistors and back-to-back triple-diode stacks across the inputs (Figure 2). For differential input voltages (much less than 1.8V), input resistance is typically 45MΩ. For differential input voltages greater than 1.8V, input resistance is around 4.4kΩ, and the input bias current can be approximated by the following equation:

$$I_{BIAS} = (V_{DIFF} - 1.8V) / 4.4k\Omega$$

In the region where the differential input voltage approaches 1.8V, the input resistance decreases exponentially from 45MΩ to 4.4kΩ as the diode block begins conducting. Conversely, the bias current increases with the same curve.

Rail-to-Rail Output Stage

The MAX4040–MAX4044 output stage can drive up to a 25kΩ load and still swing to within 60mV of the rails. Figure 3 shows the output voltage swing of a MAX4040 configured as a unity-gain buffer, powered from a single +4.0V supply voltage. The output for this setup typically swings from (V_{EE} + 10mV) to (V_{CC} - 10mV) with a 100kΩ load.

Applications Information

Power-Supply Considerations

The MAX4040–MAX4044 operate from a single +2.4V to +5.5V supply (or dual ±1.2V to ±2.75V supplies) and consume only 10µA of supply current per amplifier. A high power-supply rejection ratio of 85dB allows the amplifiers to be powered directly off a decaying battery voltage, simplifying design and extending battery life.

Power-Up Settling Time

The MAX4040–MAX4044 typically require 200µs to power up after V_{CC} is stable. During this start-up time, the output is indeterminant. The application circuit should allow for this initial delay.

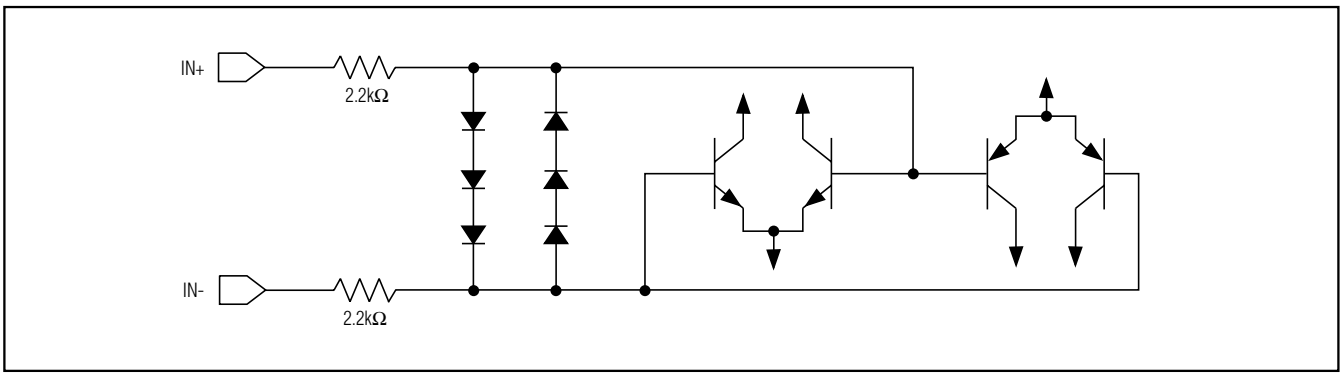

Figure 2. Input Protection Circuit

Single/Dual/Quad, Low-Cost, SOT23, Micropower, Rail-to-Rail I/O Op Amps

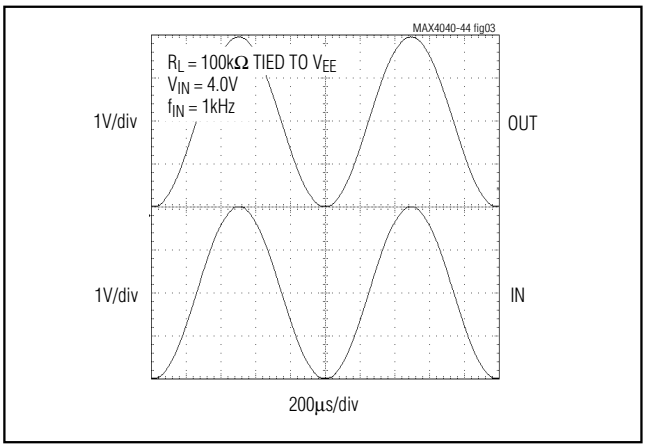

Figure 3. Rail-to-Rail Input/Output Voltage Range

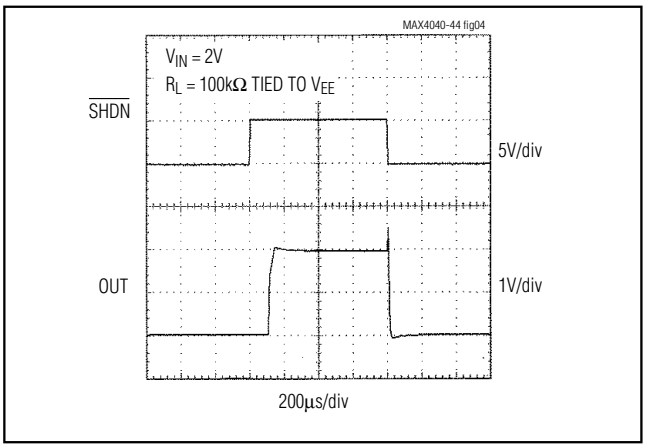

Figure 4. Shutdown Enable/Disable Output Voltage

Shutdown Mode

The MAX4041 (single) and MAX4043 (dual) feature a low-power shutdown mode. When the shutdown pin ($\overline{SHDN}$) is pulled low, the supply current drops to 1µA per amplifier, the amplifier is disabled, and the outputs enter a high-impedance state. Pulling $\overline{SHDN}$ high or leaving it floating enables the amplifier. Take care to ensure that parasitic leakage current at the $\overline{SHDN}$ pin does not inadvertently place the part into shutdown mode when $\overline{SHDN}$ is left floating. Figure 4 shows the output voltage response to a shutdown pulse. The logic threshold for $\overline{SHDN}$ is always referred to V_{CC} / 2 (not to GND). When using dual supplies, pull $\overline{SHDN}$ to V_{EE} to enter shutdown mode.

Load-Driving Capability

The MAX4040–MAX4044 are fully guaranteed over temperature and supply voltage to drive a maximum resistive load of 25kΩ to V_{CC} / 2, although heavier loads can be driven in many applications. The rail-to-rail output stage of the amplifier can be modeled as a current source when driving the load toward V_{CC}, and as a current sink when driving the load toward V_{EE}. The magnitude of this current source/sink varies with supply voltage, ambient temperature, and lot-to-lot variations of the units.

Figures 5a and 5b show the typical current source and sink capability of the MAX4040–MAX4044 family as a function of supply voltage and ambient temperature. The contours on the graph depict the output current value, based on driving the output voltage to within 50mV, 100mV, and 200mV of either power-supply rail.

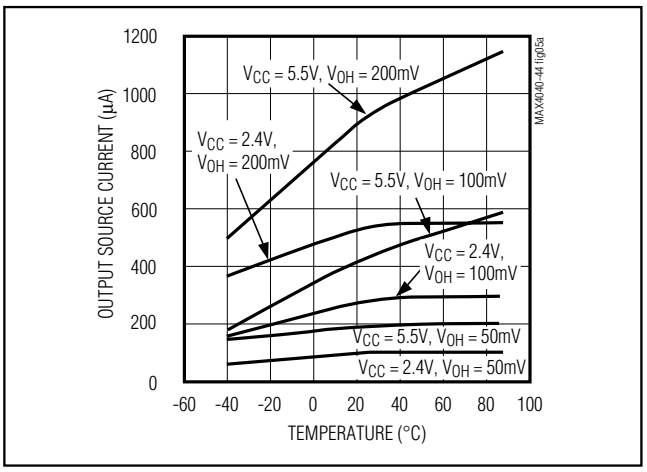

Figure 5a. Output Source Current vs. Temperature

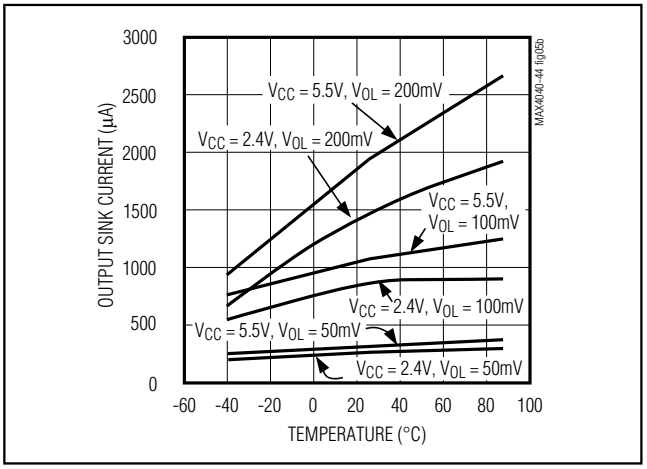

Figure 5b. Output Sink Current vs. Temperature

For example, a MAX4040 running from a single +2.4V supply, operating at T_A = +25°C, can source 240µA to within 100mV of V_{CC} and is capable of driving a 9.6kΩ load resistor to V_{EE}:

$$R_L = \frac{2.4V - 0.1V}{240\mu A} = 9.6k\Omega \text{ to } V_{EE}$$

The same application can drive a 4.6kΩ load resistor when terminated in V_{CC} / 2 (+1.2V in this case).

Driving Capacitive Loads

The MAX4040–MAX4044 are unity-gain stable for loads up to 200pF (see Load Resistor vs. Capacitive Load graph in *Typical Operating Characteristics*). Applications that require greater capacitive drive capability should use an isolation resistor between the output and the capacitive load (Figures 6a–6c). Note that this alternative results in a loss of gain accuracy because R_{ISO} forms a voltage divider with the load resistor.

Power-Supply Bypassing and Layout

The MAX4040–MAX4044 family operates from either a single +2.4V to +5.5V supply or dual ±1.2V to ±2.75V supplies. For single-supply operation, bypass the power supply with a 100nF capacitor to V_{EE} (in this case GND). For dual-supply operation, both the V_{CC} and V_{EE} supplies should be bypassed to ground with separate 100nF capacitors.

Good PC board layout techniques optimize performance by decreasing the amount of stray capacitance at the op amp's inputs and output. To decrease stray capacitance, minimize trace lengths by placing external components as close as possible to the op amp. Surface-mount components are an excellent choice.

Using the MAX4040–MAX4044 as Comparators

Although optimized for use as operational amplifiers, the MAX4040–MAX4044 can also be used as rail-to-rail I/O comparators. Typical propagation delay depends on the input overdrive voltage, as shown in Figure 7. External hysteresis can be used to minimize the risk of output oscillation. The positive feedback circuit, shown in Figure 8, causes the input threshold to change when the output voltage changes state. The two thresholds create a hysteresis band that can be calculated by the following equations:

$$V_{HYST} = V_{HI} - V_{LO}$$

$$V_{LO} = V_{IN} \times R2 / (R1 + (R1 \times R2 / R_{HYST}) + R2)$$

$$V_{HI} = [(R2 / R1 \times V_{IN}) + (R2 / R_{HYST}) \times V_{CC}] / (1 + R1 / R2 + R2 / R_{HYST})$$

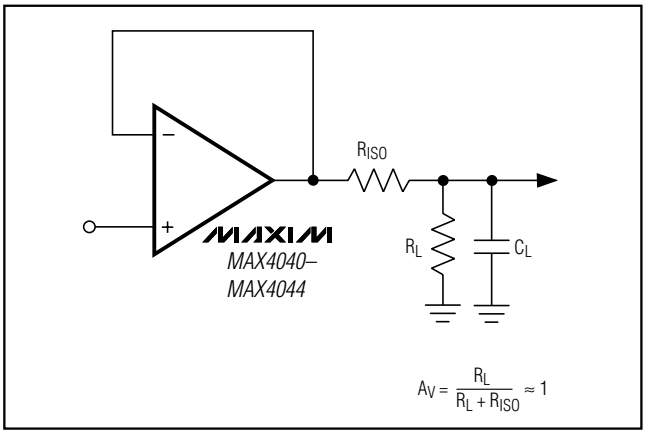

Figure 6a. Using a Resistor to Isolate a Capacitive Load from the Op Amp

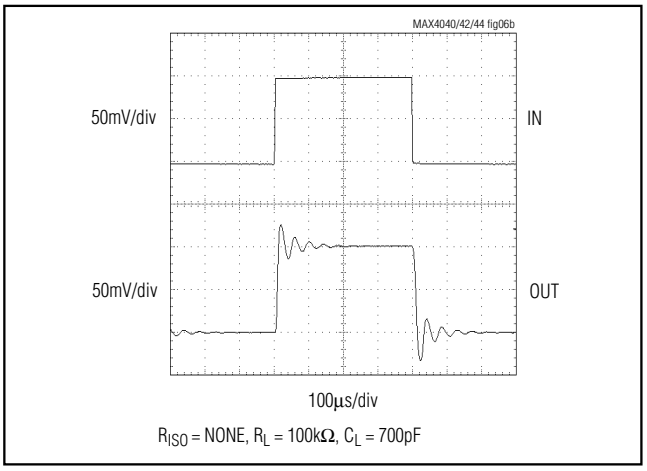

Figure 6b. Pulse Response without Isolating Resistor

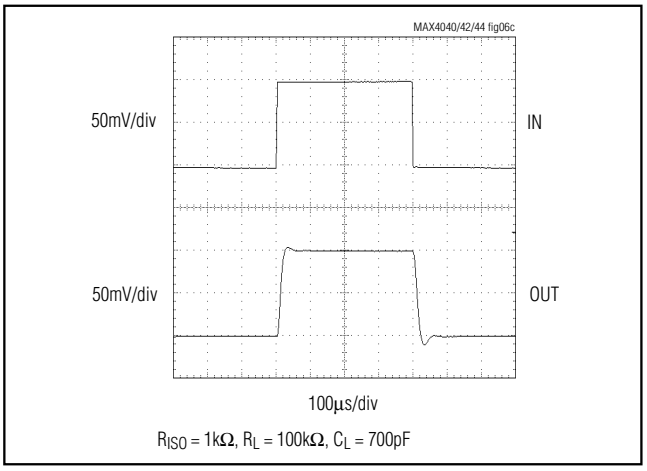

Figure 6c. Pulse Response with Isolating Resistor

Single/Dual/Quad, Low-Cost, SOT23, Micropower, Rail-to-Rail I/O Op Amps

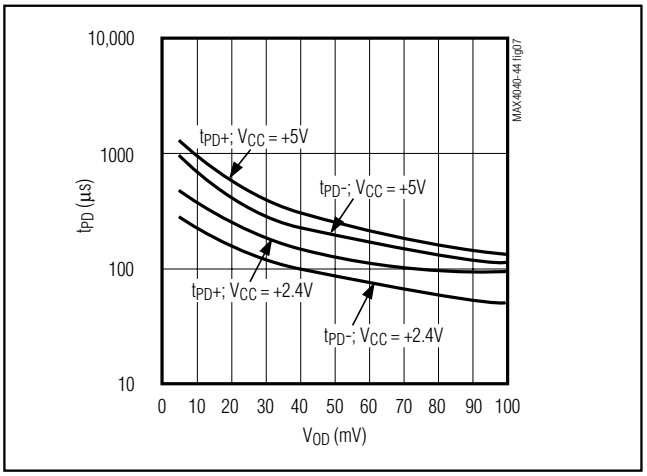

Figure 7. Propagation Delay vs. Input Overdrive

The MAX4040–MAX4044 contain special circuitry to boost internal drive currents to the amplifier output stage. This maximizes the output voltage range over which the amplifiers are linear. In an open-loop comparator application, the excursion of the output voltage is so close to the supply rails that the output stage transistors will saturate, causing the quiescent current to increase from the normal 10µA. Typical quiescent currents increase to 35µA for the output saturating at V_{CC} and 28µA for the output at V_{EE}.

Using the MAX4040–MAX4044 as Ultra-Low-Power Current Monitors

The MAX4040–MAX4044 are ideal for applications powered from a battery stack. Figure 9 shows an application circuit in which the MAX4040 is used for monitoring the current of a battery stack. In this circuit, a current load is applied, and the voltage drop at the battery terminal is sensed.

The voltage on the load side of the battery stack is equal to the voltage at the emitter of Q1, due to the feedback loop containing the op amp. As the load current increases, the voltage drop across R1 and R2 increases. Thus, R2 provides a fraction of the load current (set by the ratio of R1 and R2) that flows into the emitter of the PNP transistor. Neglecting PNP base current, this current flows into R3, producing a ground-referenced voltage proportional to the load current. Scale R1 to give a voltage drop large enough in comparison to V_{OS} of the op amp, in order to minimize errors.

The output voltage of the application can be calculated using the following equation:

$$V_{OUT} = [I_{LOAD} \times (R1 / R2)] \times R3$$

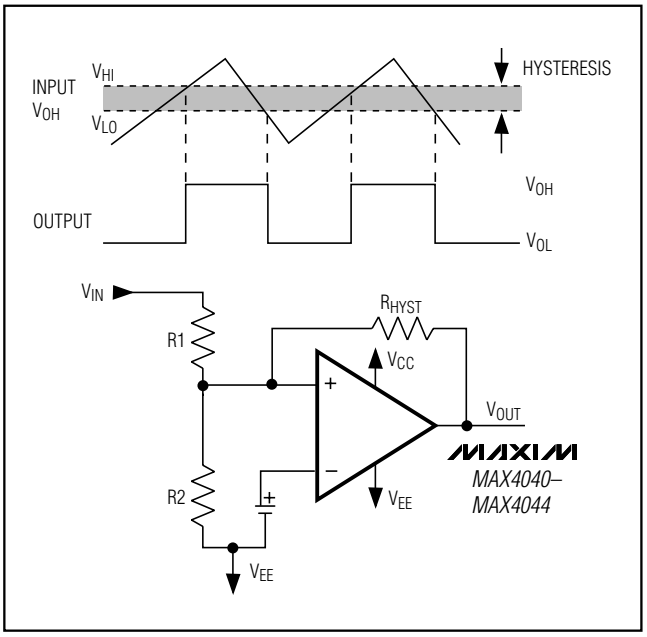

Figure 8. Hysteresis Comparator Circuit

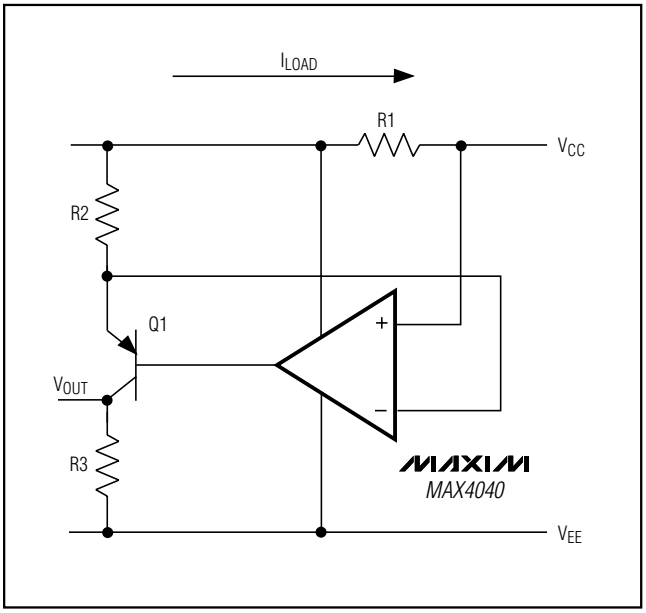

Figure 9. Current Monitor for a Battery Stack

For a 1V output and a current load of 50mA, the choice of resistors can be R1 = 2Ω, R2 = 100kΩ, R3 = 1MΩ. The circuit consumes less power (but is more susceptible to noise) with higher values of R1, R2, and R3.

Pin Configurations (continued)

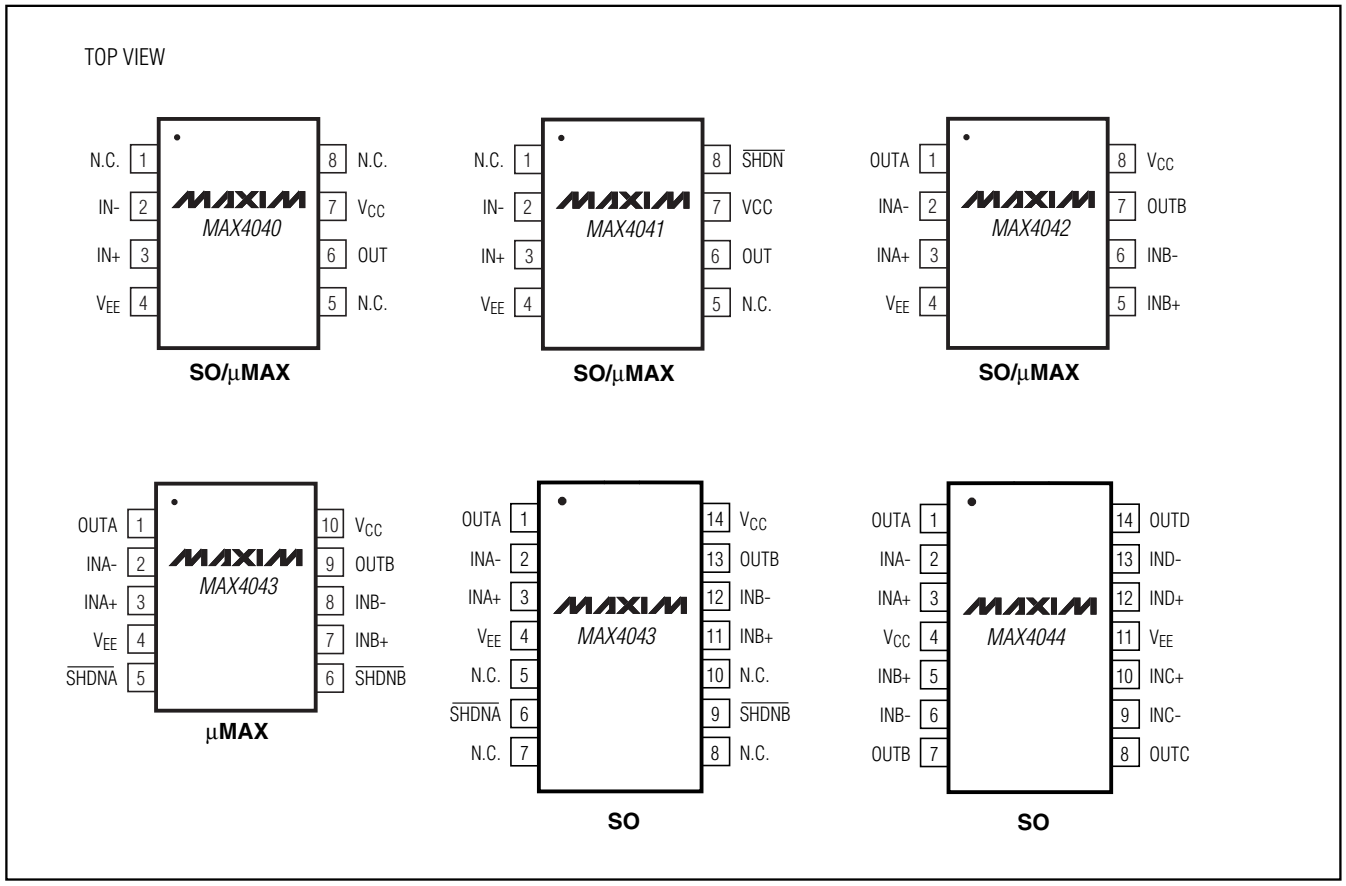

Chip Information

MAX4040/MAX4041 TRANSISTOR COUNT: 234

MAX4042/MAX4043 TRANSISTOR COUNT: 466

MAX4044 TRANSISTOR COUNT: 932

SUBSTRATE CONNECTED TO V_{EE}

Single/Dual/Quad, Low-Cost, SOT23, Micropower, Rail-to-Rail I/O Op Amps

Package Information

(The package drawing(s) in this data sheet may not reflect the most current specifications. For the latest package outline information go to **www.maxim-ic.com/packages**.)

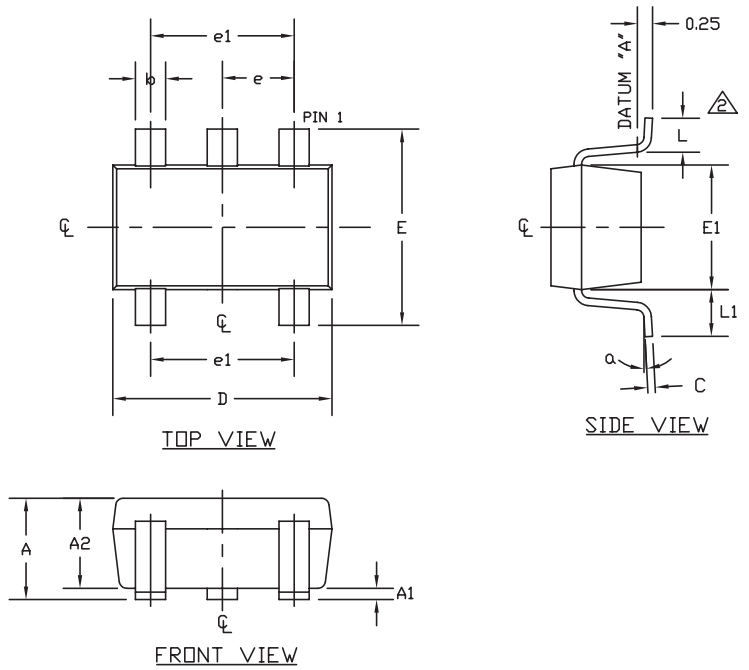

SYMBOL	MIN	MAX
A	0.90	1.45
A1	0.00	0.15
A2	0.90	1.30
b	0.35	0.50
C	0.08	0.20
D	2.80	3.00
E	2.60	3.00
E1	1.50	1.75
L	0.35	0.60
L1	0.60 REF	
e	0.95 BSC.	
e1	1.90 BSC.	
a	0°	8°

SOT-23 5L .EPS

NOTES:
1. ALL DIMENSIONS ARE IN MILLIMETERS.
2. FOOT LENGTH MEASURED AT INTERCEPT POINT BETWEEN DATUM A & LEAD SURFACE.
3. PACKAGE OUTLINE EXCLUSIVE OF MOLD FLASH & METAL BURR. MOLD FLASH, PROTRUSION OR METAL BURR SHOULD NOT EXCEED 0.25 MM.
4. PACKAGE OUTLINE INCLUSIVE OF SOLDER PLATING.
5. MEETS JEDEC MO178, VARIATION AA.
6. LEADS TO BE COPLANAR WITHIN 0.10 mm.
7. SOLDER THICKNESS MEASURED AT FLAT SECTION OF LEAD BETWEEN 0.08mm AND 0.15mm FROM LEAD TIP.

DALLAS SEMICONDUCTOR MAXIM
PROPRIETARY INFORMATION
TITLE: PACKAGE OUTLINE, SOT-23, 5L
APPROVAL | DOCUMENT CONTROL NO. 21-0057 | REV. E | 1/1

Package Information (continued)

(The package drawing(s) in this data sheet may not reflect the most current specifications. For the latest package outline information go to **www.maxim-ic.com/packages**.)

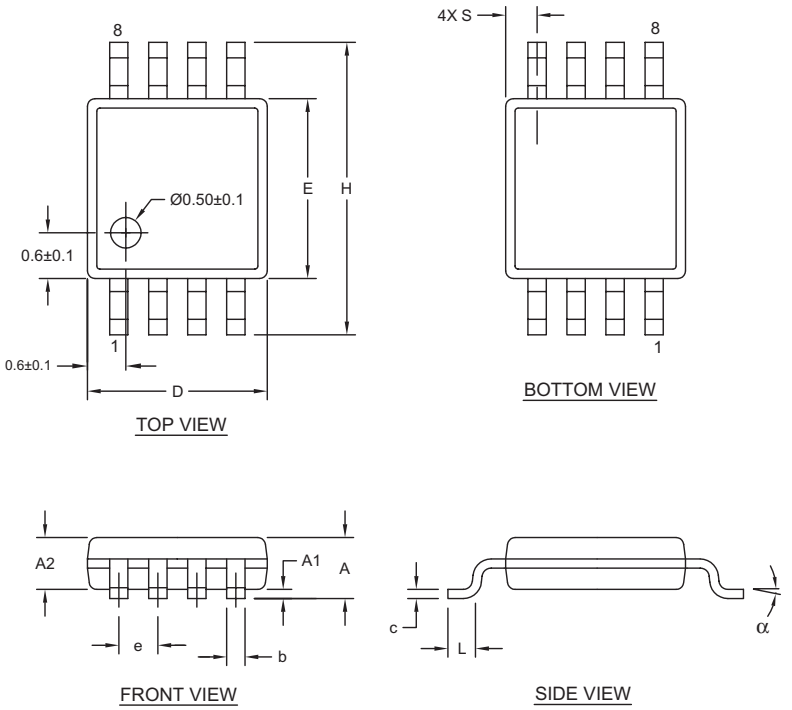

DIM	INCHES MIN	INCHES MAX	MILLIMETERS MIN	MILLIMETERS MAX
A	-	0.043	-	1.10
A1	0.002	0.006	0.05	0.15
A2	0.030	0.037	0.75	0.95
b	0.010	0.014	0.25	0.36
c	0.005	0.007	0.13	0.18
D	0.116	0.120	2.95	3.05
e	0.0256 BSC		0.65 BSC	
E	0.116	0.120	2.95	3.05
H	0.188	0.198	4.78	5.03
L	0.016	0.026	0.41	0.66
α	0∞	6∞	0∞	6∞
S	0.0207 BSC		0.5250 BSC	

8LUMAXD.EPS

NOTES:
1. D&E DO NOT INCLUDE MOLD FLASH.
2. MOLD FLASH OR PROTRUSIONS NOT TO EXCEED 0.15MM (.006").
3. CONTROLLING DIMENSION: MILLIMETERS.
4. MEETS JEDEC MO-187C-AA.

DALLAS SEMICONDUCTOR MAXIM

PROPRIETARY INFORMATION

TITLE: PACKAGE OUTLINE, 8L uMAX/uSOP

APPROVAL	DOCUMENT CONTROL NO.	REV.	
	21-0036	J	1/1

Single/Dual/Quad, Low-Cost, SOT23, Micropower, Rail-to-Rail I/O Op Amps

Package Information (continued)

(The package drawing(s) in this data sheet may not reflect the most current specifications. For the latest package outline information go to **www.maxim-ic.com/packages**.)

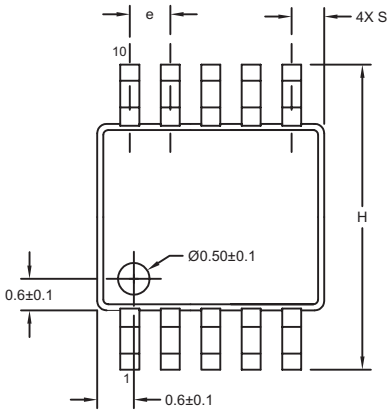

TOP VIEW

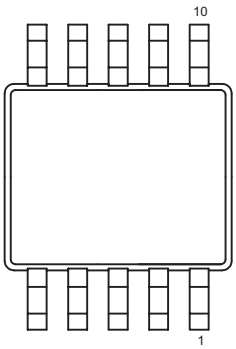

BOTTOM VIEW

	INCHES		MILLIMETERS	
DIM	MIN	MAX	MIN	MAX
A	-	0.043	-	1.10
A1	0.002	0.006	0.05	0.15
A2	0.030	0.037	0.75	0.95
D1	0.116	0.120	2.95	3.05
D2	0.114	0.118	2.89	3.00
E1	0.116	0.120	2.95	3.05
E2	0.114	0.118	2.89	3.00
H	0.187	0.199	4.75	5.05
L	0.0157	0.0275	0.40	0.70
L1	0.037 REF		0.940 REF	
b	0.007	0.0106	0.177	0.270
e	0.0197 BSC		0.500 BSC	
c	0.0035	0.0078	0.090	0.200
S	0.0196 REF		0.498 REF	
α	0°	6°	0°	6°

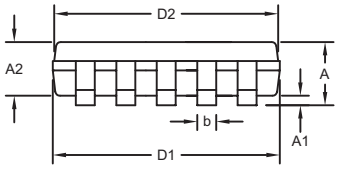

FRONT VIEW

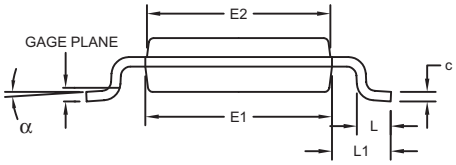

SIDE VIEW

NOTES:
1. D&E DO NOT INCLUDE MOLD FLASH.
2. MOLD FLASH OR PROTRUSIONS NOT TO EXCEED 0.15mm (.006").
3. CONTROLLING DIMENSION: MILLIMETERS.
4. MEETS JEDEC MO-187C-BA.

10LUMAX.EPS

DALLAS SEMICONDUCTOR MAXIM

PROPRIETARY INFORMATION

TITLE: PACKAGE OUTLINE, 10L uMAX/uSOP

APPROVAL	DOCUMENT CONTROL NO.	REV.	
	21-0061	I	1/1

Maxim cannot assume responsibility for use of any circuitry other than circuitry entirely embodied in a Maxim product. No circuit patent licenses are implied. Maxim reserves the right to change the circuitry and specifications without notice at any time.

© 2005 Maxim Integrated Products Printed USA MAXIM is a registered trademark of Maxim Integrated Products, Inc.