THIS DRAWING IS UNPUBLISHED. RELEASED FOR PUBLICATION AUGUST ,2006.
© COPYRIGHT 2006 BY TYCO ELECTRONICS CORPORATION. ALL RIGHTS RESERVED.

LOC	DIST
E	B

REVISIONS

P	LTR	DESCRIPTION	DATE	DWN	APVD
	C	ECR-06-018891	31AUG06	JMS	FWK

NOTES:

1. PACK IN ACCORDANCE WITH AMP SPEC 107-3275
2. 100 TRAY PACK IN ACCORDANCE WITH AMP SPEC 107-3275
3. Au PLATING
4. Ni PLATING
5. THIS ITEM MUST BE WHITE
6. ELECTRICAL CHARACTERISTICS
   - FREQUENCY RANGE: DC – 2 GHz
   - NOMINAL IMPEDANCE: 50 Ohm
   - INSULATION RESISTANCE: 5000 MOhm
   - WORKING VOLTAGE: 100 Volts RMS at Sea Level
   - DIELECTRIC WITHSTAND VOLTAGE: 1000 Volts RMS Max
   - CONTACT RESISTANCE:
   - CENTRE CONTACT: 10.00 mOhm Max
   - OUTER CONTACT: 5.00 mOhm Max
   - VSWR @ 1.8GHz: N/A
   - INSERTION LOSS dB @ x 1.8 GHz: 0.20 Max
7. MECHANICAL CHARACTERISTICS
   - COUPLING NUT RETENTION FORCE: 445N Min
   - DURABILITY: 500 Cycles Min
8. ENVIRONMENTAL CHARACTERISTICS
   - OPERATING TEMPERATURE: –55 to +85 DegC
9. FOR TECHNICAL DATA REFER TO YOUR LOCAL TYCO ELECTRONICS SALES OFFICE
10. ALL DIMENSIONS ARE NOMINAL FOR REFERENCE ONLY UNLESS OTHERWISE STATED

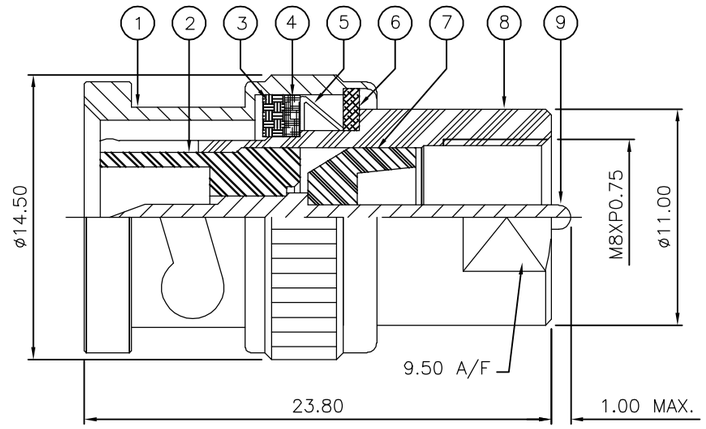

QUANTITY PER ASSY				PARTS LIST		
		1	1	BRASS (3)	CONTACT	9
		1	1	BRASS (4)	BODY	8
		1	1	PTFE	INSULATION	7
		1	1	STEEL (4)	WASHER	6
		1	1	STEEL (4)	SPRING	5
		1	1	BRASS (4)	RETAINING RING	4
		1	1	SILICONE RUBBER (5)	GASKET	3
		1	1	PTFE	INSULATION	2
		1	1	BRASS (4)	SHELL	1
		6--0	1--0	MATERIAL	DESCRIPTION	ITEM
		(2)	(1)			

THIS DRAWING IS A CONTROLLED DOCUMENT.

DIMENSIONS: mm

TOLERANCES UNLESS OTHERWISE SPECIFIED:
0 PLC ± –
1 PLC ± –
2 PLC ± –
3 PLC ± –
4 PLC ± –
ANGLES ± –

MATERIAL: SEE TABLE

FINISH: –

DWN J.SANDWELL 31AUG06
CHK S.PARLOW 31AUG06
APVD F.WHEELER-KING 31AUG06
PRODUCT SPEC –
APPLICATION SPEC –
WEIGHT –

tyco Electronics
Tyco Electronics Corporation
Bideford EX39 4HE

NAME: STRAIGHT ADAPTOR FME PLUG – BNC PLUG 50 OHM
–
–

SIZE	CAGE CODE	DRAWING NO	RESTRICTED TO
A3	00779	C-1337562	–

CUSTOMER DRAWING

SCALE NTS | SHEET 1 OF 1 | REV C