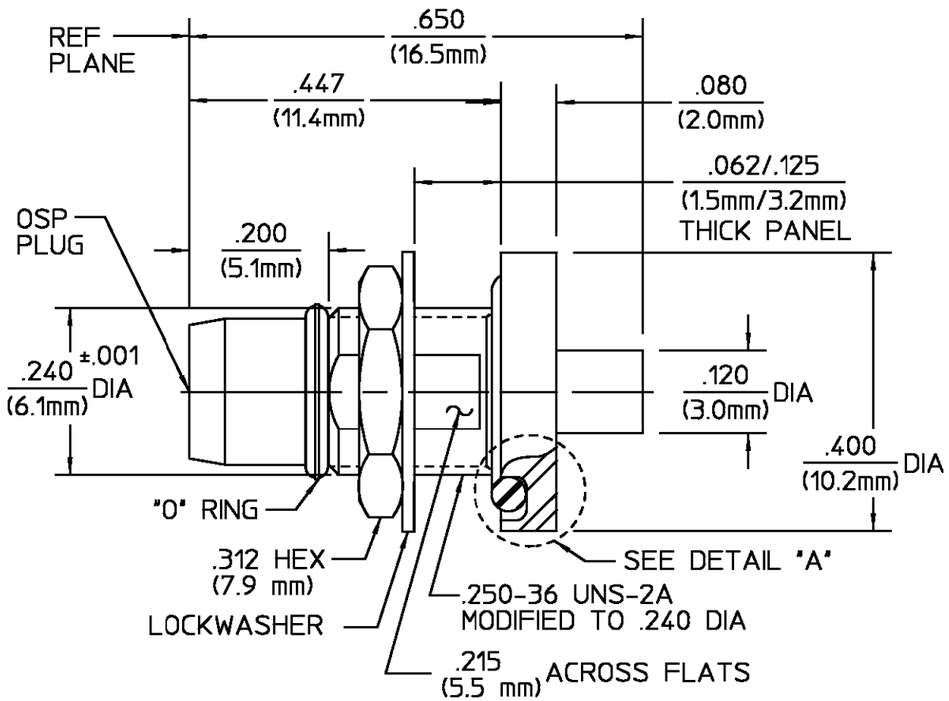

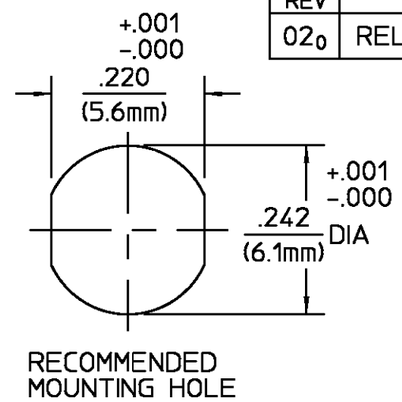

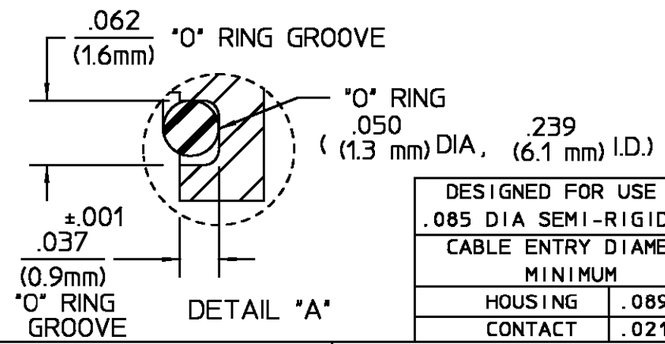

REVISIONS			
REV	DESCRIPTION	DATE	APPROVED
02_0	RELEASED BB	4/26/93	M.M. 4/28/93

DESIGNED FOR USE WITH .085 DIA SEMI-RIGID CABLE	
CABLE ENTRY DIAMETER MINIMUM	
HOUSING	.089
CONTACT	.021

ELECTRICAL	
Nominal Impedance (Ohms)	50 ±1
Frequency Range (GHz)	DC to 2.0
Volt Rating (VRMS MAX)	
@ Sea Level	335
VSWR	1.10+.01f(GHz) DC to 2.0 GHz
Insertion Loss (dB MAX)	$.03x\sqrt{f(GHz)}$
RF Leakage (dB MIN) (Interface Only, Fully Mated)	-(85-f(GHz))
Corona, 70,000 Ft (VRMS MIN)	250
Dielectric Withstanding Voltage (VRMS MIN) @ Sea Level	1000
Contact Resistance (Milliohms MAX)	
Center Contact	2.0
Outer Contact	2.0
Cable to Housing	0.5
RF High Potential @ Sea Level (VRMS MIN @ 5 MHz)	670
I.R.(Megohms MIN)	5000

MECHANICAL	
Interface Dimensions	OMNI-SPECTRA CATALOG
Mating Characteristics:	
Insertion (MAX Lbs)	N/A
Withdrawal (MIN Oz)	N/A
Force to Engage (In-Lbs MAX)	3
& Disengage (In-Lbs MAX)	1.5
Center Contact Captivation Axial (Lbs)	6
Cable Retention	
Axial Force (Lbs MIN)	30
Torque (In-Oz MIN)	16
Weight (Grams)	TBD
Hermetic Seal	1×10^{-5} cc/sec/atm

ENVIRONMENTAL
Temperature Rating -65° to +125°C
Vibration MIL-STD-202, Method 204, Condition D, 20 G'S
Shock MIL-STD-202, Method 213, Condition I, 100G's
Thermal Shock MIL-STD-202, Method 107, Condition B Except High Temperature Shall Be 115°
Moisture Resistance MIL-STD-202, Method 106, Except Step 7B Shall Be Omitted
Corrosion - MIL-STD-202, Method 101, Condition B

COMPONENT	MATERIAL	FINISH
HOUSING	STAINLESS STEEL PER ASTM-A484 AND ASTM-A582, TYPE 303	PASSIVATE PER ASTM-A380 EXCEPT CABLE TERMINATION AREA TO BE GOLD PLAT PER MIL-G-45204 OVER NICKEL PLATE PER QQ-N-290
BUSHING MOUNTING NUT LOCKWASHER	STAINLESS STEEL PER ASTM-A484 AND ASTM-A582, TYPE 303	PASSIVATE PER ASTM-A380
DIELECTRIC	TFE FLUOROCARBON PER ASTM-D-1457	N/A
CENTER CONTACT	BERYLLIUM COPPER PER ASTM B 196, ALLOY C17300, CONDITION H	GOLD PLATE PER MIL-G-45204 OVER COPPER PLATE PER MIL-C-14550
O-RING INTERNAL	SILICONE RUBBER PER ZZ-R-765	N/A
O-RING EXTERNAL	NITRILE (BUNA-N) PER MIL-P-25732	N/A

UNLESS OTHERWISE SPECIFIED DIMENSIONS ARE IN INCHES
TOLERANCE ON
FRAC. ± 1/64 DEC. ±.005 ANGLES ± 1°

DRAWN BY D.CAM DATE 7/10/92
CHECKED BY
APPD BY T.DOWNS 10/12/92

AMP

AMP Incorporated
140 Fourth Avenue
Waltham, MA 02451-7599

These drawings and specifications are the property of Omni Spectra Incorporated and shall not be reproduced or copied or used in whole or in part as the basis for the manufacture or sale of item(s) without written permission.

USE ASS'Y PROCEDURE

NO. A.P. 45-144
408-04609

TITLE OSP BULKHEAD FEEDTHROUGH CABLE PLUG DIRECT SOLDER ATTACHMENT

SIZE	CODE IDENT NO.		REV
B	26805	4503-5058-24	02_0
SCALE 5:1			SHEET 1 OF 1

CUSTOMER DRAWING

AMP PART # 1046494-1
SHEET 1 OF 1 REV A