THIS DRAWING IS UNPUBLISHED. RELEASED FOR PUBLICATION 20
© COPYRIGHT 20 BY - ALL RIGHTS RESERVED.

REVISIONS

P	LTR	DESCRIPTION	DATE	DWN	APVD
	A	FIRST ISSUE	07APR2014	SDM	A.P.

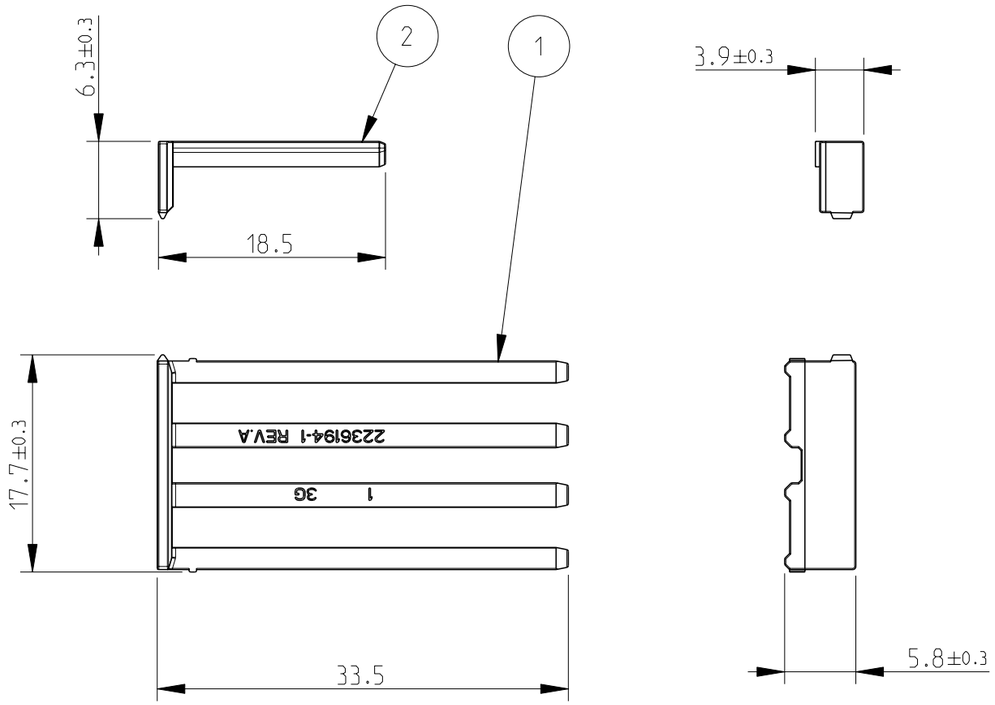

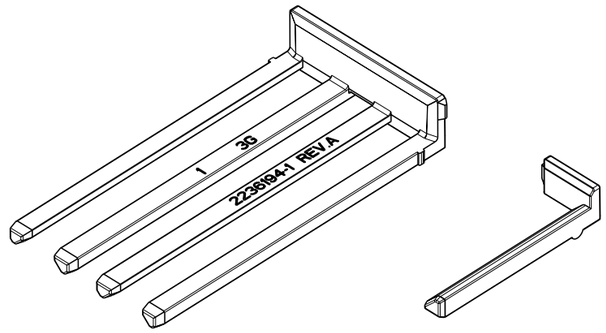

0-2236048-1	1	SECONDARY LOCK FOR AMP MCP 4.8/6.3 CTCs	PA66GF	RED	2
	1	SECONDARY LOCK FOR MCON 1.2 & 2.8 CTCs	PA66GF	RED	1
	Q.TY	DESCRIPTION	MATERIAL	COLOUR	ITEM

NOTE:

1) MATERIAL: SEE TABLE

2) PARTS SUPPLIED SEPARATELY IN SAME QUANTITIES IN DIFFERENT PLASTIC BAGS AND IN THE SAME CARTON BOX

P/N 2236048-1 AS SHOWN

THIS DRAWING IS A CONTROLLED DOCUMENT.

DIMENSIONS: mm

TOLERANCES UNLESS OTHERWISE SPECIFIED:
0 PLC ±1
1 PLC ±0.7
2 PLC ±0.3
3 PLC ±
4 PLC ±
ANGLES ±

MATERIAL -
FINISH -

DWN S. Di Maggio 02MAY2013
CHK A. Plazio 02MAY2013
APVD - 02MAY2013
PRODUCT SPEC -
APPLICATION SPEC -
WEIGHT -

TE Connectivity

NAME SECONDARY LOCKS FOR 32 POS KIT

SIZE	CAGE CODE	DRAWING NO	RESTRICTED TO
A3	00779	C-2236048	-

Customer Drawing | SCALE 2:1 | SHEET 1 OF 1 | REV A

1470-19 (3/13)

Pro/ENGINEER DRAWING