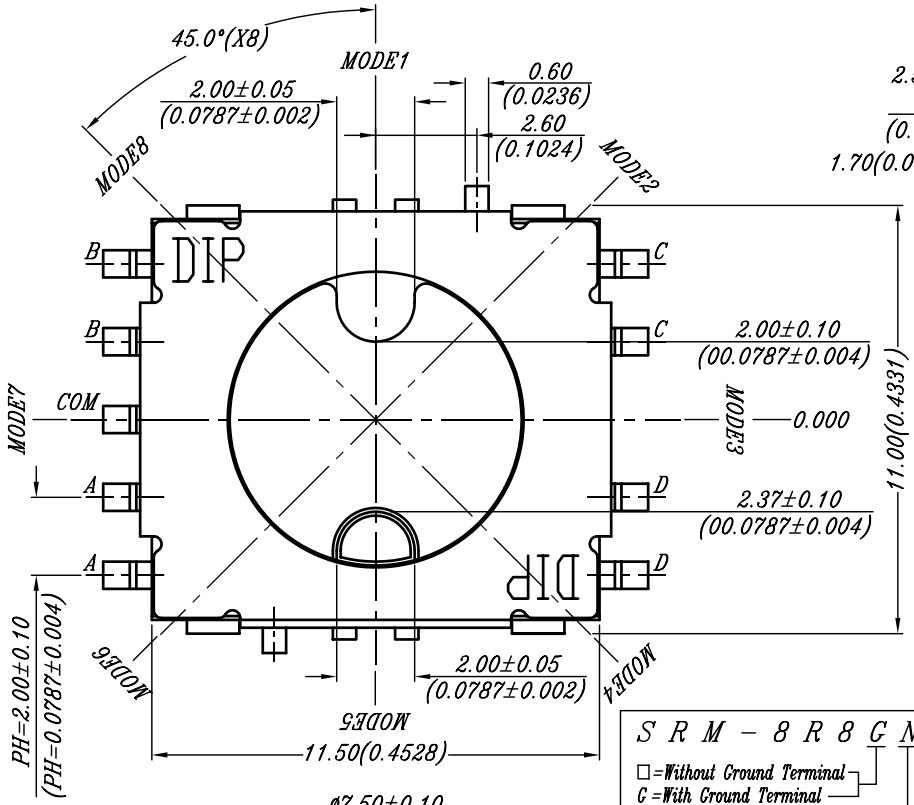

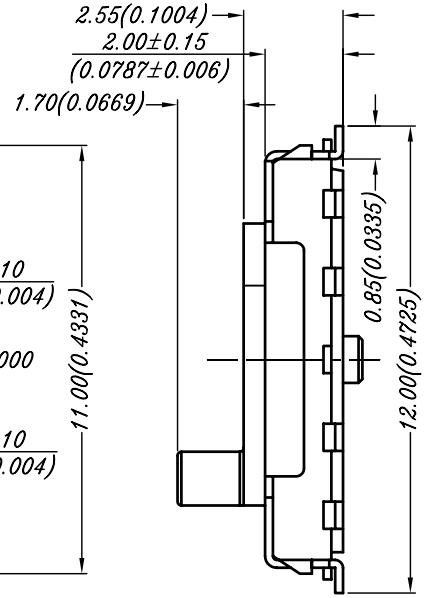

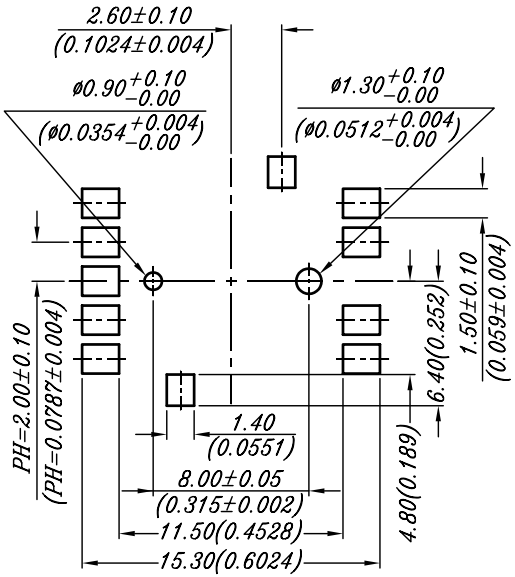

P.C.B LAYOUT

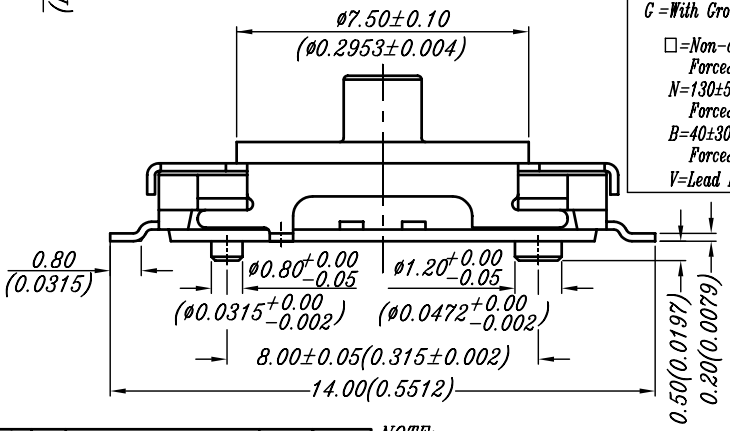

S R M − 8 R 8 G N − V

- G: □=Without Ground Terminal; C=With Ground Terminal
- N: □=Non-click,Actuation Force&Color:Black; N=130±50gf.cm,Actuation Force&Color:Brown; B=40±30gf.cm,Actuation Force&Color:Blue
- V: V=Lead Free

Changeover Timing

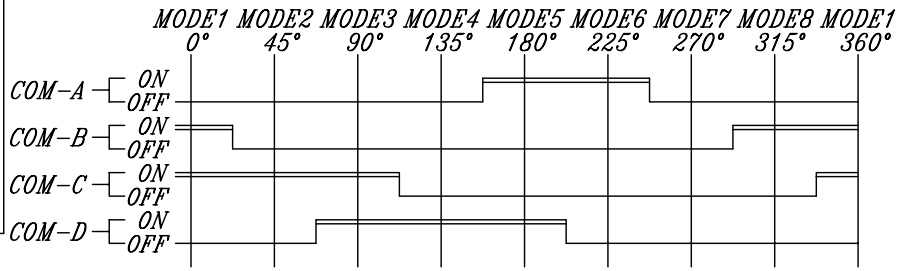

Changeover Angle

	MODE1	MODE2	MODE3	MODE4	MODE5	MODE6	MODE7	MODE8
COM-A	OFF	OFF	OFF	OFF	ON	ON	OFF	OFF
COM-B	ON	OFF	OFF	OFF	OFF	OFF	OFF	ON
COM-C	ON	ON	ON	OFF	OFF	OFF	OFF	OFF
COM-D	OFF	OFF	ON	ON	ON	OFF	OFF	OFF

NOTE:
1. ALL DIMENSIONS ARE IN MILLIMETERS,BRACKETED DIMENSIONS ARE IN INCHES.
2. GENERAL TOLERANCES MAX.±0.20mm.
3. SWITCHING SHOWN IN MODE5 POSITING

ZONE	REV.	DESCRIPTION	DATE	APPD.
	A	DWG.REL	03.25'05	邱明義

APPD: | Q'TY: | CHKD: | SCALE: | DR: 01.07'05 林后謙 | REV: A | UNITS: mm | DESIGN: 92.12.18 林后謙

圜達實業股份有限公司
DIPTRONICS MANUFCTURING INC.

PART NO: SRM-8R8□□-V | MAT'L: | FINISH:

PART NAME: ROTARY-8R

DWG NO: SRM-8R8-V