REVISION RECORD		
REV	DESCRIPTION	DRFT
1	ADD HEIGHT DIM OF TABS	VICTOR

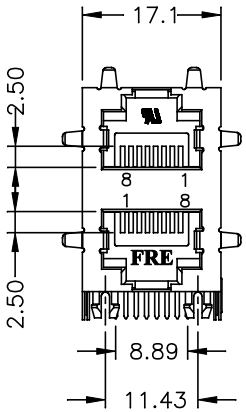

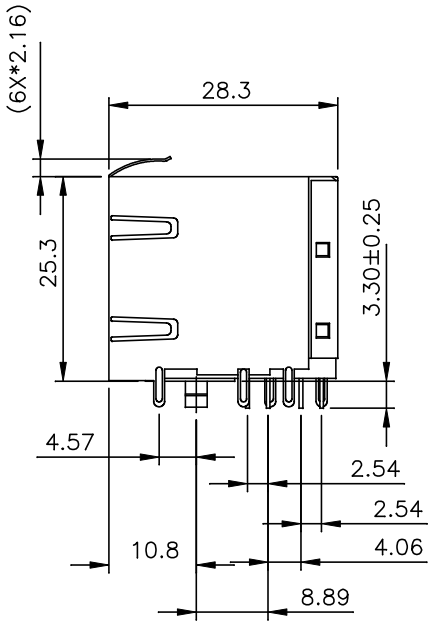

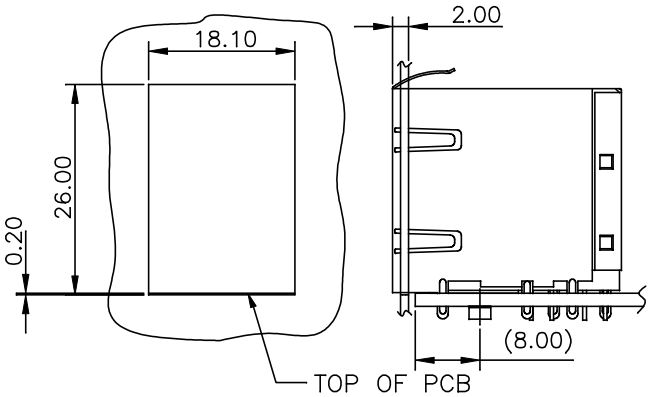

TOLERANCE:±0.10
RECOMMANDED PANNEL CUT OUT

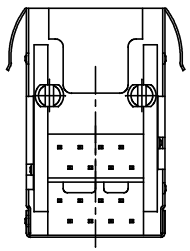

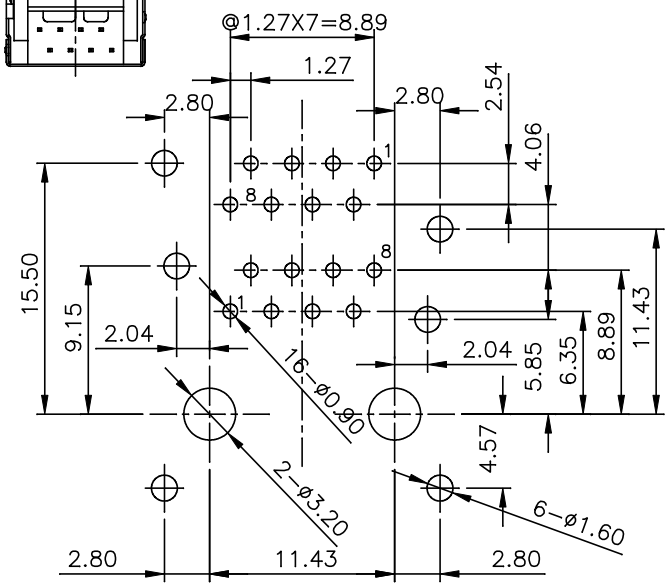

PC BOARD LAYOUT T=1.60mm
COMPONENT SIDE SHOWN
TOLERANCES±0.05mm

NOTES:

ELECTRICAL:

1. VOLTAGE RATING : 125 VAC RMS.
2. CURRENT RATING : 1.5 AMP.
3. CONTACT RESISTANCE : 60 MILLIOHMS MAX.
4. INSULATION RESISTANCE: 1000 MEGOHMS MIN @ 500 VDC.
5. DIELECTRIC STRENGTH : 1000 VDC RMS 60Hz, 1MIN.

MECHANICAL:

1. HOUSING MATERIAL : GLASS FIBER FILLED NYLON, UL94V-0/BLACK.
2. INSERT MATERIAL : GLASS FIBER FILLED NYLON, UL94V-0/BLACK.
3. CONTACT MATERIAL : PHOSPHOR BRONZE t=0.35mm.
4. SHIELD MATERIAL : COPPER ALLOY WITH NICKEL PLATING.
5. PLATING : GOLD PLATING OVER NICKEL.
6. OPERATING LIFE : 750 CYCLES MIN.
7. PCB RETENTION PRE-SOLDER : 1 LB MIN.
8. PCB RETENTION POST-SOLDER: 10 LBS MIN.

ENVIRONMENTAL:

1. STORAGE : -40°C TO +85°C.
2. OPERATION: -40°C TO +85°C.
3. WAVE SOLDERING TEMPERATURE: 255°C~265°C (5~10 SECONDS).
4. RoHS COMPLIANT.

MATES WITH MODULAR PLUG CONFORMING TO
FCC PART 68, SUBPART F.
CUL FILE NO. E163191.

E5908-4V0S54-L	30u"
PART NO.	Au PLATING

MM (INCH)
TOLERANCES EXCEPT AS NOTED

MM	
.0 ± 0.25	±
.00 ± 0.20	±
.000 ± 0.10	±

ANGLES ± 1°

THIRD ANGLE PROJECTION

DETACHED LISTS

RoHS Compliant

Pulse Electronics

TITLE
STAMPED PIN III W/SHIELD JACK, 2X1

DFTO : ELLA	DRAWING NO. CE5908-4V0S5X-L	SIZE A3	REV 1
DATE : 11/07/2012	/PART NO. E5908-4V0S54-L		
SCALE : 1.5:1	DO NOT SCALE DRAWING	SHEET 1 OF 1	