List of "HFW__R-1/2STAE1LF" customer document

DOCUMENT NO.	LIST
SC-HFWR03	SPEC.
JSA96453	CAT NO.TABLE FOR 1mm SPACING SMT CONNECTOR (HFW__R-1/2STA__LF)
JSA96454	1mm SPACING SURFACE MOUNT FPC CONNECCTOR (HFW__R-1STA_LF)
JSA96455	1mm SPACING SURFACE MOUNT FPC CONNECCTOR (HFW__R-2STA_LF)
JSA96456	CAT.NO.TABLE FOR PLASTIC TAPE PACKAGED 1mm SPACING SMT CONN.(HFW__R-1/2STAE1LF)
JSA96457	1mm SPACING SMT CONNECTOR (HFW__R-1STAE1LF)
JSA96458	1mm SPACING SMT CONNECTOR (HFW__R-2STAE1LF)
JSA96459	RECOMMENDED CABLE (FPC) (HFW__R-1/2STA)
BJM-HFWR101	HANDLING PROCEDURES

Copyright FCI.
FCIconnect.com

mat'l. code	surface 58 ISO 1302	tolerance ISO 406 ISO 1101	projection	product family 58NF	CODE JP
	tolerances unless otherwise specified				

ltr	ecn no	dr	date
A	J05-0322	H.T	6/3/'05
B	J06-0413	H.T	10/4/'06
C	J07-0161	H.T	3/15/'07

angles | linear | mm | scale X

title: 1mm SPACING FPC/FFC CONNECTOR DOCUMENT LIST (Cat. No. : HFW__R-1/2STAE1LF)

dr	[signature]	3/15/'07
engr	[signature]	3/15/'07
chr	R. Shouji	3/19/'07
appd	[signature]	3/19/'07

dwg no: JSA 96452 | sheet 1 of 1 | size A4

type: Product Customer Drawing

sheet index	revision	C	Rev. C
	sheet	1	

form: A4

PDM: Rev:C STATUS:Released Printed: Feb 18, 2008

CAT. NO. & DIMENSIONS

(NOTE3)	NO. OF CONTACTS (n)	CAT. NO.	DIMENSIONS (NOTE2) A ± 0.2	B ± 0.2	C ± 0.1
	4	HFW4R-1/2STA__LF	6.6	3	5.14
	5	HFW5R-1/2STA__LF	7.6	4	6.14
	6	HFW6R-1/2STA__LF	8.6	5	7.14
	7	HFW7R-1/2STA__LF	9.6	6	8.14
	8	HFW8R-1/2STA__LF	10.6	7	9.14
	9	HFW9R-1/2STA__LF	11.6	8	10.14
	10	HFW10R-1/2STA__LF	12.6	9	11.14
	11	HFW11R-1/2STA__LF	13.6	10	12.14
	12	HFW12R-1/2STA__LF	14.6	11	13.14
	13	HFW13R-1/2STA__LF	15.6	12	14.14
	14	HFW14R-1/2STA__LF	16.6	13	15.14
	15	HFW15R-1/2STA__LF	17.6	14	16.14
	16	HFW16R-1/2STA__LF	18.6	15	17.14
	17	HFW17R-1/2STA__LF	19.6	16	18.14
	18	HFW18R-1/2STA__LF	20.6	17	19.14
	19	HFW19R-1/2STA__LF	21.6	18	20.14
	20	HFW20R-1/2STA__LF	22.6	19	21.14
	21	HFW21R-1/2STA__LF	23.6	20	22.14
	22	HFW22R-1/2STA__LF	24.6	21	23.14
	23	HFW23R-1/2STA__LF	25.6	22	24.14
	24	HFW24R-1/2STA__LF	26.6	23	25.14
	25	HFW25R-1/2STA__LF	27.6	24	26.14
	26	HFW26R-1/2STA__LF	28.6	25	27.14
	27	HFW27R-1/2STA__LF	29.6	26	28.14
*	28	HFW28R-1/2STA__LF	30.6	27	29.14
*	29	HFW29R-1/2STA__LF	31.6	28	30.14
	30	HFW30R-1/2STA__LF	32.6	29	31.14

CAT. NO. HFW (n) R - 1 ST A __ LF

- SERIES
- NO. OF CONTACTS
- RIGHT ANGLE TYPE
- FOR FPC/FFC, CONTACT DIRECTION
  1. LOWER CONTACT TYPE
  2. UPPER CONTACT TYPE
- FOR AUTOMATIC MOUNTING (SMT)
- GOLD PLATING
- PACKAGE STYLE
- LEAD FREE

NOTES

1. THIS PRODUCT IS THE CONNECTOR DESIGNED TO TERMINATE FPC AND COPES WITH AUTOMATIC MOUNTING (SMT).
2. SEE PART DRAWINGS FOR DIMENSIONS A~C.
3. PLEASE CONSULT US IN CASE OF USING PARTS WITH * MARK.

mat'l. code	surface 58 ISO 1302	tolerance ISO 406 ISO 1101	projection	product family 58NF	CODE JP
ltr / ecn no / dr / date	tolerances unless otherwise specified		mm	title CAT NO.TABLE FOR 1mm SPACING SMT CONNECTOR (Cat.No. HFW__R-1/2STA__LF)	
A / J05-0322 / H.T / 6/3/'05	angles / linear				
B / J06-0413 / H.T / 10/4/'06			scale X		
	dr	10/4/06	FCI	dwg no JSA 96453	sheet 1 of 1 / size A4
	engr	10/4/06			
	chr	10/12/06			
	appd	10/12/06		type Product Customer Drawing	
sheet index / revision B / sheet 1					Rev. B

SC-HFWR 03 JSA 96454 96455 96456 96457 96458 96459
form: A4

FCIconnect.com
Copyright FCI.

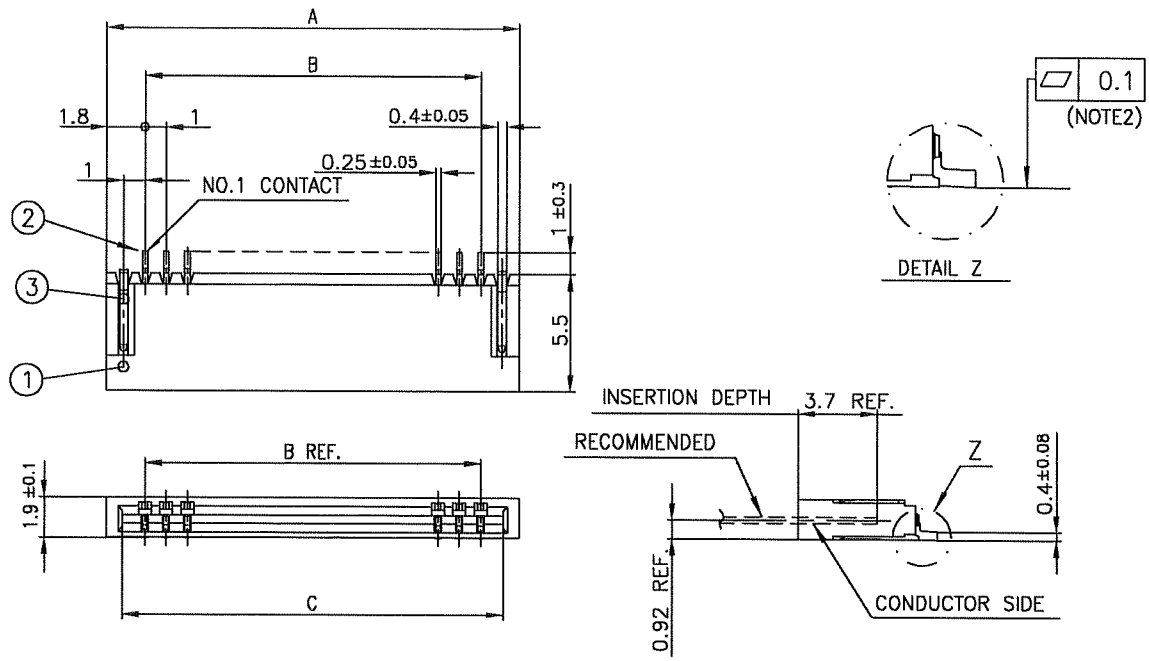

PT. NO.	PARTS NAME	MATERIAL	Q'TY	NOTE
1	HOUSING	PA6T RESIN GLASS REINFORCED (UL94V-0)	1	COLOR:BLACK
2	CONTACT	PHOSPHOR BRONZE	n	PLATING:GOLD
3	MOUNTING PLATE		2	PLATING:TIN

n : NO. OF CONTACTS

RECOMMENDED PC BOARD LAYOUT
(COMPONENT SIDE)

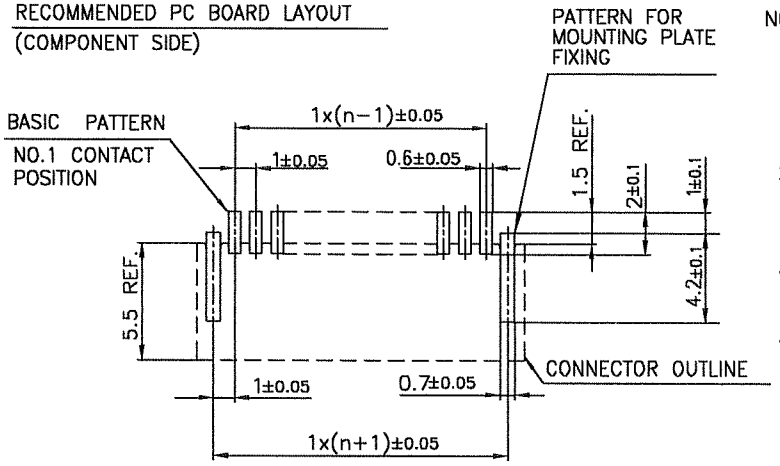

NOTES

1. THIS PRODUCT IS THE CONNECTOR DESIGNED TO TERMINATE FPC AND COPES WITH AUTOMATIC MOUNTING (SMT).
2. FLATNESS OF CONTACT TERMINAL FOR HOUSING MUST BE WITHIN TOLERANCE IN Z PORTION DETAILED DRAWING.
3. THIS PRODUCT IS LOWER CONTACT TYPE CONNECTOR.
4. THIS PRODUCT MEETS EUROPEAN UNION DIRECTIVES AND OTHER COUNTRY REGULATIONS AS DESCRIBED IN GS-22-008
5. THE HOUSING WILL WITHSTAND EXPOSURE TO 260°C PEAK TEMPERATURE FOR 10 SECONDS IN A REFLOW SOLDERING OVEN.

mat'l. code				surface 58 ISO 1302	tolerance ISO 406 ISO 1101	projection	product family 58NF	CODE JP
ltr	ecn no	dr	date	tolerances unless otherwise specified			title 1mm SPACING SURFACE MOUNT FPC CONNECTOR (Cat.No. HFW__R-1STA__LF)
A	J05-0322	H.T	6/3/'05	angles	linear ±0.2	mm	
B	J05-0732	H.T	10/28/'05				
C	J06-0413	H.T	10/4/'06			scale X	
				dr	10/4/06	FCI	dwg no JSA 96454 sheet 1 of 1	size A4
				engr	10/4/06		
				chr	10/12/06		
				appd	10/12/06		type Product Customer Drawing
sheet index	revision	C					Rev. C
	sheet	1					

SC-HFWR 03 JSA96453
form: A4

FCIconnect.com
Copyright FCI.

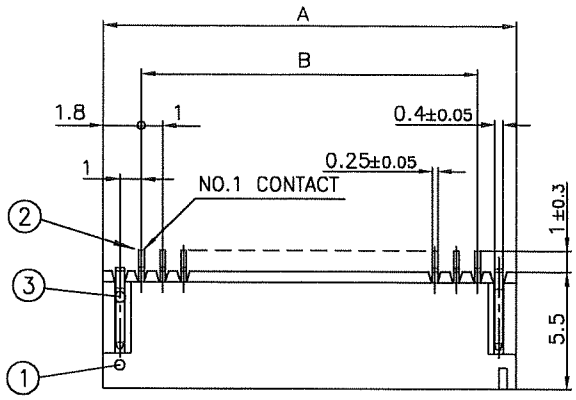

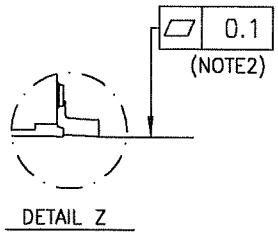

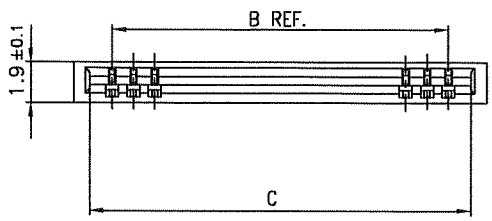

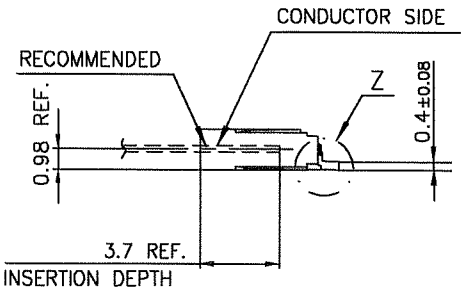

PT. NO.	PARTS NAME	MATERIAL	Q'TY	NOTE
1	HOUSING	PA6T RESIN GLASS REINFORCED (UL94V-0)	1	COLOR:BLACK
2	CONTACT	PHOSPHOR BRONZE	n	PLATING:GOLD
3	MOUNTING PLATE		2	PLATING:TIN

n : NO. OF CONTACTS

RECOMMENDED PC BOARD LAYOUT
(COMPONENT SIDE)

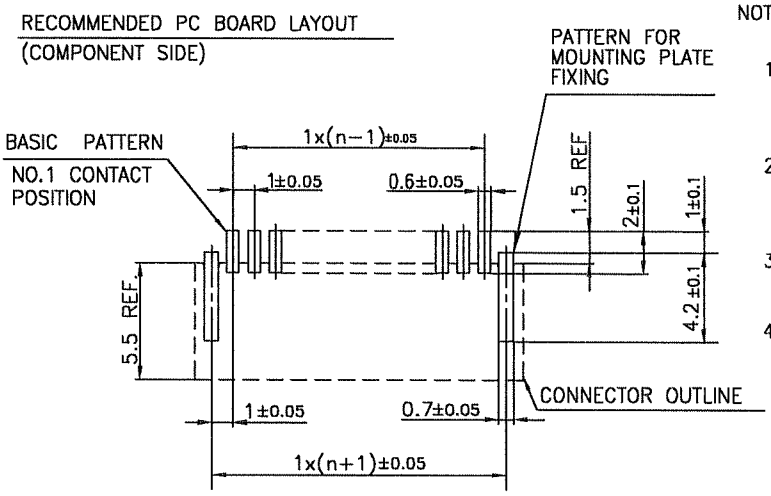

NOTES

THIS PRODUCT IS THE CONNECTOR

1. DESIGNED TO TERMINATE FPC AND COPES WITH AUTOMATIC MOUNTING (SMT).
2. FLATNESS OF CONTACT TERMINAL FOR HOUSING MUST BE WITHIN TOLERANCE IN Z PORTION DETAILED DRAWING.
3. THIS PRODUCT IS UPPER CONTACT TYPE CONNECTOR.
4. THIS PRODUCT MEETS EUROPEAN UNION DIRECTIVES AND OTHER COUNTRY REGULATIONS AS DESCRIBED IN GS-22-008
5. THE HOUSING WILL WITHSTAND EXPOSURE TO 260°C PEAK TEMPERATURE FOR 10 SECONDS IN A REFLOW SOLDERING OVEN.

Copyright FCI.
FCIconnect.com

mat'l. code				surface 58 ISO 1302	tolerance ISO 406 ISO 1101	projection	product family 58NF	CODE JP
ltr	ecn no	dr	date	tolerances unless otherwise specified			title	
A	J05-0322	H.T	6/3/'05	angles	linear ±0.2	mm	1mm SPACING SURFACE MOUNT FPC CONNECTOR (Cat.No. HFW__R-2STA__LF)	
B	J05-0732	H.T	10/28/'05					
C	J06-0413	H.T	10/4/'06			scale ℵ		
				dr	10/4/06		dwg no JSA 96455	sheet 1 of 1 size A4
				engr	10/4/06			
				chr	10/12/06			
				appd	10/12/06		type Product Customer Drawing	

sheet index	revision	C	Rev. C
	sheet	1	

SC-HFWR 03 JSA96453
form: A4

PDM: Rev:C STATUS:Released Printed: Feb 18, 2008

CAT. NO. & DIMENSIONS

(NOTE4)	NO. OF CONTACTS (n)	CAT. NO. (NOTE2)	DIMENSIONS (NOTE3) E ± 5	F ± 0.3	G ± 0.1
	4	HFW4R-1/2STAE1LF	28.4	24	—
	5	HFW5R-1/2STAE1LF	28.4	24	—
	6	HFW6R-1/2STAE1LF	28.4	24	—
	7	HFW7R-1/2STAE1LF	28.4	24	—
	8	HFW8R-1/2STAE1LF	28.4	24	—
	9	HFW9R-1/2STAE1LF	28.4	24	—
	10	HFW10R-1/2STAE1LF	28.4	24	—
	11	HFW11R-1/2STAE1LF	28.4	24	—
	12	HFW12R-1/2STAE1LF	28.4	24	—
	13	HFW13R-1/2STAE1LF	28.4	24	—
	14	HFW14R-1/2STAE1LF	28.4	24	—
	15	HFW15R-1/2STAE1LF	36.4	32	28.4
	16	HFW16R-1/2STAE1LF	36.4	32	28.4
	17	HFW17R-1/2STAE1LF	36.4	32	28.4
	18	HFW18R-1/2STAE1LF	36.4	32	28.4
	19	HFW19R-1/2STAE1LF	48.4	44	40.4
	20	HFW20R-1/2STAE1LF	48.4	44	40.4
	21	HFW21R-1/2STAE1LF	48.4	44	40.4
	22	HFW22R-1/2STAE1LF	48.4	44	40.4
	23	HFW23R-1/2STAE1LF	48.4	44	40.4
	24	HFW24R-1/2STAE1LF	48.4	44	40.4
	25	HFW25R-1/2STAE1LF	48.4	44	40.4
	26	HFW26R-1/2STAE1LF	48.4	44	40.4
	27	HFW27R-1/2STAE1LF	48.4	44	40.4
*	28	HFW28R-1/2STAE1LF	48.4	44	40.4
*	29	HFW29R-1/2STAE1LF	48.4	44	40.4
	30	HFW30R-1/2STAE1LF	60.4	56	52.4

CAT. NO. HFW (n) R -1 ST A E1 LF

- HFW — SERIES
- (n) — NO. OF CONTACTS
- R — RIGHT ANGLE TYPE
- -1 — FOR FPC/FFC, CONTACT DIRECTION
  1. LOWER CONTACT TYPE
  2. UPPER CONTACT TYPE
- ST — FOR AUTOMATIC MOUNTING (SMT)
- A — GOLD PLATING
- E1 — TAPE PACKAGING
- LF — LEAD FREE

NOTES

1. THIS PRODUCT IS THE CONNECTOR DESIGNED TO TERMINATE FPC AND COPES WITH AUTOMATIC MOUNTING (SMT).
2. THIS CATALOG NO. INDICATES PLASTIC TAPE PACKAGED CONNECTOR.
3. SEE PART DRAWINGS FOR DIMENSIONS E~G.
4. PLEASE CONSULT US IN CASE OF USING PARTS WITH * MARK.

ltr	ecn no	dr	date
A	J05-0322	H.T	6/3/'05
B	J06-0413	H.T	10/4/'06

mat'l. code

surface 58 ISO 1302

tolerance ISO 406 ISO 1101

tolerances unless otherwise specified: angles, linear

projection

mm

scale X

dr 10/4/06
engr 10/4/06
chr 10/12/06
appd 10/12/06

product family 58NF

CODE JP

title: CAT. NO. TABLE FOR PLASTIC TAPE PACKAGED 1mm SPACING SMT CONN (Cat.No. HFW__R-1/2STAE1LF)

dwg no JSA 96456 sheet 1 of 1

size A4

type Product Customer Drawing

sheet index	revision	B
	sheet	1

Rev. B

SC-HFWR03 JSA96453
form: A4

Copyright FCI.
FCIconnect.com

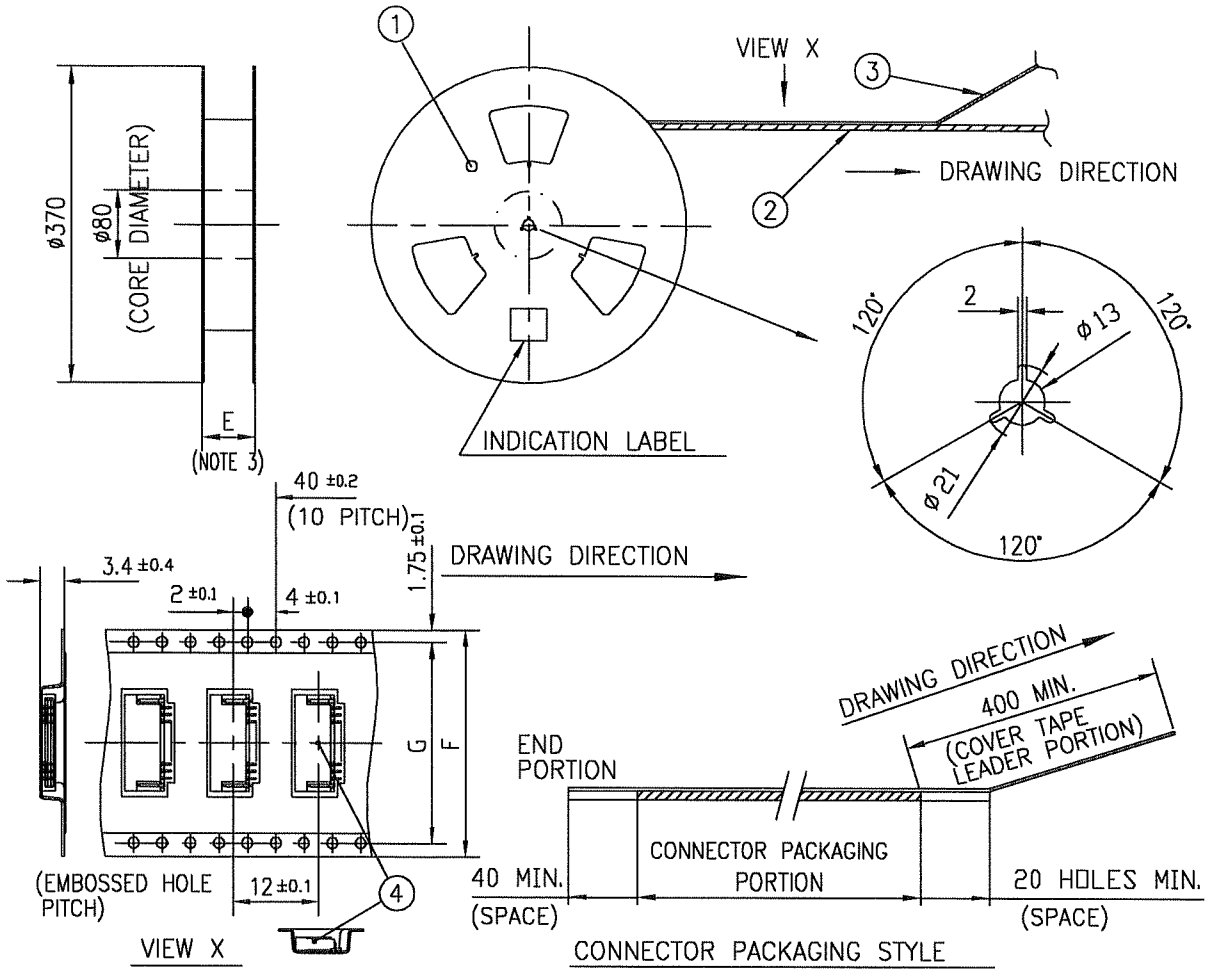

VIEW X

CONNECTOR PACKAGING STYLE

PT. NO.	PARTS NAME	CAT. NO.	MATERIAL	Q'TY	NOTE
1	REEL	———	CARDBOARD	1	COLOR:WHITE
2	PLASTIC (EMBOSSED) TAPE	———	PET	——	COLOR:TRANSPARENCY
3	COVER	———	POLYESTER	——	COLOR:TRANSPARENCY
4	CONNECTOR	HFW__R-1STA__LF	SEE ATTACHED DWG.	2000	LOWER CONTACT TYPE

NOTES

1. THIS IS PLASTIC TAPE PACKAGED CONNECTOR DESIGNED TO TERMINATE FPC AND COPES WITH AUTOMATIC MOUNTING (SMT).
2. SEE JIS C 0806 (PACKING OF ELECTRONIC COMPONENTS ON CONTINUOUS TAPES (SURFACE MOUNTING DEVICES)) FOR SHAPE AND DIMENSIONS OF PLASTIC (EMBOSSED) TAPE AND REEL.
3. E DIMENSION IS PORTION OF THE CORE.

ltr	ecn no	dr	date
A	J05-0322	H.T	6/3/'05
B	J06-0413	H.T	10/4/'06

mat'l. code

surface 58 ISO 1302

tolerance ISO 406 ISO 1101

tolerances unless otherwise specified: angles ±5°; linear ±5

projection

mm

scale X

dr 10/4/06

engr 10/4/06

chr 10/12/06

appd 10/12/06

product family 58NF

CODE JP

title: 1mm SPACING SMT CONNECTOR (Cat.No. HFW__R-1STAE1LF)

dwg no JSA 96457

sheet 1 of 1

size A4

type Product Customer Drawing

sheet index	revision	B
	sheet	1

Rev. B

SC-HFWR 03 JSA96453
form: A4

FCIconnect.com
Copyright FCI.

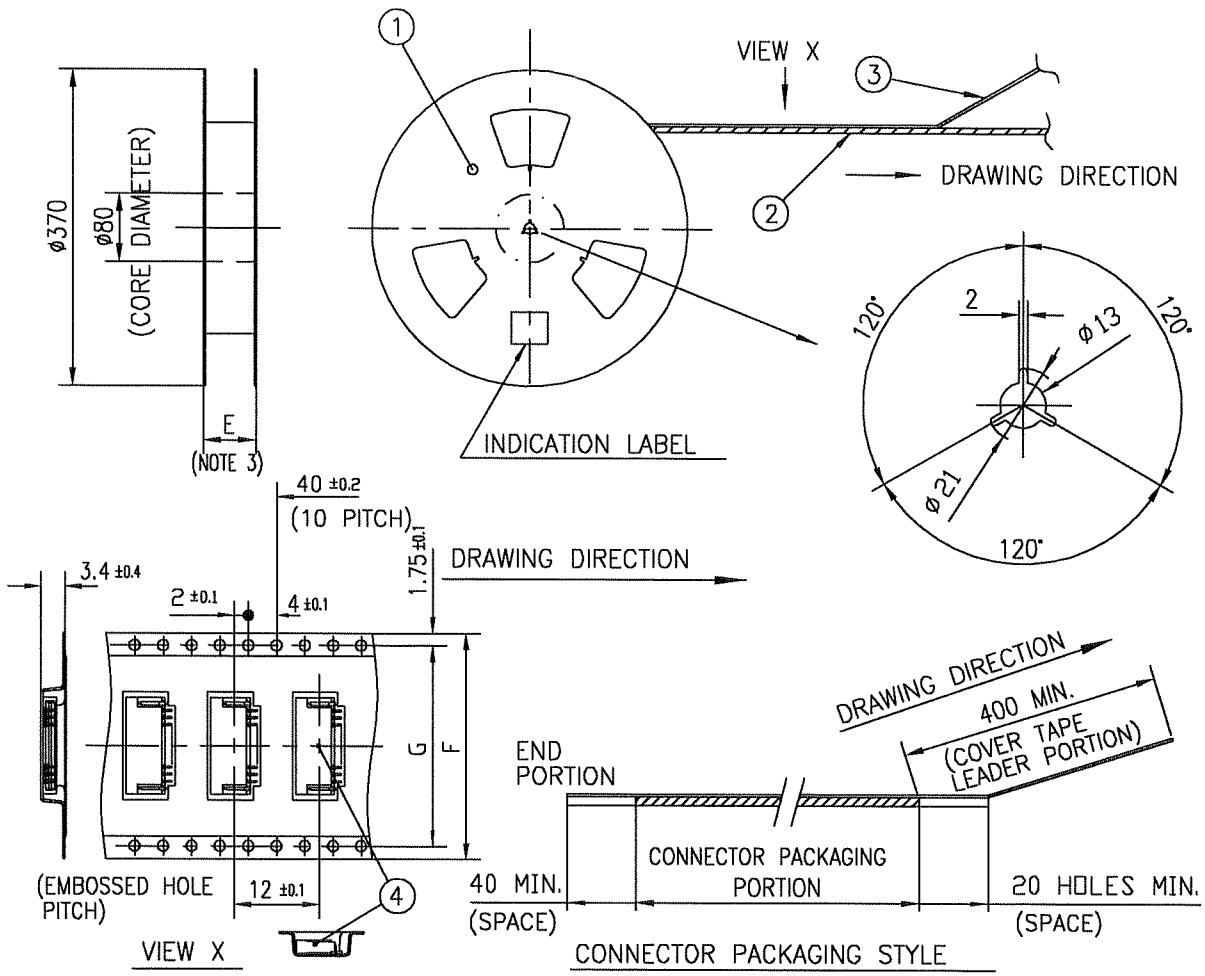

PT. NO.	PARTS NAME	CAT. NO.	MATERIAL	Q'TY	NOTE
1	REEL	———	CARDBOARD	1	COLOR:WHITE
2	PLASTIC (EMBOSSED) TAPE	———	PET	——	COLOR:TRANSPARENCY
3	COVER	———	POLYESTER	——	COLOR:TRANSPARENCY
4	CONNECTOR	HFW__R-2STA__-LF	SEE ATTACHED DWG.	2000	UPPER CONTACT TYPE

NOTES

1. THIS IS PLASTIC TAPE PACKAGED CONNECTOR DESIGNED TO TERMINATE FPC AND COPES WITH AUTOMATIC MOUNTING (SMT).
2. SEE JIS C 0806 (PACKING OF ELECTRONIC COMPONENTS ON CONTINUOUS TAPES (SURFACE MOUNTING DEVICES)) FOR SHAPE AND DIMENSIONS OF PLASTIC (EMBOSSED) TAPE AND REEL.
3. E DIMENSION IS PORTION OF THE CORE.

ltr	ecn no	dr	date
A	J05-0322	H.T	6/3/'05
B	J06-0413	H.T	10/4/'06

mat'l. code

surface 58 ISO 1302

tolerance ISO 406 ISO 1101

tolerances unless otherwise specified: angles ±5°; linear ±5

projection

mm

scale X

dr 10/4/'06
engr 10/4/'06
chr 10/12/'06
appd 10/12/'06

product family 58NF

CODE JP

title 1mm SPACING SMT CONNECTOR (Cat.No. HFW__R-2STAE1LF)

dwg no JSA 96458

sheet 1 of 1

size A4

type Product Customer Drawing

sheet index	revision	B
	sheet	1

Rev. B

SC-HFWR 03 JSA96453
form: A4

FCIconnect.com
Copyright FCI.

RECOMMENDED CABLE (FPC)

n : NO. OF CONDUCTORS

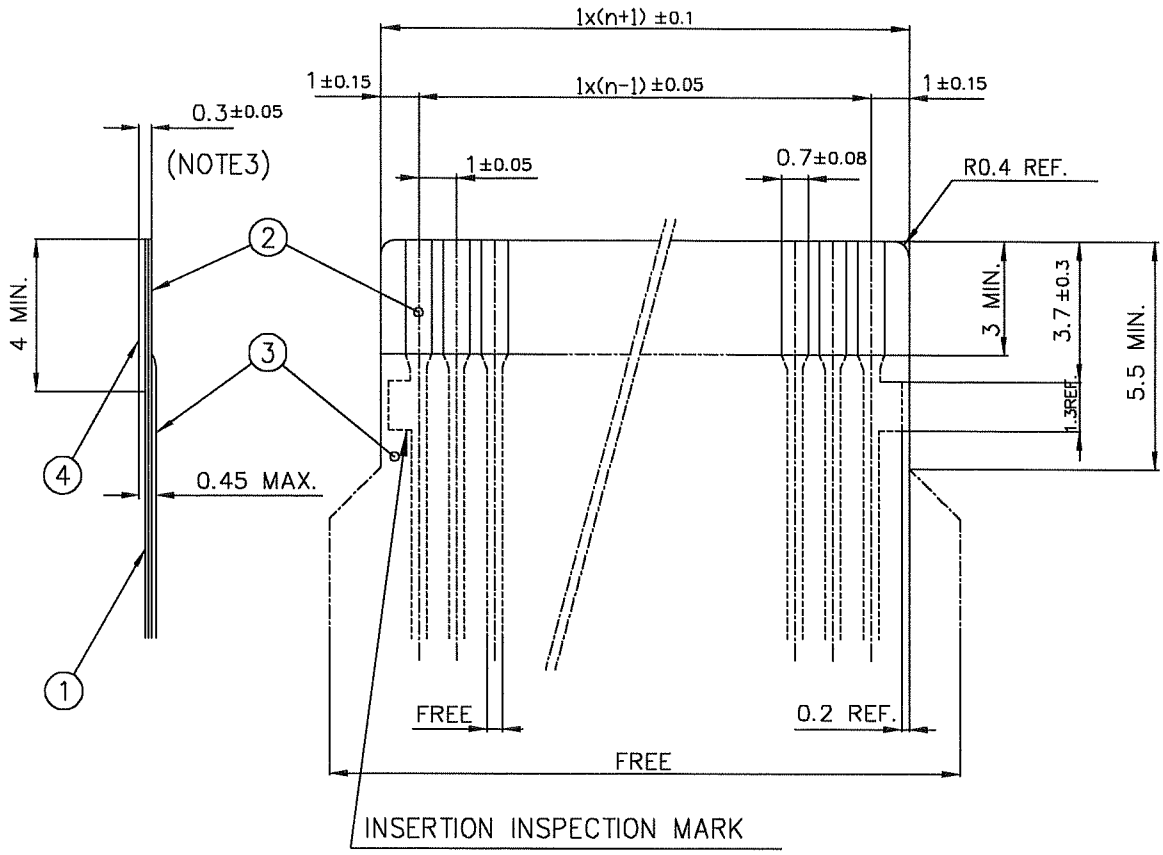

PT. NO.	DESCRIPTION	MATERIAL	THICKNESS (μm)
1	BASE FILM	POLYIMIDE OR POLYESTER OR EQUIVALENT	25
2	CONDUCTOR	COPPER FOIL(PLATING : GOLD)	35
3	OVERLAY	POLYIMIDE OR POLYESTER OR EQUIVALENT	—
4	SUPPORTING TAPE	POLYESTER OR POLYIMIDE OR EQUIVALENT	188

NOTES

1. NO BURR AT EACH PORTION.
2. NO PEELING IN COMMON USE.
3. TOTAL THICKNESS LIMIT OF EACH MATERIAL (INCLUDING ADHESIVE AGENT) IS SPECIFIED.

FCIconnect.com
Copyright FCI.

ltr	ecn no	dr	date
A	J05-0322	H.T	6/2/'05
B	J06-0078	H.T	3/1/'06
C	J06-0413	H.T	10/4/'06

mat'l. code

surface 58 ISO 1302

tolerance ISO 406 ISO 1101

tolerances unless otherwise specified: angles, linear

projection

mm

scale X

dr 10/4/06
engr 10/4/06
chr 10/12/06
appd 10/12/06

product family 58NF

CODE JP

title RECOMMENDED CABLE HFW__R-1/2STA__

dwg no JSA 96459

sheet 1 of 1

size A4

type Product Customer Drawing

sheet index	revision	C
	sheet	1

Rev. C

form: A4