LEADED PRODUCT NUMBER	AS AVAILABLE
54122-XXX-XX-XXXX	

RoHs COMPATIBLE PRODUCT NUMBER
54122-XXXXXXXXXXLF

PLATING

1 = 0.76µm GOLD/GXT ON CONTACT AREA
2µm MIN MATTE TIN ON TAIL
OVER 1.27µm Ni MIN

4 = 2µm MIN MATTE TIN
OVER 1.27µm Ni MIN

5 = 0.25µm GOLD/GXT ON CONTACT AREA
2µm MIN MATTE TIN ON TAIL
OVER 1.27µm Ni MIN

8 = 0.38µm GOLD/GXT ON CONTACT AREA
2µm MIN MATTE TIN ON TAIL
OVER 1.27µm Ni MIN

RoHS COMPATIBLE
SEE NOTE 9

R : RETENTIVE LEG
NOTE 8

STACK HEIGHT, NOTE 6

TOTAL NB OF POSITIONS
04 TO 72

OAL	PIN STYLE
11.17	29
12.2	01
13.5	02
15.9	03
16.56	15
16.76	04
17.65	05
18.91	06
20.50	28
20.96	07
22.40	19
23.5	08
26.04	09
26.42	14
28.00	18
28.58	10
30.48	20
31.12	11
32.15	21
33.66	12
34.00	13
36.20	16
37.30	22
38.40	23
42.30	24
43.00	25
47.00	26
52.00	27

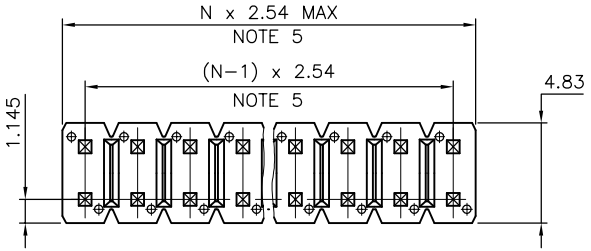

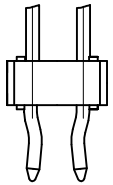

SCHEMA 1
TWO RETENTION PIN AT EACH
END OF THE PRODUCT

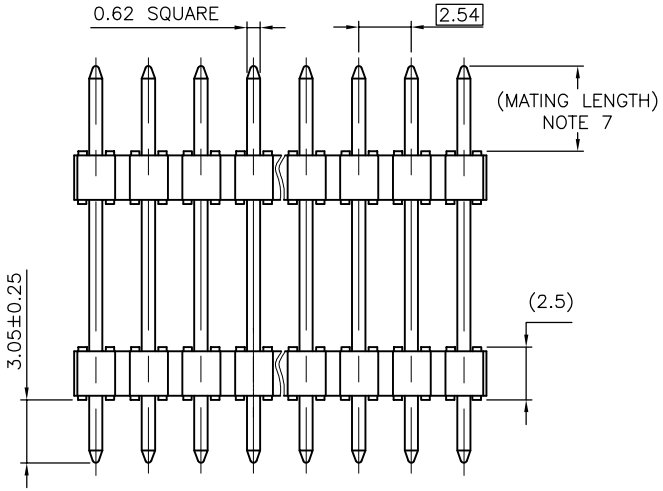

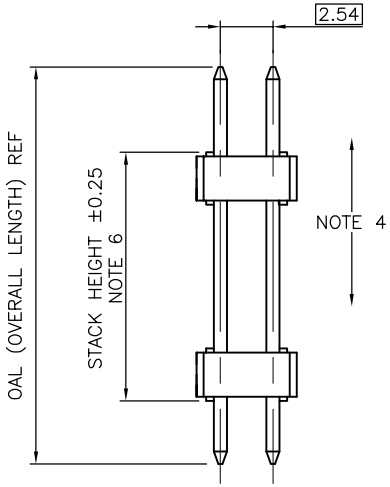

NOTES:

1. HOUSING MAT'L : HIGH TEMPERATURE THERMOPLASTIC. UL94V-0 COLOR: BLACK
2. PIN MATERIAL : PHOSPHOR BRONZE
3. STANDARD PACKAGING IN POLYBAG
4. 9N MIN RETENTION IN EITHER DIRECTION
5. TO DETERMINE DIMENSIONS :
   N = NUMBER OF POSITIONS PER ROW
   EXAMPLE : 8 POS PER ROW, N x 2.54 = 20.32mm
6. XXXX = MILLIMETERS
   SPECIFY MILLIMETERS
   5.0mm MIN TO 60.00mm MAX AVAILABLE
   OAL 65.0MM MAX AVAILABLE.
   EXAMPLE FOR STACK HEIGHT: 1 2 5 0 = 12.5mm
7. MATING LENGTH = (OAL)-(3.05)-(STACK HEIGHT)
8. RETENTION IS APPLIED TO TWO ADJACENT PINS AT EACH END OF THE PRODUCT SEE SCHEMA 1
   OMIT FROM PRODUCT NUMBER IF THIS FEATURE IS NOT APPLICABLE
9. RoHS COMPATIBLE PRODUCT SPECIFICATIONS

   a – PLATING:
   – "LF" MEANS THE PRODUCT IS LEAD-FREE, 2µm MINIMUM MATTE TIN OVER 1.27µm MINIMUM NICKEL UNDERPLATE.

   b – MANUFACTURING PROCESS COMPATIBILITY
   – THE HOUSING WILL WITHSTAND EXPOSURE TO 260°C ±5°C SOLDER BATH TEMPERATURE FOR 5 SECONDS IN A WAVE SOLDER APPLICATION WITH A 1.6mm MIN THICK CIRCUIT BOARD.

   c – LABELLING:
   – MEETS PACKAGING SPECS AS PER GS-14-920

   d – THIS PRODUCT MEETS EUROPEAN UNION DIRECTIVES AND OTHER COUNTRY REGULATIONS AS DESCRIBED IN GS-47-0004.

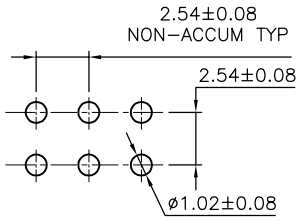

RECOMMENDED HOLE PATTERN

ltr	ecn no	dr	date
H	F08-0148	RTR	08.03.31
J	F10-0252	JCO	10.11.30
K	F11-0034	LMU	11.03.03
L	B-15673	LMU	13.02.14
M	B-18962	LMU	14.09.29
N	B-19782	AMA	14.12.16
P	B-20598	AMA	15.03.30

mat'l. code: SEE NOTES
surface: ISO 1302
tolerance: ISO 406 ISO 1101
tolerances unless otherwise specified: angles; linear x.x ±0.3, x.xx ±0.13, x.xxx ±0.05
projection
mm
scale 4:1

dr	D.LE	01.01.24
engr	JM.C	01.01.24
chr	JM.C	01.01.24
appd	JF.N	01.01.24

product family: BERGSTIK
title: UNSHR.HEADER
STR DR TMT
dwg no: 54122
sheet 1 of 1
size: A3
type: CUSTOMER Drawing

sheet index | revision sheet

form: A3

Copyright FCI
FCIconnect.com