MICRO SWITCH
FREEPORT ILLINOIS U S A
A DIVISION OF HONEYWELL
FED. MFG. CODE 91929

SWITCH-ENCLOSED

CATALOG LISTING
22HR1-S

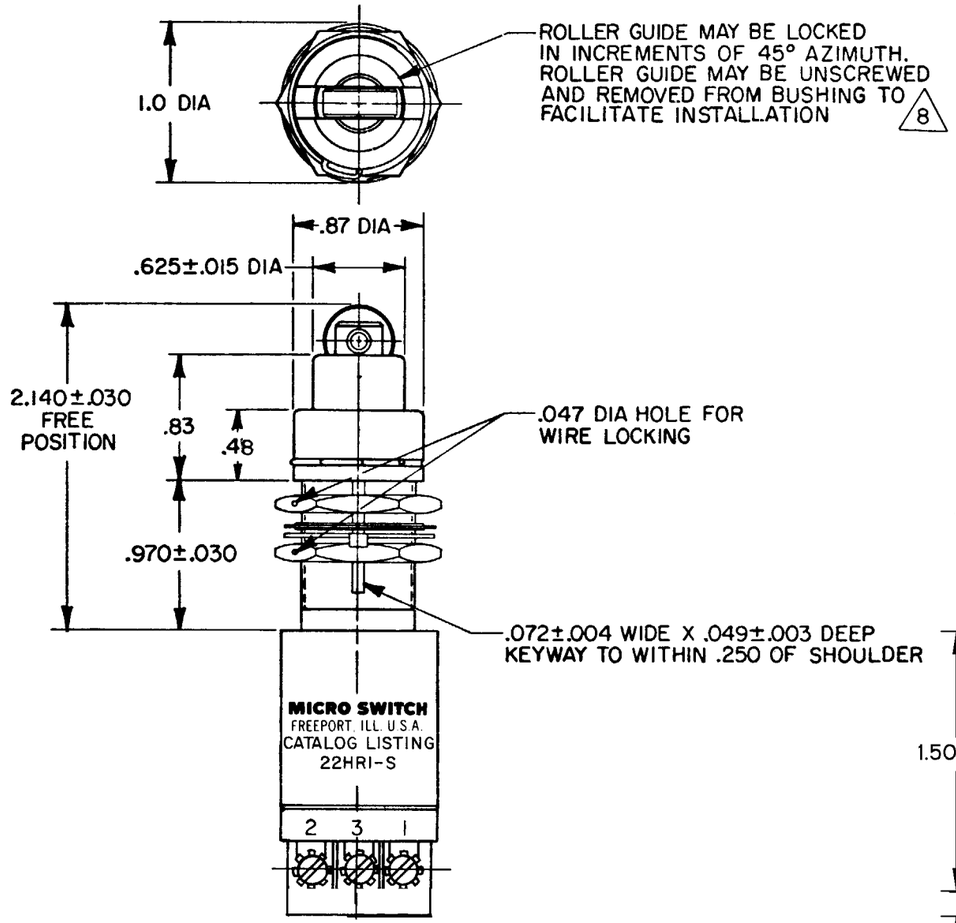

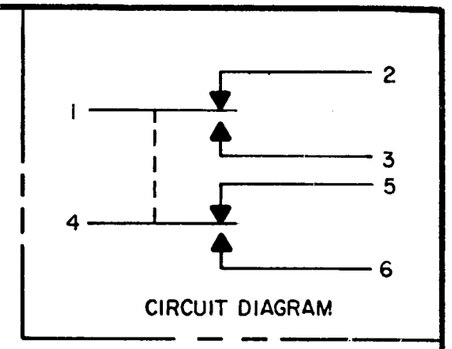

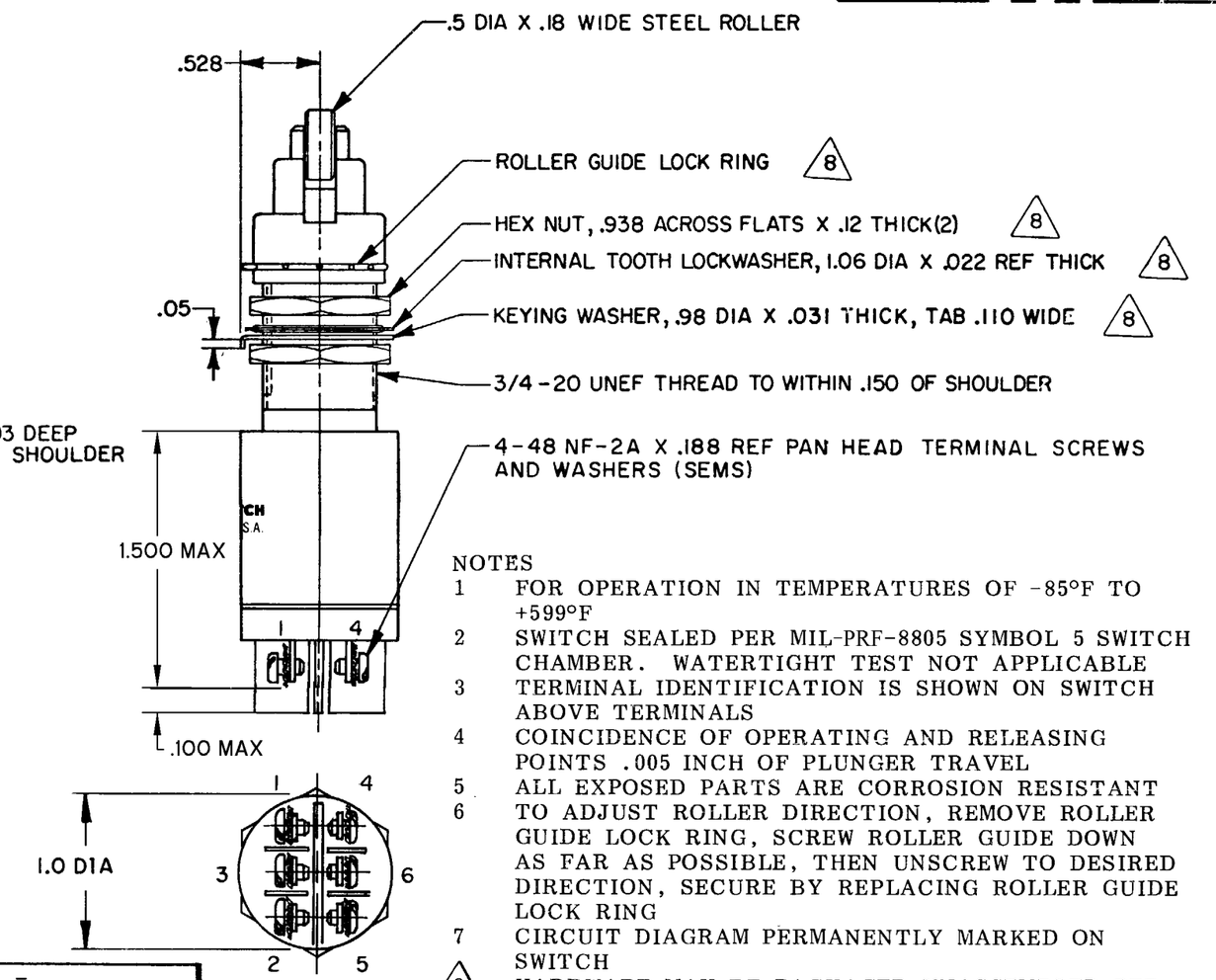

NOTES

1. FOR OPERATION IN TEMPERATURES OF -85°F TO +599°F
2. SWITCH SEALED PER MIL-PRF-8805 SYMBOL 5 SWITCH CHAMBER. WATERTIGHT TEST NOT APPLICABLE
3. TERMINAL IDENTIFICATION IS SHOWN ON SWITCH ABOVE TERMINALS
4. COINCIDENCE OF OPERATING AND RELEASING POINTS .005 INCH OF PLUNGER TRAVEL
5. ALL EXPOSED PARTS ARE CORROSION RESISTANT
6. TO ADJUST ROLLER DIRECTION, REMOVE ROLLER GUIDE LOCK RING, SCREW ROLLER GUIDE DOWN AS FAR AS POSSIBLE, THEN UNSCREW TO DESIRED DIRECTION, SECURE BY REPLACING ROLLER GUIDE LOCK RING
7. CIRCUIT DIAGRAM PERMANENTLY MARKED ON SWITCH
8. HARDWARE MAY BE PACKAGED UNASSEMBLED PER MIL-PRF-8805

THIS DRAWING COVERS A PROPRIETARY ITEM AND IS THE PROPERTY OF MICRO SWITCH, A DIVISION OF HONEYWELL. THIS DRAWING IS NOT TO BE COPIED OR USED WITHOUT THE APPROVAL OF MICRO SWITCH.

THIRD ANGLE PROJECTION

SCALE —

DO NOT SCALE PRINT

TOLERANCES
APPLY TO DESIGN UNITS. CONVERSIONS ARE ONLY FOR REFERENCE. UNLESS NOTED, TOLERANCES ARE ±

	DIM. mm	TOL. mm/in	DIM. in	TOL. mm/in
NO PLACES	X	1/04		
ONE PLACE	X.X	0.4/.016	X.X	0.8/.03
TWO PLACES	X.XX	0.13/.006	X.XX	0.38/.015
THREE PLACES			X.XXX	0.13/.005
ANGLES				

DESIGN UNITS SI METRIC ☐ US CUSTOMARY ■

RAW MATERIAL-COMMERCIAL STANDARD
MICRO SWITCH STANDARDS APPLY
DIMENSIONS ARE TO BE MET BEFORE PROTECTIVE COATINGS ARE APPLIED

WEIGHT 5 OZ. MAX.

CHARACTERISTICS	
OPERATING FORCE	6-12 LBS
FULL OVERTRAVEL FORCE	35 LBS MAX
RELEASE FORCE	5 LBS MIN
PRETRAVEL	.050 MAX
DIFFERENTIAL TRAVEL	-.015 MAX
OVERTRAVEL	.250 MIN

ELECTRICAL DATA

CONTACT ARRANGEMENT
SPDT(2)

28 VOLTS DC (EACH CIRCUIT)
RESISTIVE — 5 AMPS
INDUCTIVE — 2 AMPS

REVISIONS			
A	47573	TSM 20 JULY 80	
B	C047277	JAP 9 JAN 81	
C	C093991	MPO 14 DEC 98	
D	0038194	PK 09APR08	

DRAWN	TSM	20 JULY 80	
CHECK	JAF	14 DEC 98	
ASD		09APR08	
CHECK			
CHECK			
CHECK			
REPLACES			
RELEASE NO. SR-7306			
DRAWING NUMBER	M	22HR1-S PAGE 1 OF 1	
ISSUE	12	14	

RASTER FO-5285 1-A