THIS DRAWING IS UNPUBLISHED. RELEASED FOR PUBLICATION -,- .
© COPYRIGHT - By - ALL RIGHTS RESERVED.

LOC	DIST
GP	00

REVISIONS

P	LTR	DESCRIPTION	DATE	DWN	APVD
	C	REVISED PER ECO-12-015754	04SEP2012	CJV	SLB

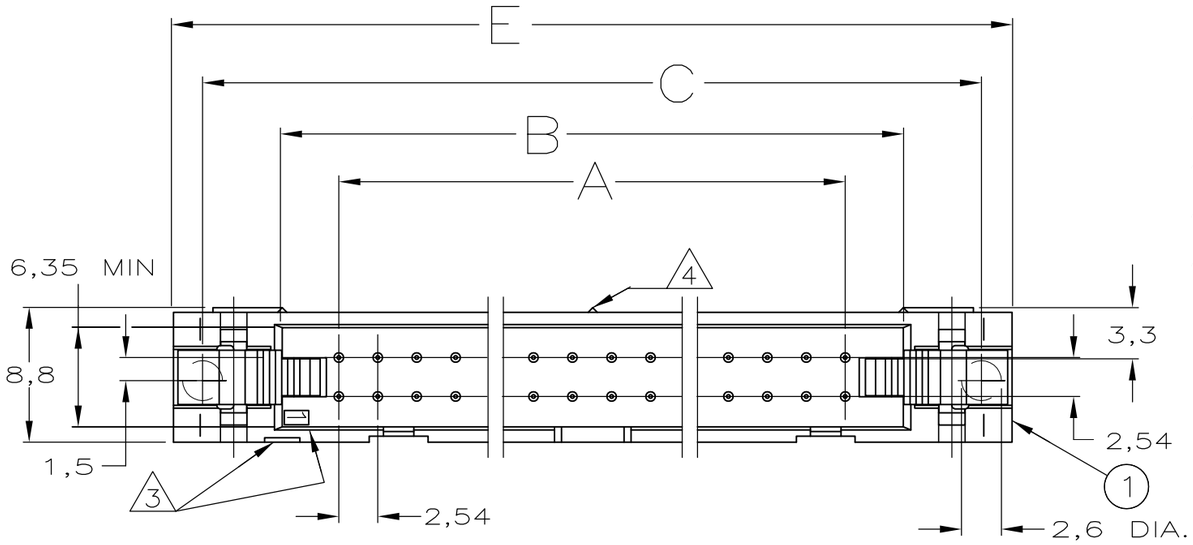

NOTES

1. SNAP-IN POLARIZERS PN 927636-2 OR 927637-2 CAN BE APPLIED.
2. THERE IS NO WINDOW FOR SNAP-IN POLARIZERS AT THIS END IN 10 AND 14 POS HEADERS.
3. INDICATION OF FIRST POSITION.
4. THERE IS NO CENTER STAND-OFF IN 10-26 POS HEADERS.

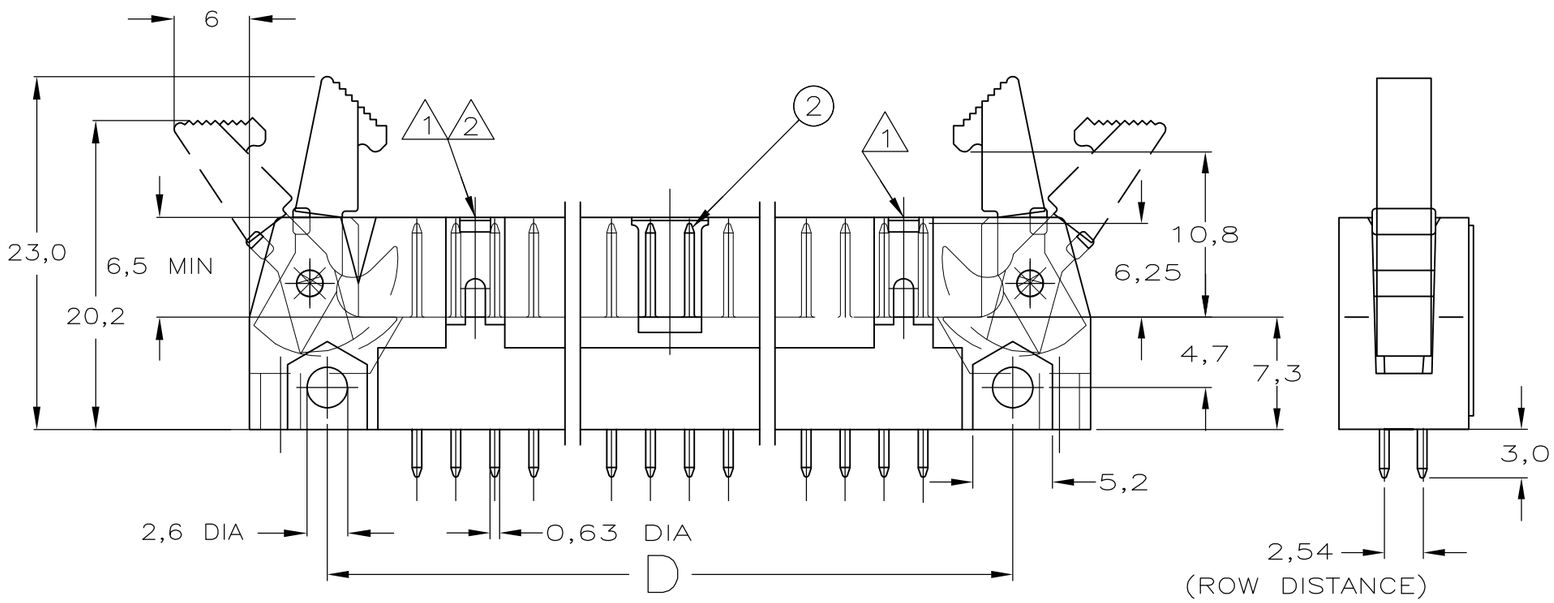

RECOMMENDED PCB-HOLE PATTERN

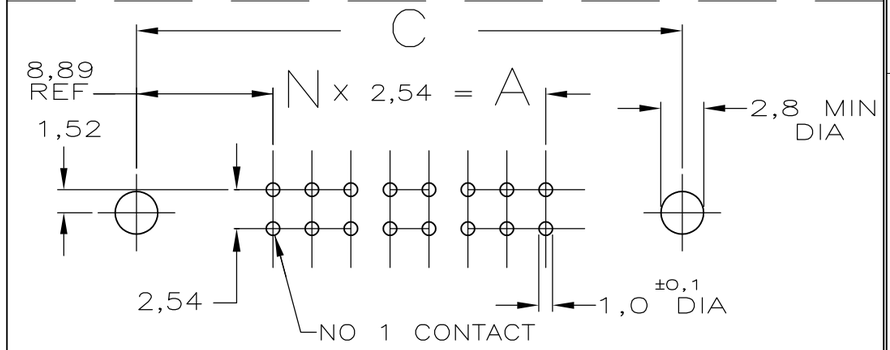

2 PIN-CONTACT	BRASS	MATING SIDE: 0,8µm AU OR 0,8µm AMP DURAGOLD® / OVER 1,27µm NI SOLDER SIDE: MIN. 3,0µm SN OVER 1,27µm NI
1 HOUSING	GLASS FILLED POLYESTER	BLACK

100,6	90,4	96,5	86,4	78,7	64	6-828588-4
95,5	85,3	91,4	81,3	73,7	60	6-828588-0
82,8	72,6	78,7	68,6	61,0	50	5-828588-0
70,1	59,9	66,0	55,9	48,3	40	4-828588-0
62,5	52,3	58,4	48,3	40,6	34	3-828588-4
52,3	42,2	48,3	38,1	30,5	26	2-828588-6
44,7	34,5	40,6	30,5	22,9	20	2-828588-0
39,6	29,5	35,6	25,4	17,8	16	1-828588-6
37,1	26,9	33,0	22,9	15,2	14	1-828588-4
32,0	21,8	27,9	17,8	10,2	10	1-828588-0
E	D	C	B	A	NO OF POSITIONS	PART NUMBER

THIS DRAWING IS A CONTROLLED DOCUMENT.
DIMENSIONING AND TOLERANCING PER ASME Y14.5M-2009

DIMENSIONS: mm

TOLERANCES UNLESS OTHERWISE SPECIFIED:
0 PLC ± -
1 PLC ± -
2 PLC ± -
3 PLC ± -
4 PLC ± -
ANGLES ± -

MATERIAL -
FINISH -

DWN J.v.LIEMPT 29-11-93
CHK R.VERSTIJNEN. -
APVD L.V.SOEST. -
PRODUCT SPEC -
APPLICATION SPEC -
WEIGHT -

TE Connectivity

NAME AMP-LATCH HEADER 180 DEG VERSION WITH LATCHES

SIZE A3 | CAGE CODE 00779 | DRAWING NO C-828588 | RESTRICTED TO -

CUSTOMER DRAWING | SCALE - | SHEET 1 OF 1 | REV C

OBSOLETE
NOT the LATEST REVISION