THIS DRAWING IS UNPUBLISHED. RELEASED FOR PUBLICATION -,- .
© COPYRIGHT - BY TYCO ELECTRONICS CORPORATION. ALL RIGHTS RESERVED.

LOC	DIST
AD	25

REVISIONS

P	LTR	DESCRIPTION	DATE	DWN	APVD
	01	REVISED PER ECO-07-012819	27JUN07	DH	DB

1. HOUSING MATERIAL: GLASS-FILLED POLYMER.
2. POST MATERIAL: COPPER ALLOY.
3. POST FINISH: DIN 41612 CLASS 2 IN CONTACT AREA. TIN PLATE ON POSTS.
4. MARKING ON THIS SIDE.
5. RECOMMENDED HOLE SIZE FOR MANUAL APPLICATION OF CONNECTOR ONTO PC BOARD.
6. PART NUMBER, DATE CODE MARKED THIS APPROXIMATE AREA.

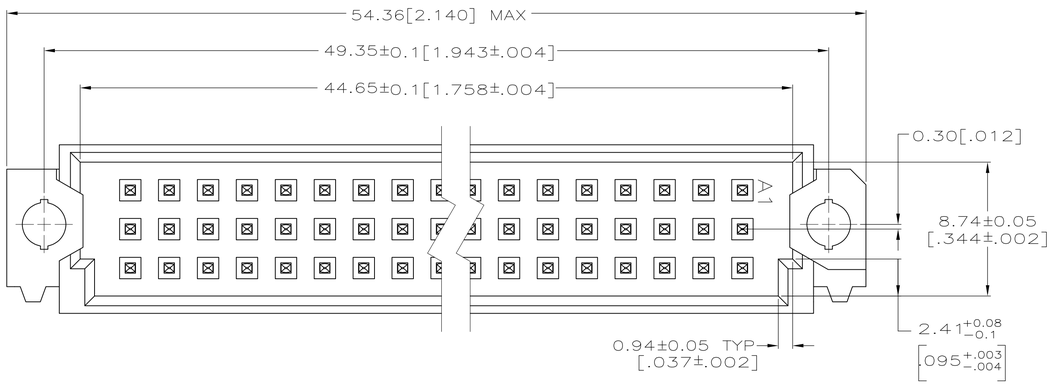

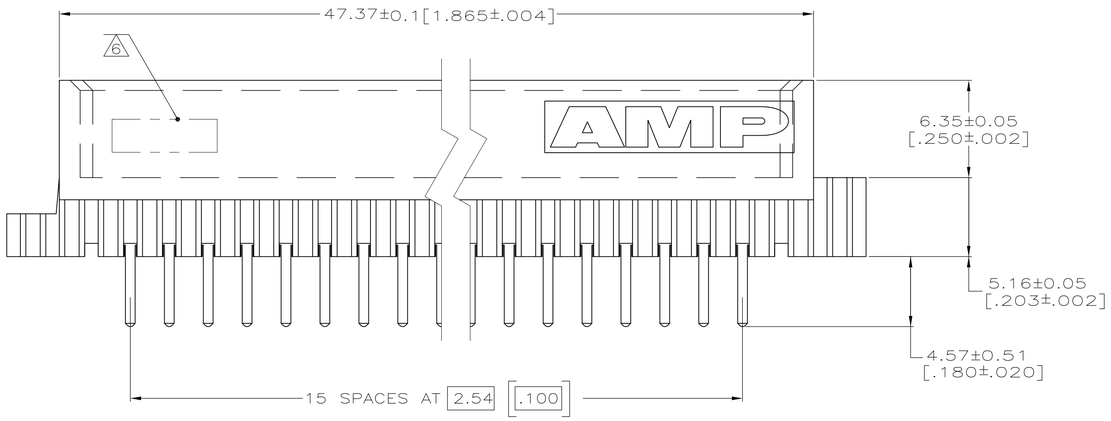

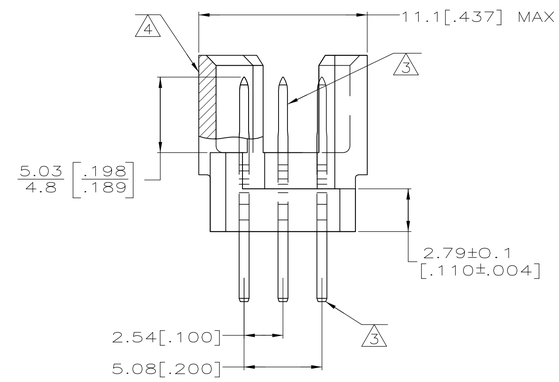

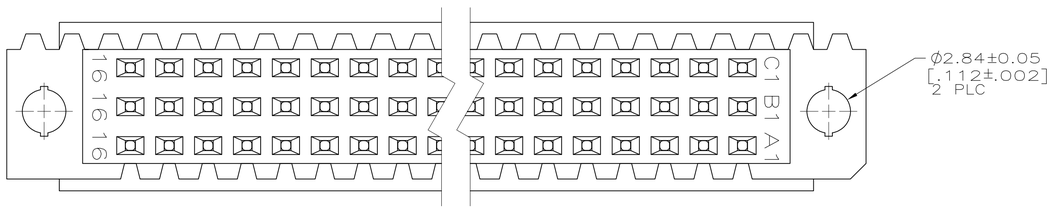

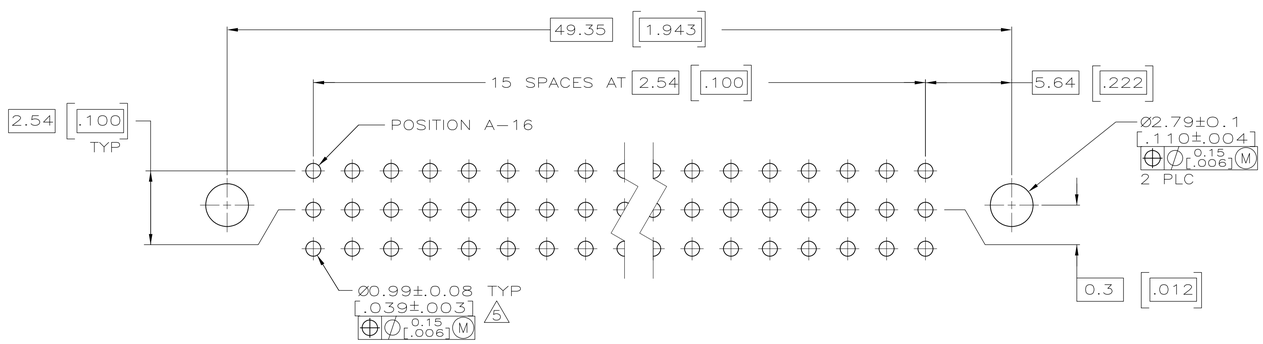

PC BOARD LAYOUT

1-16	X	X	X	48	5650477-5
POSITIONS LOADED	C	B	A	NO. OF LOADED POSITION	ASSY PART NUMBER
	ROWS LOADED				

THIS DRAWING IS A CONTROLLED DOCUMENT.

DIMENSIONS: mm [INCHES]

TOLERANCES UNLESS OTHERWISE SPECIFIED:
0 PLC ± –
1 PLC ± –
2 PLC ± 0.13[.005]
3 PLC ± –
4 PLC ± –
ANGLES ± –

MATERIAL 1 2
FINISH 3

DWN J. POLIGNONE 05MAY05
CHK A. SHARPE 05MAY05
APVD A. SHARPE 05MAY05
PRODUCT SPEC —
APPLICATION SPEC —
WEIGHT —

Tyco Electronics
Tyco Electronics Corporation
Harrisburg, Pa 17105-3608

NAME
ASSEMBLY, PIN EUROCARD, TYPE 1/2R
48 POSITION,
4.57[.180] SOLDER POST

SIZE	CAGE CODE	DRAWING NO	RESTRICTED TO
A1	00779	C-5650477	—

CUSTOMER DRAWING SCALE 5:1 SHEET 1 OF 1 REV 01