THIS DRAWING IS UNPUBLISHED. RELEASED FOR PUBLICATION 20
© COPYRIGHT 20 Tyco Electronics AMP GmbH ALL RIGHTS RESERVED.

LOC	DIST
FT	0

REVISIONS

P	LTR	DESCRIPTION	DATE	DWN	APVD
	C1	REVISED PER ECO-12-007964	02MAY2012	KH	MS

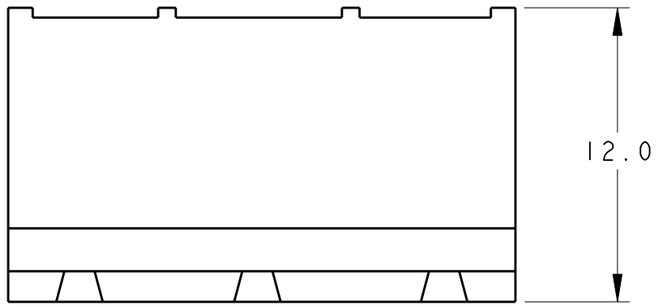

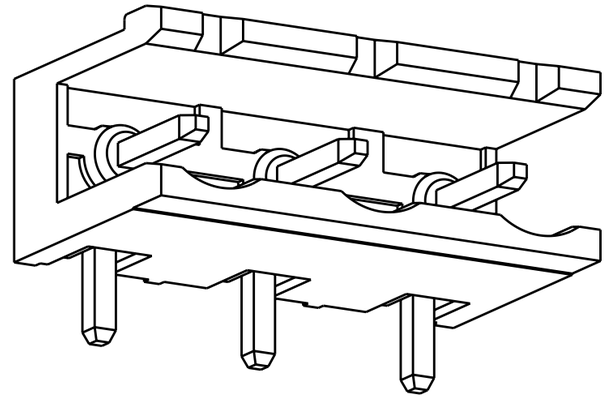

282961-3 AS SHOWN

1. MATERIALS AND FINISH
   HOUSING: PA 6-6, UL 94-V0, COLOR GREEN.
   TERMINAL: COPPER ALLOY, TIN PLATED.
2. SUITABLE FOR 1,6-2,4mm PC BOARD THICKNESS.
3. RECOGNIZED UNDER THE COMPONENT PROGRAM OF UNDERWRITERS LABORATORIES INC. FILE N° E60677.
4. IMQ CERTIFICATE WITH SURVEILLANCE IN CONFORMITY WITH IEC 998-1/998-2-1.
5. NOT CUMULATIVE TOLERANCE.

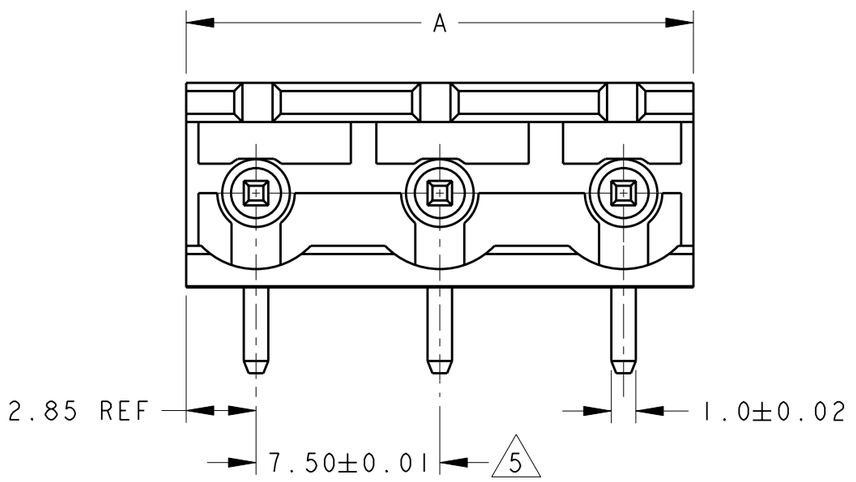

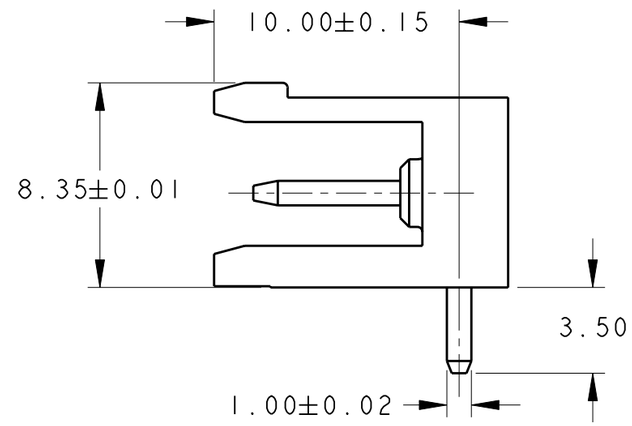

DIM. A	N° OF POS.	PART NUMBER
88.20	12	1-282961-2
80.70	11	1-282961-1
73.20	10	1-282961-0
65.70	9	282961-9
58.20	8	282961-8
50.70	7	282961-7
43.20	6	282961-6
35.70	5	282961-5
28.20	4	282961-4
20.70	3	282961-3
13.20	2	282961-2

RECOMMENDED PC BOARD LAYOUT

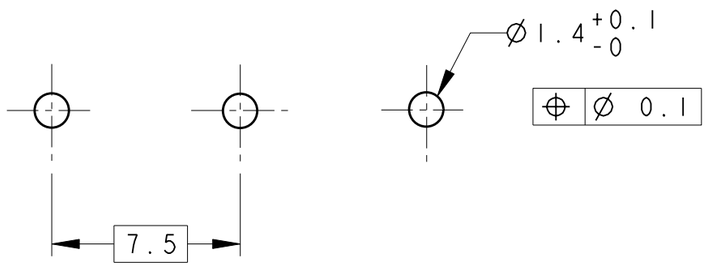

THIS DRAWING IS A CONTROLLED DOCUMENT.

DIMENSIONS: mm

TOLERANCES UNLESS OTHERWISE SPECIFIED:

0 PLC	±-
1 PLC	±.3
2 PLC	±.25
3 PLC	±-
4 PLC	±-
ANGLES	±2

MATERIAL 1 -

FINISH 1 -

DWN	E. ZANOLINI	15NOV2001
CHK	D. BIEVENOUR	15NOV2001
APVD	D. BIEVENOUR	15NOV2001

PRODUCT SPEC 108-20166

APPLICATION SPEC 114-20079

WEIGHT -

CUSTOMER DRAWING

TE Connectivity

NAME TERMINAL BLOCK HEADER ASSEMBLY, 90 DEGREE OPEN ENDS, 7.5mm PITCH

SIZE	CAGE CODE	DRAWING NO	RESTRICTED TO
A3	00779	C-282961	-

SCALE 4:1 SHEET 1 OF 1 REV C1

1470-19 (3/11)

Pro/ENGINEER DRAWING