THIS DRAWING IS UNPUBLISHED. RELEASED FOR PUBLICATION .2000.
© COPYRIGHT 2000 BY TYCO ELECTRONICS CORPORATION. ALL RIGHTS RESERVED.

LOC	DIST
A1	-

REVISIONS

P	LTR	DESCRIPTION	DATE	DWN	APVD
	A3	ECR-10-017493	31.01.11	SR	AR

PN 1-1 & 2-1

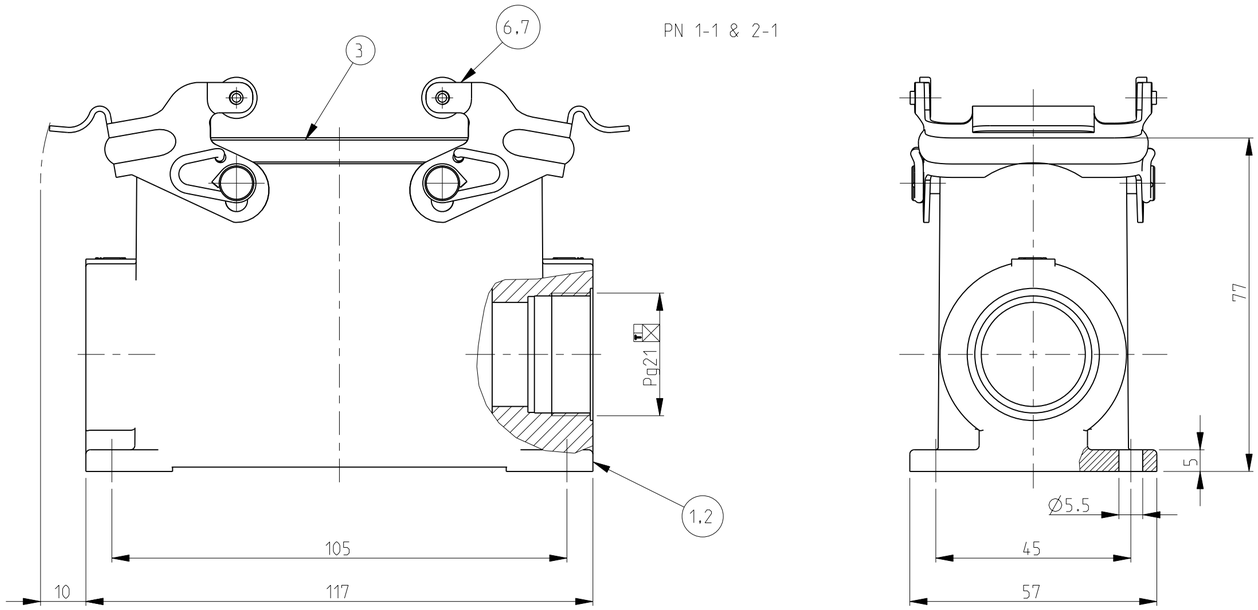

PN 1-2 & ~~2-2~~

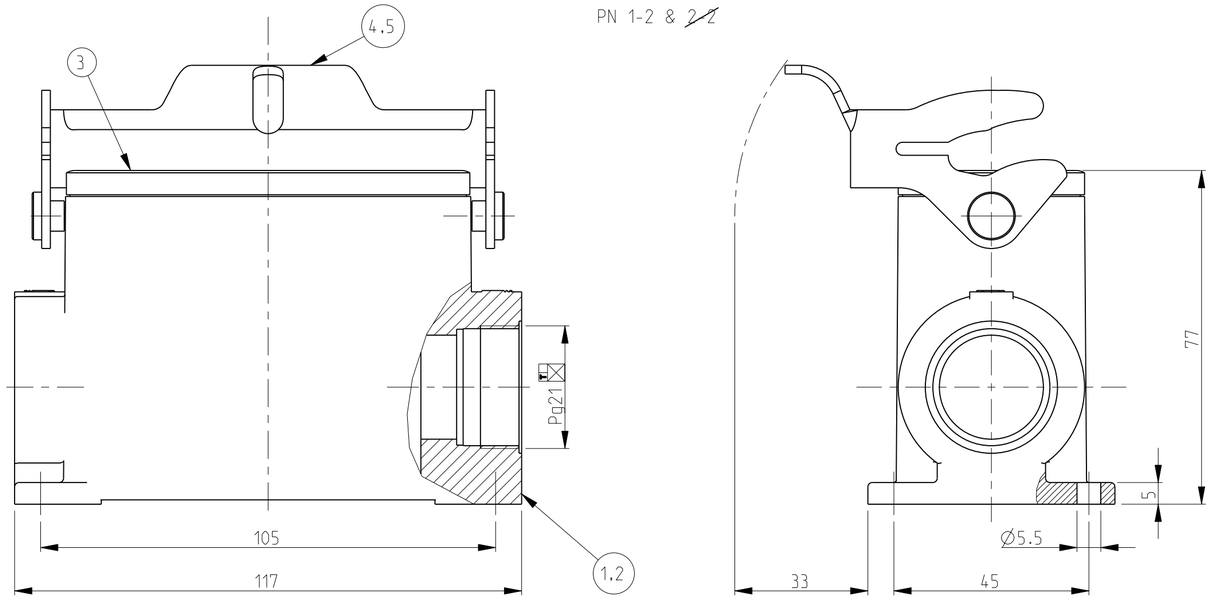

NOTES.

1 Material:Housing:Aluminium Diecasting Alloy
Seals:Neoprene

2 Surface:Varnish grey
-Aluminium Oxide +Varnish Black

3 Varnish on the inside not necessary

4 Packaging
Quantity 5 Pieces in a box

PN 1-1 & 2-1

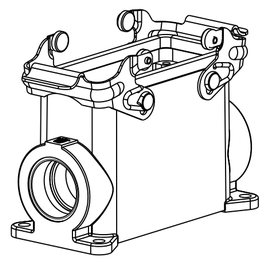

SCALE 1:2

PN 1-2 & ~~2-2~~

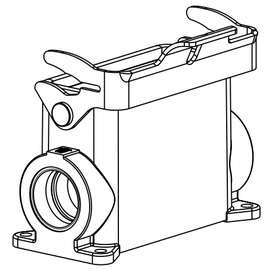

SCALE 1:2

OBSOLETE									
		2		VS-Clip positioner	Stainless steel	Blank		7	
			2	VS-Clip positioner	Steel	Zinc plated	Blue	6	
1				LB-Side clip	Stainless steel	Blank		5	
	1			LB-Side clip	Steel	Zinc plated	Blue	4	
1	1	1	1	Profile seal	Neoprene		Black	3	
1		1		Surface mounted housing side entry HD-K	Aluminium	Aluminium oxide	Black	2	
	1		1	Surface mounted housing side entry HD	Aluminium		Grey	1	
2-2	1-2	2-1	1-1	DESCRIPTION	MATERIAL	SURFACE	COLOR	ITEM NO	REMARKS

ORDERING TEXT
HD.40.SG-VS.1.21.Z
HD-K.40.SG-VS.1.21.Z
HD.40.SG-LB.1.21.Z
~~HD-K.40.SG-LB.1.21.Z~~

THIS DRAWING IS A CONTROLLED DOCUMENT FOR TYCO ELECTRONICS CORPORATION. IT IS SUBJECT TO CHANGE AND THE CONTROLLING ENGINEERING ORGANIZATION SHOULD BE CONTACTED FOR THE LATEST REVISION.

DIMENSIONS: mm

TOLERANCES UNLESS OTHERWISE SPECIFIED:
n.ISO 8015
n.ISO 2768-mH-E
n.DIN 16901-120
0 PLC ±
1 PLC ±
2 PLC ±
3 PLC ±
4 PLC ±
ANGLES ±

MATERIAL
FINISH

DWN Schneider 21.08.03
CHK Schweiger 21.08.03
APVD -
PRODUCT SPEC -
APPLICATION SPEC -
WEIGHT -

Tyco Electronics
Tyco Electronics.AMP.GmbH
D-53819.Neunkirchen.Germany

NAME
Surface mounted housing side entry
HD.40.SG-VS/LB.1.21.Z

SIZE	CAGE CODE	DRAWING NO	RESTRICTED TO
A2	00779	C-1102575	-

CUSTOMER DRAWING
SCALE 1:1 SHEET 1 OF 1 REV A3

AMP 1471-9 REV 31MAR2000

Pro/ENGINEER DRAWING