THIS DRAWING IS UNPUBLISHED. RELEASED FOR PUBLICATION 2004
© COPYRIGHT 2004 BY - ALL RIGHTS RESERVED.

CODINGS: 2:1

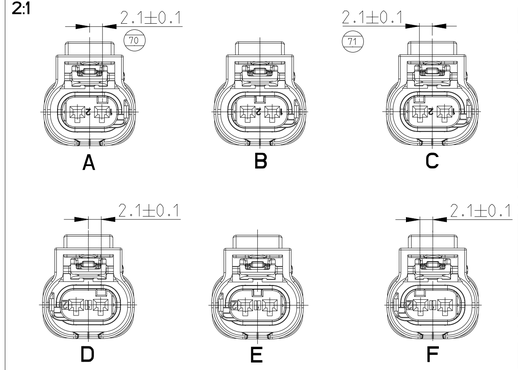

CPA IN END-LOCK POSITION: 2:1

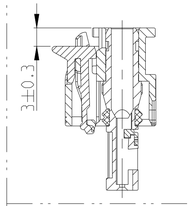

RETAINER IN PRE-LOCK POITION.: 2:1

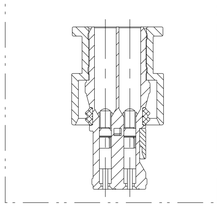

VERSION WITH TURNED INNER HSG: X-2236896-3 12 2:1

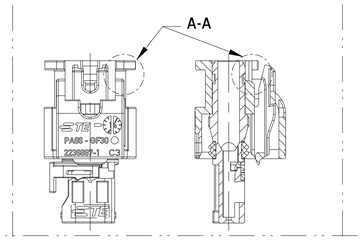

VERSION WITHOUT CPA: 14 2:1

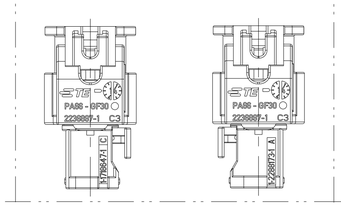

AREA FOR PRINT: 13 6:1

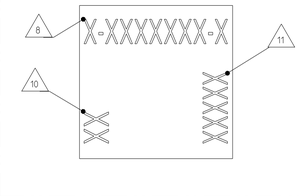

REVISIONS					
P	LTR	DESCRIPTION	DATE	DWN	APVD
	C7	ADDITIONAL VERSION	08JUN2017	RT	SZG
	C8	BOM COLOR CORRECTION	09NOV2017	GK	RT
	C9	ADDITIONAL INFO ON WIRE CROSSECTION	29AUG2019	SZN	LSZ
	D	SEAL MATERIAL CHANGE	26JUL2022	SZN	LSZ

1 USABLE CONTACTS MCON 1.2
SEE TE Connectivity -NO. 1452674, VERSION SINGLE WIRE SEAL

2 MAX. WIRE SIZE RANGE 1.5 mm² FLR PERMITTED FOR CAVITY-Ø 3.55MM
QUANTITY SEE WIRE HARNESS DRAWING
C9 FOR PERMISSIBLE CURRENT CARRYING CAPACITY OF THE SINGLE CONTACT
SEE PRODUCT SPECIFICATION NO.108-18782

3 SUPPLIER-MARK

4 SPACE OF ACTIVITY

5 SUPPLY CONDITION: CPA IN PRELOCKED POSITION

6 SUPPLY CONDITION: RETAINER IN PRELOCKED POSITION

7 WARPAGE PERMITTED TO MAX. -0.5mm

8 TE Connectivity ORDER-NO.

9 ACCORDING TO INTERFACE DRAWING SEE TE-NO. 114-18679-3

10 ASSEMBLY LINE SEGMENT IDENTIFICATION

11 DATE CODE (DDDYY)

12 VERSION WITH 180° TURNED INNER HSG.

13 AREA FOR PRINT

14 VERSION WITHOUT CPA

CODING A AS SHOWN

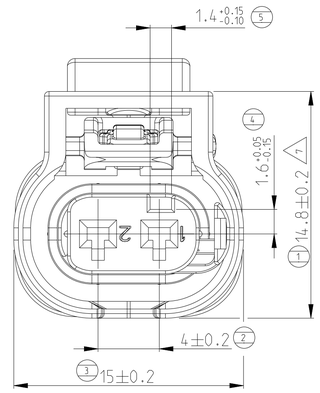

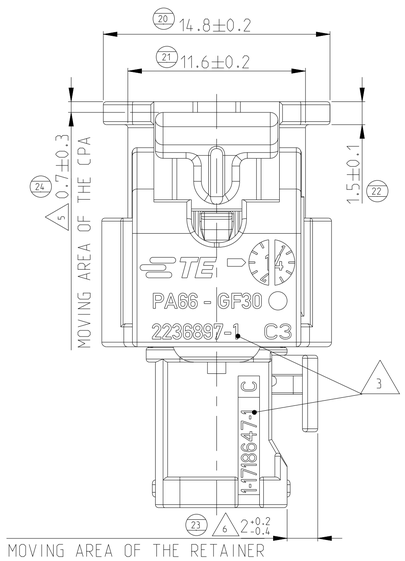

A-A

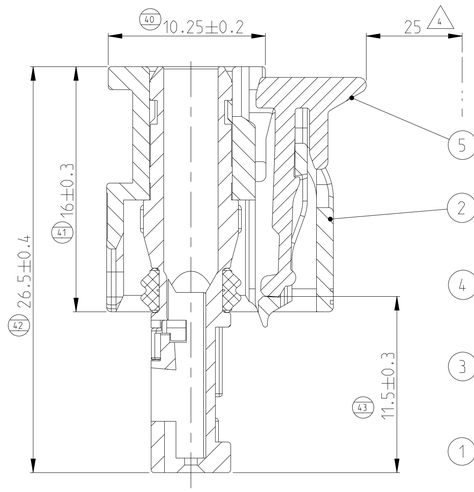

B-B

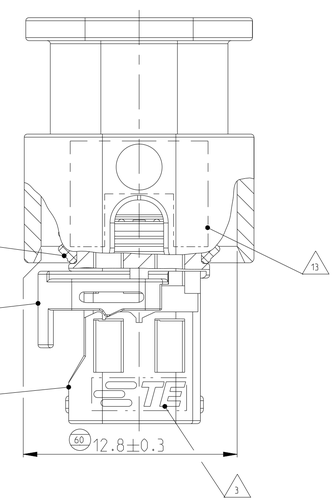

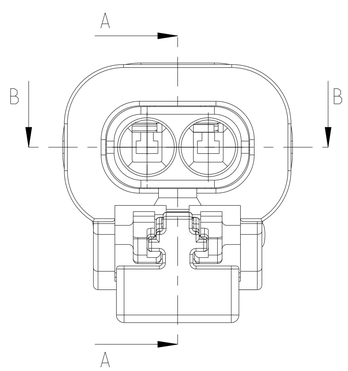

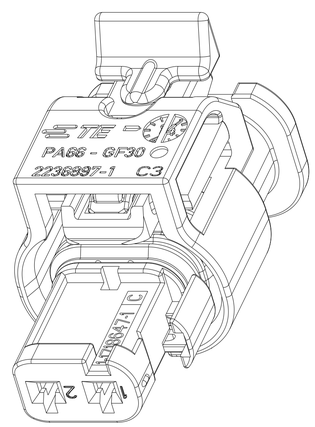

TE-ORDER-NO. 10	COD	DESCRIPTION	REV	QTY	DESCRIPTION	MATERIAL	SURFACE/COLOR	ITEM
4-2236896-3 12 14	D	2pos. MCON 1.2 - LL Connector Sealed	D	1	2pos. MCON 1.2 - Seal	SILICONE RUBBER	GREEN	4
				1	2pos. MCON 1.2 - Retainer	PA66-GF15	VIOLETT - SIMILAR TO RAL 4006	3
				1	2pos. MCON 1.2 - Protec. Cover	PA66-GF30	BLACK - SIMILAR TO RAL 9011	2
				1	2pos. MCON 1.2 - Rec. Housing	PA66-GF30	VIOLETT - SIMILAR TO RAL 4004	1
5-2236896-5	E	2pos. MCON 1.2 - LL Connector Sealed	D	1	CPA. MCON 1.2	PBT GF33	RED	5
				1	2pos. MCON 1.2 - Seal	SILICONE RUBBER	GREEN	4
				1	2pos. MCON 1.2 - Retainer	PA66-GF15	VIOLETT - SIMILAR TO RAL 4006	3
				1	2pos. MCON 1.2 - Protec. Cover	PA66-GF30	BLACK - SIMILAR TO RAL 9011	2
				1	2pos. MCON 1.2 - Rec. Housing	PA66-GF30	GREEN	1
4-2236896-5	D	2pos. MCON 1.2 - LL Connector Sealed	D	1	CPA. MCON 1.2	PBT GF33	RED	5
				1	2pos. MCON 1.2 - Seal	SILICONE RUBBER	GREEN	4
				1	2pos. MCON 1.2 - Retainer	PA66-GF15	VIOLETT - SIMILAR TO RAL 4006	3
				1	2pos. MCON 1.2 - Protec. Cover	PA66-GF30	BLACK - SIMILAR TO RAL 9011	2
				1	2pos. MCON 1.2 - Rec. Housing	PBT GF33	VIOLETT - SIMILAR TO RAL 4004	1
4-2236896-1 14	D	2pos. MCON 1.2 - LL Connector Sealed	D	1	2pos. MCON 1.2 - Seal	SILICONE RUBBER	GREEN	4
				1	2pos. MCON 1.2 - Retainer	PA66-GF15	VIOLETT - SIMILAR TO RAL 4006	3
				1	2pos. MCON 1.2 - Protec. Cover	PA66-GF30	BLACK - SIMILAR TO RAL 9011	2
				1	2pos. MCON 1.2 - Rec. Housing	PA66-GF30	VIOLETT - SIMILAR TO RAL 4004	1
3-2236896-5	C	2pos. MCON 1.2 - LL Connector Sealed	D	1	CPA. MCON 1.2	PBT GF33	RED	5
				1	2pos. MCON 1.2 - Seal	SILICONE RUBBER	GREEN	4
				1	2pos. MCON 1.2 - Retainer	PA66-GF15	VIOLETT - SIMILAR TO RAL 4006	3
				1	2pos. MCON 1.2 - Protec. Cover	PA66-GF30	BLACK - SIMILAR TO RAL 9011	2
				1	2pos. MCON 1.2 - Rec. Housing	PA66-GF30	BLUE - SIMILAR TO RAL5012	1
2-2236896-5	B	2pos. MCON 1.2 - LL Connector Sealed	D	1	CPA. MCON 1.2	PBT GF33	RED	5
				1	2pos. MCON 1.2 - Seal	SILICONE RUBBER	GREEN	4
				1	2pos. MCON 1.2 - Retainer	PA66-GF15	VIOLETT - SIMILAR TO RAL 4006	3
				1	2pos. MCON 1.2 - Protec. Cover	PA66-GF30	BLACK - SIMILAR TO RAL 9011	2
				1	2pos. MCON 1.2 - Rec. Housing	PA66-GF30	NATURE -	1
1-2236896-5	A	2pos. MCON 1.2 - LL Connector Sealed	D	1	CPA. MCON 1.2	PBT GF33	RED	5
				1	2pos. MCON 1.2 - Seal	SILICONE RUBBER	GREEN	4
				1	2pos. MCON 1.2 - Retainer	PA66-GF15	VIOLETT - SIMILAR TO RAL 4006	3
				1	2pos. MCON 1.2 - Protec. Cover	PA66-GF30	BLACK - SIMILAR TO RAL 9011	2
				1	2pos. MCON 1.2 - Rec. Housing	PA66-GF30	BLACK - SIMILAR TO RAL 9011	1
1-2236896-3 12 14	A	2pos. MCON 1.2 - LL Connector Sealed	D	1	2pos. MCON 1.2 - Seal	SILICONE RUBBER	GREEN	4
				1	2pos. MCON 1.2 - Retainer	PA66-GF15	VIOLETT - SIMILAR TO RAL 4006	3
				1	2pos. MCON 1.2 - Protec. Cover	PA66-GF30	BLACK - SIMILAR TO RAL 9011	2
				1	2pos. MCON 1.2 - Rec. Housing	PA66-GF30	BLACK - SIMILAR TO RAL 9011	1
3-2236896-1 14	C	2pos. MCON 1.2 - LL Connector Sealed	D	1	2pos. MCON 1.2 - Seal	SILICONE RUBBER	GREEN	4
				1	2pos. MCON 1.2 - Retainer	PA66-GF15	VIOLETT - SIMILAR TO RAL 4006	3
				1	2pos. MCON 1.2 - Protec. Cover	PA66-GF30	BLACK - SIMILAR TO RAL 9011	2
				1	2pos. MCON 1.2 - Rec. Housing	PA66-GF30	BLUE - SIMILAR TO RAL5012	1
2-2236896-1 14	B	2pos. MCON 1.2 - LL Connector Sealed	D	1	2pos. MCON 1.2 - Seal	SILICONE RUBBER	GREEN	4
				1	2pos. MCON 1.2 - Retainer	PA66-GF15	VIOLETT - SIMILAR TO RAL 4006	3
				1	2pos. MCON 1.2 - Protec. Cover	PA66-GF30	BLACK - SIMILAR TO RAL 9011	2
				1	2pos. MCON 1.2 - Rec. Housing	PA66-GF30	NATURE -	1
1-2236896-1 14	A	2pos. MCON 1.2 - LL Connector Sealed	D	1	2pos. MCON 1.2 - Seal	SILICONE RUBBER	GREEN	4
				1	2pos. MCON 1.2 - Retainer	PA66-GF15	VIOLETT - SIMILAR TO RAL 4006	3
				1	2pos. MCON 1.2 - Protec. Cover	PA66-GF30	BLACK - SIMILAR TO RAL 9011	2
				1	2pos. MCON 1.2 - Rec. Housing	PA66-GF30	BLACK - SIMILAR TO RAL 9011	1

TOLERANCES UNLESS OTHERWISE SPECIFIED ACC. TO DIN 16901-1400 CENTRIC TO NOMINAL DIMENSION. EDITION 1982-11 SHALL APPLY.
Freimasstoleranzen nach DIN 16901-1400. Es gilt die Ausgabe 1982-11.

PRODUCT CHARACTERISTICS ACC. QMP_EMEA_012
BESONDERE MERKMALE NACH QMP_EMEA_012

THIS DRAWING IS A CONTROLLED DOCUMENT.

DIMENSIONS: mm

TOLERANCES UNLESS OTHERWISE SPECIFIED: 0 PLC ±, 1 PLC ±, 2 PLC ±, 3 PLC ±, 4 PLC ±, ANGLES ±2°

MATERIAL - -

FINISH - -

DWN	Sz.Nemes	30JAN2014
CHK	G.Bencur	30JAN2014
APVD	G.Benczur	30JAN2014
PRODUCT SPEC	108-18969-3	
APPLICATION SPEC	114-18861	
WEIGHT	-	

TE Connectivity

NAME: MCON 1.2mm 2pos Sealed Connector (High temp.)

SIZE	CAGE CODE	DRAWING NO	RESTRICTED TO
A1	00779	C-2236896	-

CUSTOMER DRAWING | SCALE 4:1 | SHEET 1 OF 1 | REV D

4805 (3/13)