ROHS COMPLIANT

PRODUCT DATA DRAWING

REVISION HISTORY			
REV	DESCRIPTION	DATE	APPROVED
B	DCN 41727	10/15	DAL

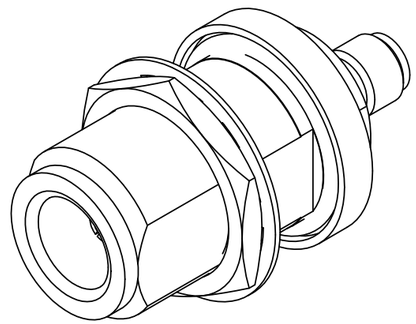

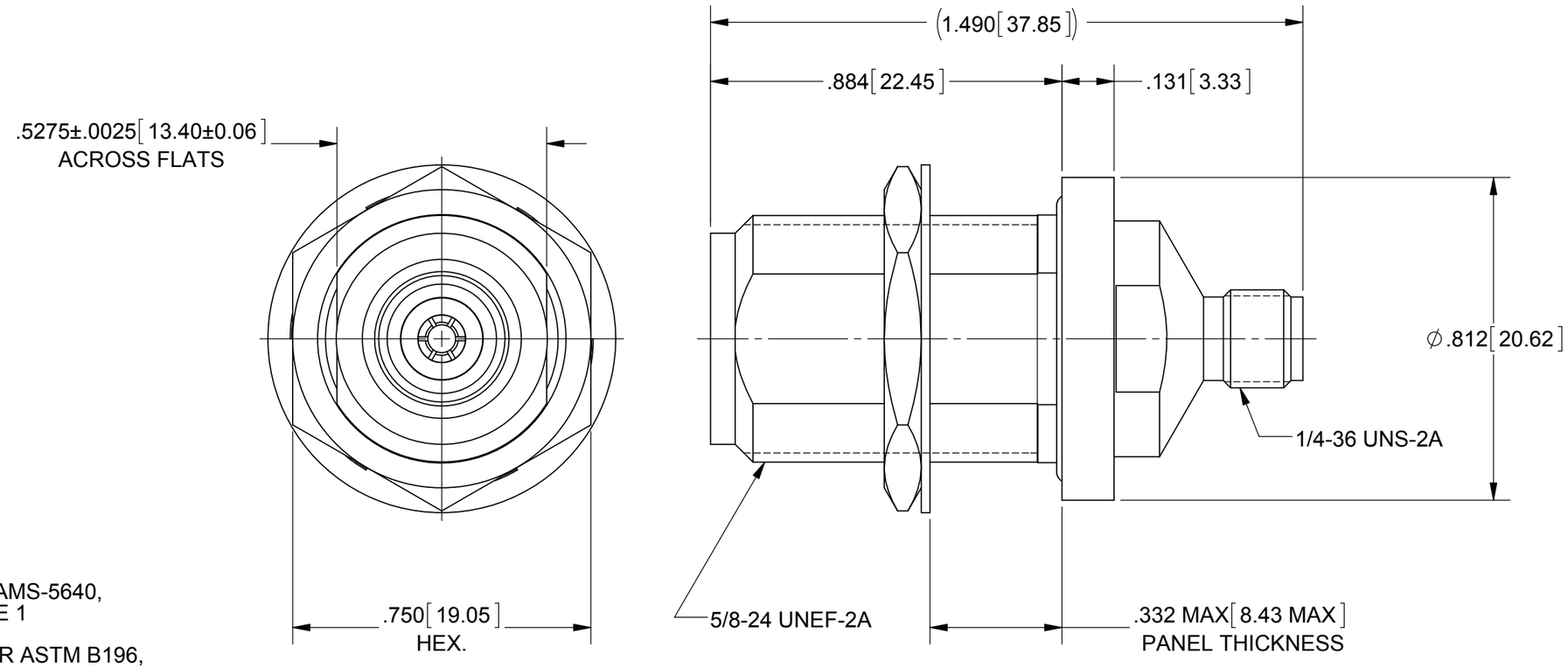

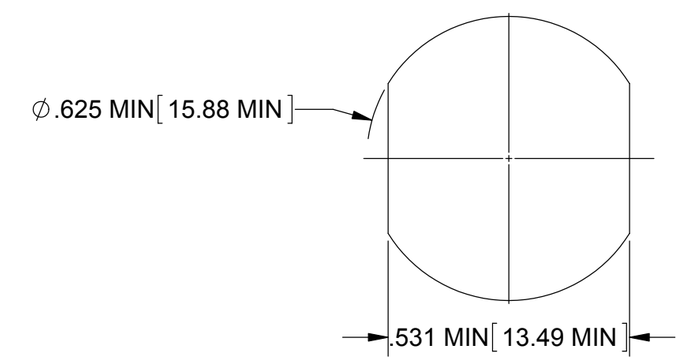

RECOMMENDED MOUNTING HOLE

MATERIAL:

BODY, SLEEVE, LOCK WASHER & HEX NUT:	STAINLESS STEEL PER AMS-5640, ALLOY UNS S30300, TYPE 1
CONTACTS:	BERYLLIUM COPPER PER ASTM B196, ALLOY No. UNS C17300, TD04
INSULATORS::	PTFE PER ASTM D1710, TYPE I, GRADE 1, CLASS B
O-RING:	SILICONE RUBBER PER A-A-59588, CLASS 2B, GRADE 50/60
GLASS BEAD:	CORNING #7052 OR EQUIVELANT
PIN:	KOVAR PER ASTM F15

FINISH:

BODY, SLEEVE, LOCK WASHER & HEX NUT	PASSIVATED PER AMS-2700
CONTACTS:	GO LD PER ASTM B488, TYPE II, CODE C, CLASS .76, OVER NICKEL PER AMS-QQ-N-290, CLASS 1, .00005" MIN.
PIN:	NICKEL PER AMS-QQ-N-290, CLASS 1

PERFORMANCE:

IMPEDANCE:	50 OHMS
FREQ. RANGE:	DC TO 18.0 GHz

MATERIAL: SEE NOTES

FINISH: SEE NOTES

SURFACE AREA: N/A

PROPRIETARY

THE INFORMATION CONTAINED IN THIS DRAWING IS THE SOLE PROPERTY OF SV MICROWAVE, INC. ANY REPRODUCTION IN PART OR AS A WHOLE WITHOUT THE WRITTEN PERMISSION OF SV MICROWAVE, INC IS PROHIBITED.

DIMENSIONS ARE IN INCHES TOLERANCES:

FRACTIONAL: ±1/64 ANGULAR: X° ±1°0' X°X' ±15'

DECIMAL: .X ±.030 .XX ±.010 .XXX ±.005

INTERPRET DIMENSIONS AND TOLERANCES PER ASME Y14.5M - 1994

THIRD ANGLE PROJECTION

UNLESS OTHERWISE SPECIFIED

1) ALL DIMENSIONS ARE IN INCHES [MILLIMETERS]
2) ALL DIMENSIONS ARE AFTER PLATING.
3) BREAK CORNERS & EDGES .005 R. MAX.
4) CHAM. 1ST & LAST THREADS.
5) SURFACE ROUGHNESS 63₄MIL-STD-10.
6) DIA.'S ON COMMON CENTERS TO BE CONCENTRIC WITHIN .005 T.I.R.
7) REMOVE ALL BURRS

DRAWN:	GPF 10/02/15
CHECKED:	DAL 10/02/15
APPROVED:	JM 03/01/79

Amphenol SV MICROWAVE
2400 Centrepark West Drive, Suite 100
West Palm Beach, FL 33409

TITLE: PN JACK TO SMA JACK, HERMETIC SEAL, BLKHD MT ADAPTER

SIZE	CAGE CODE	DWG. NO.
B	95077	SF1104-6007

SCALE: 3:1

SHEET 1 OF 1