samtec

TIGER EYE™ SYSTEM

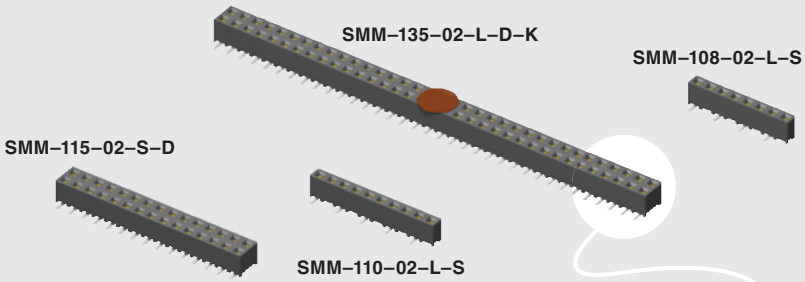

(2,00 mm) .0787"

SMM SERIES

TIGER EYE™ SOCKET STRIP

SPECIFICATIONS

For complete specifications and recommended PCB layouts see www.samtec.com?SMM

Insulator Material:
Black Liquid Crystal Polymer
Contact Material:
BeCu
Plating: Sn or Au over 50µ" (1,27 µm) Ni
Current Rating (TMM/SMM):
3.2 A per pin
(1 pin powered per row)
Voltage Rating:
350 VAC
Operating Temp Range:
-55°C to +125°C
Contact Resistance:
10 mΩ
Insertion Depth:
(3,05 mm) .120" to
(3,25 mm) .128"
Insertion Force:
(Single contact only)
2.0 oz (0,56 N) average
Withdrawal Force:
(Single contact only)
1.5 oz (0,42 N) average
Max Cycles:
100 with 10µ" (0,25 µm) Au
RoHS Compliant:
Yes

Processing:

Lead–Free Solderable:
Yes
SMT Lead Coplanarity:
(0,10 mm) .004" max

RECOGNITIONS

For complete scope of recognitions see www.samtec.com/quality

FILE NO. E111594

ALSO AVAILABLE
(MOQ Required)

- Locking clip (Manual placement required)
- Other platings

Contact Samtec.

POLARIZING KEY

Specify PK–01–07 for polarizing key (Available in wheels of six each). Also polarizes TCSD Series IDC Cable.

Note: Some lengths, styles and options are non-standard, non-returnable.

Mates with:
TMM, TMMH, MTMM, MMT, LTMM, TW, TCMD, PTT, ZLTMM

E.L.P.™
EXTENDED LIFE PRODUCT
10 year Mixed Flowing Gas with 30µ" Gold
Call Samtec for maximum mated cycles

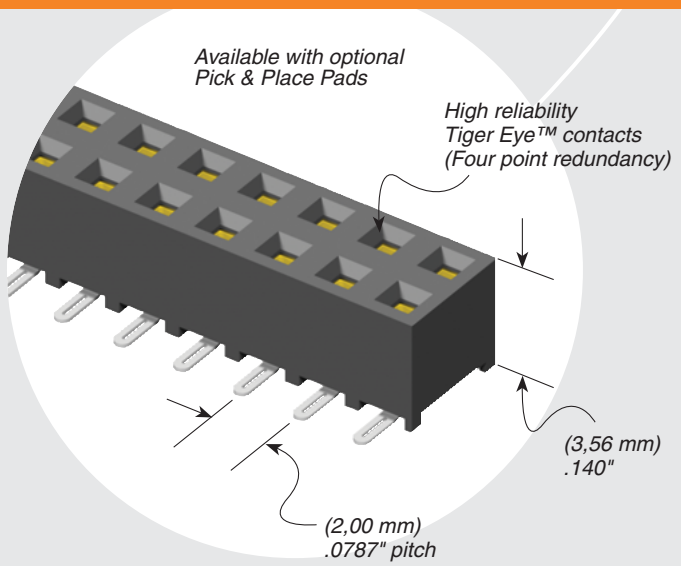

SMM	–	1	NO. PINS PER ROW	–	02	–	PLATING OPTION	–	ROW OPTION	–	OTHER OPTION
			02 thru 40				–F = Gold flash on contact, Matte Tin on tail –L = 10µ" (0,25 µm) Gold on contact, Matte Tin on tail –S = 30µ" (0,76 µm) Gold on contact, Matte Tin on tail		–S = Single Row –D = Double Row		–"XX" = Polarized Position –K = (5,50 mm) .217" DIA Polyimide Film Pick & Place Pad (2 positions minimum, –02 thru –05 requires –TR) –P = Plastic Pick & Place Pad (–02 thru –05 requires –TR) –TR = Tape & Reel Packaging (27 positions maximum)

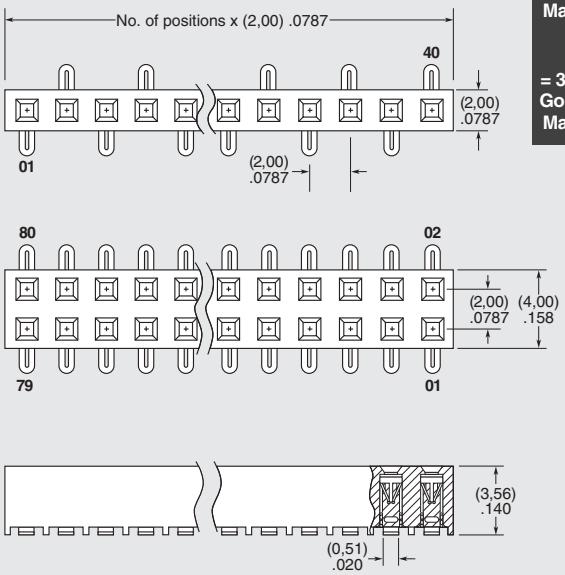

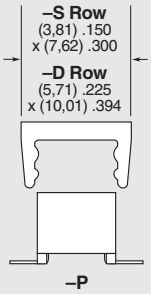

Due to technical progress, all designs, specifications and components are subject to change without notice.