PRODUCT NUMBER	MATERIAL COLOR	MATERIAL TYPE
65824-001	BLUE	POLYESTER PET
65824-002	BLACK	POLYESTER PBT
65824-003	GRAY	POLYESTER PBT
65824-004	BLACK	POLYESTER PET
65824-005	BLACK	POLYPHENYLENE SULFIDE PPS
65824-006	BLUE	POLYESTER PBT
65824-007	BLACK	POLYESTER PCT

NOTES
1 MATERIAL TYPE AND COLOR: SEE TABLE.
FLAME RETARDANT PER UL94V-0
2 ADD "LF" SUFFIX AT THE END OF PART NUMBER FOR LEAD FREE OPTION.
3 IF "LF" P/N THE PRODUCT MEETS EUROPEAN UNION DIRECTIVES AND OTHER COUNTRY REGULATION AS DESCRIBED IN GS-22-008.
4 THE HOUSING WILL WITHSTAND EXPOSURE TO 260° PEAK TEMPERATURE FOR 15 SECONDS IN A WAVE SOLDER APPLICATION WITH A 1.5mm MINIMUM THICK CIRCUIT BOARD. SEE APPLICATION NOTES/PROCEDURES IF THEY ARE AVAILABLE.

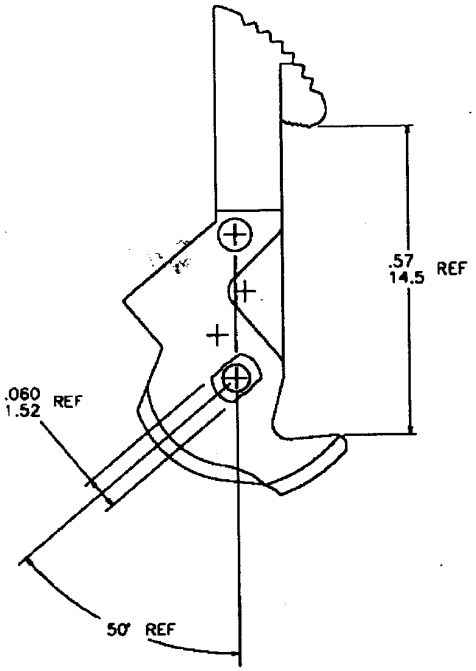

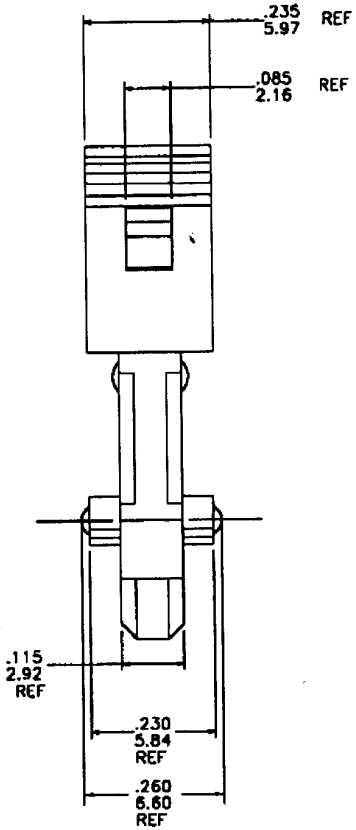

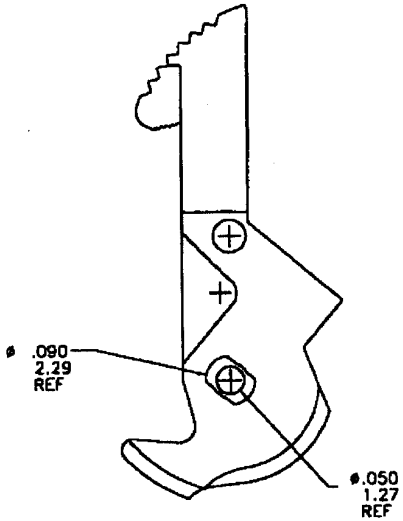

REVISIONS			
REV	ECN/DOR#	BY	DATE
J	V23809	MSC	2/23/93
K	V31706	MSC	11/2/93
L	V61149	EPK	8/15/96
M	N06-0112	LONG	4/18/06

SHEET INDEX | ISSUE M | SH NO. 1

TOLERANCES UNLESS OTHERWISE SPECIFIED
LINEAR .00± .01 / .04 .3 / .0000± .005 / .000± .13 / .0000± .0010 / .0000± .051
ANGLES 0± 2°

MAT SEE NOTE 1
FINISH –
PRODUCT FAMILY QUICKIE

DR D.WHITING 6/12/90
CHKD M.SMYK 6/12/90
CHK M.SMYK 6/12/90
APPD M.SMYK 6/12/90

CUSTOMER COPY
THIRD ANGLE PROJ
UNIT INCH MM

BERG ELECTRONICS

TITLE SEA-HORSE LATCH

SCALE 10/1 | SIZE D | DWG NO. 65824 | SHEET 1 OF 1

PDM: Rev:M STATUS:Released Printed: Apr 12, 2011