FO-50360-L

**CW-B9729**
SUPERSEDES
**X115337-V7**

| REV | DOCUMENT | CHANGED BY | CHECK |
|---|---|---|---|
| A | 0002737 | CSL 23DEC03 | MDM |

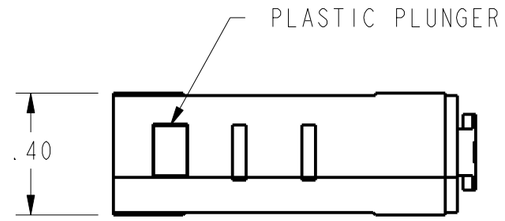


NOTE
1 - MAXIMUM MECHANICAL DEAD BREAK OF .0025 MAY BE EXPECTED WITH THIS SWITCH CONSTRUCTION

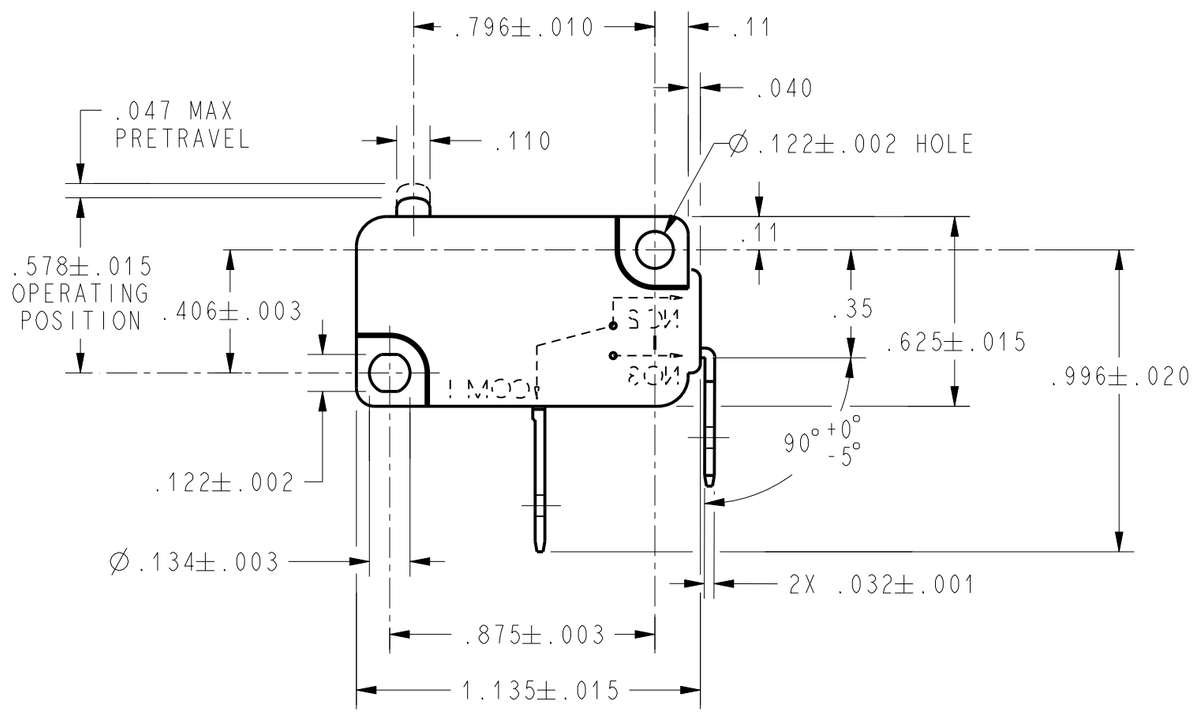


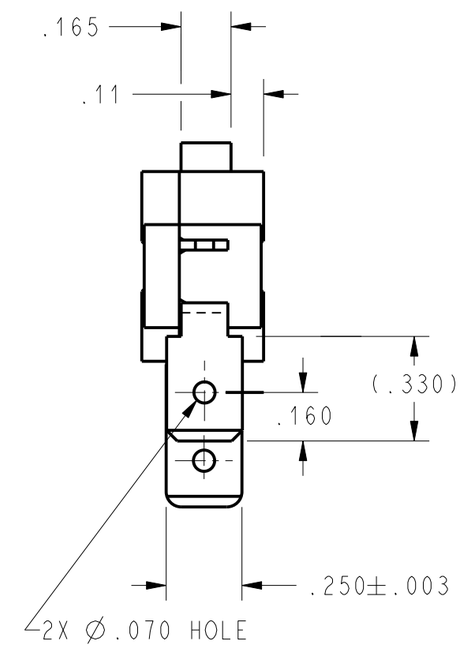


| CHARACTERISTICS | |
|---|---|
| OPERATING FORCE | 225 GRAMS MAX |
| RELEASE FORCE | 20 GRAMS MIN |
| DIFFERENTIAL TRAVEL | .010 MAX |
| OVERTRAVEL | .050 MIN |
| FREE POSITION | .625 MAX |
| RELEASE TRAVEL | .010 MIN |

**ELECTRICAL DATA**

CONTACT ARRANGEMENT
S P N O

25A, 277 VAC
1HP, 125 VAC
2HP, 250 VAC

20 (5) ~ 250
T85 1E5 µ

UNLESS OTHERWISE SPECIFIED TOLERANCES ARE: [X] US(inch) CUSTOMARY [ ] SI(mm) METRIC

| | | | |
|---|---|---|---|
| NO PLACE | X | ±.040 | ±1 |
| ONE PLACE | .X | ±.030 | ±0,4 |
| TWO PLACE | .XX | ±.015 | ±0,15 |
| THREE PLACE | .XXX | ±.005 | ± |
| ANGLES | | ± | ± |

RAW MATERIAL-COMMERCIAL STANDARD

THIRD ANGLE PROJECTION

| | | |
|---|---|---|
| DRAWN | CSL | 23DEC03 |
| CHECK | MDM | 23DEC03 |

THIS DRAWING COVERS A PROPRIETARY ITEM AND IS THE PROPERTY OF HONEYWELL. THIS DRAWING IS NOT TO BE COPIED OR USED WITHOUT THE PERMISSION OF HONEYWELL.

DIMENSIONS ARE TO BE MET BEFORE PROTECTIVE COATINGS ARE APPLIED

PTC 2D | ASME Y14.5M-1994

**Honeywell**

TITLE
**SWITCH, BASIC**

| SIZE | DWG TYPE | DRAWING NAME | REV |
|---|---|---|---|
| B | I | V7-1Z20E94 | A |

SCALE 2 : 1 | WEIGHT | SHEET 1 OF 1