HW Series — 22mm IEC Style Global Pushbuttons

HW: The Best Engineered Switch in the World
Key features include:

- *Locking lever removable contact blocks*
- *Finger-safe IP20 contacts as standard, other terminal styles available*
- *Tamperproof construction*
- *All E-stops meet EN418 and are compliant with SEMI S2 standards*
- *Worldwide approvals*
- *Easy to assemble*
- *Available assembled or as sub-components*
- *Choice of black plastic or metallic front bezels*
- *Incandescent or LED illumination*
- *Transformer or full voltage*
- *Slow make double break self cleaning contacts*

IDEC's HW switches are "The best engineered switch in the world" for a reason. Carrying the CE mark, UL, CSA, CCC (Chinese), and TUV approvals, these switches are designed for use in almost any part of the world.

Complete with finger-safe contact blocks offering IP20 protection, these 7/8" (22mm) switches include illuminated and non-illuminated pushbuttons, pilot lights, selector switches, and emergency stop switches.

All switches also incorporate mechanically keyed safety locking levers, ensuring correct installation and maintaining safety in high-vibration applications.

File No. E68961

File No. LR92374

TÜV Rheinland
Registration No. R9551089 (E-stops)
Registration No. R50054316 (Dual Pushbuttons)
Registration No. J9650511 (Pilot Lights)
Registration No. J9551458 (all other switches)

Certificate No. 2005010305145656

Specifications

Conforming to Standards	EN60947-1, EN60947-5-1, VDE0660-200, UL508, CSA C22-2 No.14
Approvals File No. E68961 File No. LR92374 Certificate No. 2005010305145656 TÜV Rheinland Registration No. R9551089 (E-stops) Registration No. J9551458 (all other switches) Registration No. J9650511 (Pilot Lights)	**CSA:** pushbuttons and selector switches: A600 pilot lights and illuminated pushbuttons, direct supply pilot lights and illuminated pushbuttons with integral transformer (100/110, 115, 120, 200/220, 230, 240, 380, 400/440, 480V) **UL:** pushbuttons and selector switches: A600 pilot lights and illuminated pushbuttons, direct supply pilot lights and illuminated pushbuttons with integral transformer (100/110, 115, 120, 200/220, 230, 240, 380, 400/440, 480V) **TÜV:** pushbuttons and selector switches: A600=P600 (NO, NC)/Q600 (NO-EM, NC-LB) pilot lights and illuminated pushbuttons, direct supply pilot lights and illuminated pushbuttons with integral transformer (100/110, 115, 120, 200/220, 230, 240, 380, 400/440, 480V)
Operating Temperature	Operation: –25 to +50°C (without freezing), Storage: –40 to +70°C (without freezing)
Vibration Resistance	10 to 55Hz, 98m/sec^2 (10G) conforming to IEC6068-2-6
Shock Resistance	980m/sec^2 (100G) conforming to IEC6068-2-7
Electric Shock Protection	Class 0 conforming to IEC60536
Degree of Protection (conforming to IEC60529) (conforming to NEMA ICS6-110)	IP65 (from front of the panel) IP20 (Type HW-F contact block) NEMA 1, 2, 3, 3R, 3S, 4, 4X, 5, 12, 13 (from front of panel)
Mechanical Life	Momentary pushbuttons: 5,000,000 (900 operations per hour), All other switches: 500,000
Pollution Degree (conforming to IEC60947-1)	3 for switches not using a transformer, 2 for switches using a transformer
Rated Operational Characteristics	AC-15: A600 or Ue = 250V, Ie = 3A (NO, NC, NO-EM, NC-LB) DC-13: P600 or Ue = 125V, Ie = 1.1A (NO, NC) DC-13: Q600 or Ue = 125V, Ie = 0.9A (NO-EM, NC-LB)
Rated Insulation Voltage	600V
Rated Switching Over-Voltage	Less than 4kV, conforming to IEC60947-1
Rated Impulse Withstanding Voltage	4kV for contact circuit, 2.5kV for lamp circuit
Rated Thermal Current	10 Amp
Minimum Switching Capacity	5 mA at 3V AC/DC
Contact Operation	Slow break NC or NO, self-cleaning
Positive Action Operation (Emergency Stops with NC contacts)	5.5mm to 10mm travel to latch 45N minimum force to latch 10mm maximum travel 1,800 operations per hour maximum for a Pushlock Turn Reset 900 operations per hour maximum for a Push-Pull
Operating Force	Flush and extended pushbuttons—with 1NO or 1NC contact: 6.2±2N (momentary), 7.0±2N (maintained) Additional contacts—1NO or 1NC: +3.2N (momentary), + 3.3N (maintained)
Terminal Referencing	Conforming to CENELEC EN50005
Recommended Terminal Torque	0.8 N m (7.1 in lb.)
External Short-Circuit Protection	10A 250V fuse conforming to IEC60269-1
Applicable Wire Size	Minimum 1 x 22 AWG, max. 2 x 14 AWG or 1 x 12 AWG
Contact Resistance	Initial contact resistance of 50mΩ or less
Contact Gap	4mm (NO and NC), 2mm (NO-EM and NC-LB)
Horsepower Rating	Reference Value: 1/4 HP @ 120V (1ø non-reversing), 1HP @ 240V (3ø non-reversing)
Electrical Reliability	MTBF < 1 fault for 10 million operation cycles (3V DC, 5mA)
Lamp Ratings	Incandescent: 1 W LEDs: 6V/17mA max, 12V & 24V/11mA max, 120 & 240V/10mA max
Maximum Inrush Current	40 A (40 ms)
Contact Material	Silver (gold plated contacts available - contact IDEC)

Contact Ratings

Pushbuttons Illuminated Pushbuttons Selector Switches Illuminated Selector Switches Pushbutton Selectors	Contact Block	Type HW-C/HW-F /HW-G
	Rated Insulation Voltage	600V
	Rated Continuous Current	10A
	Contact Ratings by Utilization Category IEC 60947-5-1	AC-15 (A600) DC-13 (P600)

Characteristics

Operational Voltage			24V	48V	50V	110V	220V	440V
Operational Current	AC 50/60 Hz	AC-12 Control of resistive loads & solid state loads	10A	—	10A	10A	6A	2A
		AC-15 Control of electromagnetic loads (> 72VA)	10A	—	7A	5A	3A	1A
	DC	DC-12 Control of resistive loads & solid state loads	8A	5A	—	2.2A	1.1A	—
		DC-13 Control of electromagnets	5A	2A	—	1.1A	0.6A	—

1. *For dimensions, see page A3-100.*
2. *For life expectancy derating curves, see page A3-105.*

Non-Illuminated Pushbuttons (Assembled)

Part Numbers: Non-Illuminated Pushbuttons

Style	Contact	Plastic Bezel		Metal Bezel	
		Momentary	Maintained	Momentary	Maintained
Round Flush	1NO 1NC 1NO-1NC 2NO 2NC 2NO-2NC	HW1B-M1F10-① HW1B-M1F01-① HW1B-M1F11-① HW1B-M1F20-① HW1B-M1F02-① HW1B-M1F22-①	HW1B-A1F10-① HW1B-A1F01-① HW1B-A1F11-① HW1B-A1F20-① HW1B-A1F02-① HW1B-A1F22-①	HW4B-M1F10-① HW4B-M1F01-① HW4B-M1F11-① HW4B-M1F20-① HW4B-M1F02-① HW4B-M1F22-①	HW4B-A1F10-① HW4B-A1F01-① HW4B-A1F11-① HW4B-A1F20-① HW4B-A1F02-① HW4B-A1F22-①
Round Extended	1NO 1NC 1NO-1NC 2NO 2NC 2NO-2NC	HW1B-M2F10-① HW1B-M2F01-① HW1B-M2F11-① HW1B-M2F20-① HW1B-M2F02-① HW1B-M2F22-①	HW1B-A2F10-① HW1B-A2F01-① HW1B-A2F11-① HW1B-A2F20-① HW1B-A2F02-① HW1B-A2F22-①	HW4B-M2F10-① HW4B-M2F01-① HW4B-M2F11-① HW4B-M2F20-① HW4B-M2F02-① HW4B-M2F22-①	HW4B-A2F10-① HW4B-A2F01-① HW4B-A2F11-① HW4B-A2F20-① HW4B-A2F02-① HW4B-A2F22-①
29mm Mushroom Head	1NO 1NC 1NO-1NC 2NO 2NC 2NO-2NC	HW1B-M3F10-① HW1B-M3F01-① HW1B-M3F11-① HW1B-M3F20-① HW1B-M3F02-① HW1B-M3F22-①	HW1B-A3F10-① HW1B-A3F01-① HW1B-A3F11-① HW1B-A3F20-① HW1B-A3F02-① HW1B-A3F22-①	HW4B-M3F10-① HW4B-M3F01-① HW4B-M3F11-① HW4B-M3F20-① HW4B-M3F02-① HW4B-M3F22-①	HW4B-A3F10-① HW4B-A3F01-① HW4B-A3F11-① HW4B-A3F20-① HW4B-A3F02-① HW4B-A3F22-①
40mm Mushroom Head	1NO 1NC 1NO-1NC 2NO 2NC 2NO-2NC	HW1B-M4F10-① HW1B-M4F01-① HW1B-M4F11-① HW1B-M4F20-① HW1B-M4F02-① HW1B-M4F22-①	HW1B-A4F10-① HW1B-A4F01-① HW1B-A4F11-① HW1B-A4F20-① HW1B-A4F02-① HW1B-A4F22-①	HW4B-M4F10-① HW4B-M4F01-① HW4B-M4F11-① HW4B-M4F20-① HW4B-M4F02-① HW4B-M4F22-①	HW4B-A4F10-① HW4B-A4F01-① HW4B-A4F11-① HW4B-A4F20-① HW4B-A4F02-① HW4B-A4F22-①
60mm Jumbo Mushroom Head	1NO 1NC 1NO-1NC 2NO 2NC 2NO-2NC	HW1B-M5F10-①* HW1B-M5F01-①* HW1B-M5F11-①* HW1B-M5F20-①* HW1B-M5F02-①* HW1B-M5F22-①*	—	—	—
Square Flush	1NO 1NC 1NO-1NC 2NO 2NC 2NO-2NC	HW2B-M1F10-① HW2B-M1F01-① HW2B-M1F11-① HW2B-M1F20-① HW2B-M1F02-① HW2B-M1F22-①	HW2B-A1F10-① HW2B-A1F01-① HW2B-A1F11-① HW2B-A1F20-① HW2B-A1F02-① HW2B-A1F22-①	—	—
Square Extended	1NO 1NC 1NO-1NC 2NO 2NC 2NO-2NC	HW2B-M2F10-① HW2B-M2F01-① HW2B-M2F11-① HW2B-M2F20-① HW2B-M2F02-① HW2B-M2F22-①	HW2B-A2F10-① HW2B-A2F01-① HW2B-A2F11-① HW2B-A2F20-① HW2B-A2F02-① HW2B-A2F22-①	—	—

① Button Color Code

Color	Code
Black	B
Green	G
Red	R
Blue	S
White	W
Yellow	Y
Grey	N*

** Grey is available for Round Flush models only.*

1. *In place of ①, specify the Button Color Code.*
2. **Jumbo mushroom available only in red, green, black, and yellow.*
3. *For nameplates and accessories, see page A3-96 and A3-98.*
4. *For dimensions, see page A3-100.*
5. *For sub-assembly part numbers, see page A3-56.*

Non-Illuminated Pushbuttons (Partial-Assemblies)

Contact Assembly + Operator Assembly + Complete Switch

Part Numbers: Operator Assemblies

Style		Plastic Bezel	Metal Bezel
Round Flush	Momentary	HW1B-M1-①	HW4B-M1-①
	Maintained	HW1B-A1-①	HW4B-A1-①
Round Extended	Momentary	HW1B-M2-①	HW4B-M2-①
	Maintained	HW1B-A2-①	HW4B-A2-①
29mm Mushroom Head	Momentary	HW1B-M3-①	HW4B-M3-①
	Maintained	HW1B-A3-①	HW4B-A3-①
40mm Mushroom Head	Momentary	HW1B-M4-①	HW4B-M4-①
	Maintained	HW1B-A4-①	HW4B-A4-①
60mm Mushroom Head	Momentary	HW1B-M5-①*	–

*60mm mushroom available in red, green, black and yellow only.

Style		Plastic Bezel	Metal Bezel
Square Flush	Momentary	HW2B-M1-①	–
	Maintained	HW2B-A1-①	–
Square Extended	Momentary	HW2B-M2-①	–
	Maintained	HW2B-A2-①	–

1. *In place of ①, specify the Button Color Code from table below.*
2. *For complete sub-assemblies, see page A3-56.*

Part Numbers: Contact Assemblies

Style	Contacts	Part Number
Standard Fingersafe Contacts	1NO 1NC 1NO/1NC 2NO 2NC 2NO/2NC	HW-CBF10 HW-CBF01 HW-CBF11 HW-CBF20 HW-CBF02 HW-CBF22
Spring Up Terminal Contacts	1NO 1NC 1NO/1NC 2NO 2NC 2NO/2NC	HW-CB10 HW-CB01 HW-CB11 HW-CB20 HW-CB02 HW-CB22

① Button Color Code

Color	Code
Black	B
Green	G
Red	R
Blue	S
White	W
Yellow	Y
Grey	N*

**Grey is available for round flush only.*

Non-Illuminated Pushbuttons (Sub-Assembled)

Contact Blocks	+	Adaptor & Safety Lever Lock	+	Anti-Rotation Ring	+	Operator	+	Button	=	Complete Part

Part Numbers: Operators

Style		Plastic Bezel	Metal Bezel
Round Flush/Extended	Momentary	HW1B-M0	HW4B-M0
	Maintained	HW1B-A0	HW4B-A0
Ø 29mm Mushroom Ø 40mm Mushroom	Momentary	HW1B-M0L	HW4B-M0L
	Maintained	HW1B-A0L	HW4B-A0L
Ø 60mm Jumbo Mushroom	Momentary	HW1B-M5-①*	–
Square Flush Extended	Momentary	HW2B-M0	–
	Maintained	HW2B-A0	–

1. *In place of ①, specify the Button Color Code from table below.*
2. **60mm mushroom operator includes non-removable button (available in red, black, green and yellow only).*
3. *For nameplates and accessories, see page A3-96.*
4. *For dimensions, see page A3-100.*

① Button Color Code

Color	Code	Color	Code
Black	B	White	W
Green	G	Yellow	Y
Red	R	Grey	N†
Blue	S		

1. *HW1B-M5 available only in black, red green and yellow.*
2. *†Grey available for round flush only.*

Part Numbers: Contact Blocks

Style	1NO	1NC
Standard Fingersafe Contacts (IP20)	HW-F10 HW-F10R (early make)	HW-F01 HW-F01R (late break)
Spring-Up Terminal Contacts	HW-G10 HW-G10R (early make)	HW-G01 HW-G01R (late break)
Exposed Screw Terminal Contacts	HW-C10 HW-C10R (early make)	HW-C01 HW-C01R (late break)
Dummy Block	TW-DB	

1. *All assembled part numbers in catalog include standard (HW-F...) contacts.*
2. *Assembled units with spring-up terminals (HW-G...) can be ordered by removing an "F" from the part number (Ex. HW1B-M1F11-R becomes HW1B-M111-R).*
3. *Units with exposed screw terminals (HW-C...) must be ordered as sub-components.*
4. *All contacts (including non-fingersafe versions) are UL, CSA, and IEC compliant and carry the CE mark.*

Part Numbers: Anti-Rotation Ring

Appearance	Part Number
	HW9Z-RL

Use with notched panel cutout to prevent unit rotation.

Part Numbers: Buttons

Style	Part Number
Round Flush	HW1A-B1-①
Round Extended	HW1A-B2-①
Ø 29mm Mushroom Cap	HW1A-B3-①
Ø40mm Mushroom Cap	HW1A-B4-①
Square Flush	HW2A-B1-①
Square Extended	HW2A-B2-①

Part Number: Contact Block Mounting Adaptor

(safety lever lock included)

Style	Part Number
	HW-CB2C

1. *Used to mount contact blocks to operator (first pair only).*
2. *IDEC strongly recommends using the safety lever lock (included) to prevent heavy vibration or maintenance personnel from inadvertently unlocking contacts.*

Emergency Stop Pushbuttons (Assembled)

Part Numbers: Non-Illuminated Emergency Stop Pushbuttons

Style	Contact	Plastic Bezel	Metal Bezel
ø 40mm Head Push–Pull	1NO 1NC 1NO-1NC 2NC 2NO	HW1B-Y2F10-①† HW1B-Y2F01-①† HW1B-Y2F11-①† HW1B-Y2F02-①† HW1B-Y2F20-①†	HW4B-Y2F10-①† HW4B-Y2F01-①† HW4B-Y2F11-①† HW4B-Y2F02-①† HW4B-Y2F20-①†
ø 29mm Head Pushlock Turn Reset	1NO 1NC 1NO-1NC 2NO 2NC	HW1B-V3F10-R* HW1B-V3F01-R* HW1B-V3F11-R* HW1B-V3F20-R* HW1B-V3F02-R*	HW4B-V3F10-R* HW4B-V3F01-R* HW4B-V3F11-R* HW4B-V3F20-R* HW4B-V3F02-R*
ø 40mm Head Pushlock Turn Reset	1NO 1NC 1NO-1NC 2NO 2NC	HW1B-V4F10-①† HW1B-V4F01-①† HW1B-V4F11-①† HW1B-V4F20-①† HW1B-V4F02-①†	HW4B-V4F10-①† HW4B-V4F01-①† HW4B-V4F11-①† HW4B-V4F20-①† HW4B-V4F02-①†
ø 40mm Head EMO Pushlock Turn Reset	1NO 1NC 1NO-1NC 2NO 2NC	HW1B-V4F10-R-EMO-2 HW1B-V4F01-R-EMO-2 HW1B-V4F11-R-EMO-2 HW1B-V4F20-R-EMO-2 HW1B-V4F02-R-EMO-2	HW4B-V4F10-R-EMO-2 HW4B-V4F01-R-EMO-2 HW4B-V4F11-R-EMO-2 HW4B-V4F20-R-EMO-2 HW4B-V4F02-R-EMO-2
ø 40mm Head Pushlock Key Reset	1NO 1NC 1NO-1NC 2NO 2NC	HW1B-X4F10-R* HW1B-X4F01-R* HW1B-X4F11-R* HW1B-X4F20-R* HW1B-X4F02-R*	HW4B-X4F10-R* HW4B-X4F01-R* HW4B-X4F11-R* HW4B-X4F20-R* HW4B-X4F02-R*
ø 60mm Head Pushlock Turn Reset	1NO 1NC 1NO-1NC 2NO 2NC	HW1B-V5F10-R* HW1B-V5F01-R* HW1B-V5F11-R* HW1B-V5F20-R* HW1B-V5F02-R*	–
ø 40mm Head Unibody Pushlock Turn Reset	1NO-1NC 2NC 1NO-2NC	HW1E-BV4F11-R* HW1E-BV4F02-R* HW1E-BV412R-TK2093-1**	–

Part Numbers: Illuminated Emergency Stop Pushbuttons

Style	Illumination Type	Contact	Part Number
	LED	1NO-1NC 2NC 2NC (with active lamp circuit) 1NO-1NC (with active lamp circuit)	HW1E-LV4F11QD-R*-③ HW1E-LV4F02QD-R*-③ HW1E-TV4F02QD-R*-③ HW1E-TV4F11QD-R*-③
	Incandescent	1NO-1NC 2NC 1NO-1NC (with active lamp circuit) 2NC (with active lamp circuit)	HW1E-LV4F11Q-R*-③ HW1E-LV4F02Q-R*-③ HW1E-TV4F11Q-R*-③ HW1E-TV4F02Q-R*-③

Part Numbers: Nameplates

HWAV–Yellow Plastic

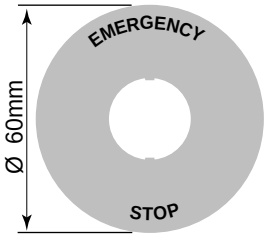

Style	Part Number
60mm Diameter "Emergency Stop"	HWAV-27†
60mm Diameter Blank	HWAV-0
80mm Diameter "Emergency Stop" (for jumbo mushroom use)	HWAV5-27

† HWAV-27 comes marked "Emergency Stop" as shown in drawing.

Part Numbers: E-Stop Shrouds

Style	Part Number
	HW9Z-KG1-TK2120
	HW9Z-KG2-TK2120

Not applicable for 60mm mushroom.

Terminal Numbering (Unibody only)

Models	Terminal Number
1NO-1NC	NO = .3/.4, NC = .1/.2
2NC	NC = 11/12, NC = 21/22
HW1E-L HW1E-T	Lamp + = X2, Lamp - = X1

③ Full Voltage Code

Voltage	Code
6VAC/DC	6V
12VAC/DC	12V
24VAC/DC	24V

1. ** Available in Red only.*
2. *† Available in red or yellow (insert color code in place of ①)*
3. *In place of ③, specify Full Voltage Code.*
4. *With single unit construction, the positive action contacts are integrated in the body of the switch. This provides an extra degree of safety and reliability for critical emergency stop functions.*
5. *In the illuminated version, the light is independent of the switch action (except active lamp circuit model).*
6. *For nameplates and accessories, see page A3-96.*
7. *For dimensions, see page A3-100.*
8. *For sub-assembly part numbers, see next page.*
9. *All HW series E-stops comply with EN418, the IEC "E-Stop Addendum to the Low Voltage Directive," this includes "tamper proof" operation whereby a change of contact state is not possible by "teasing" or "floating" the operator.*
10. *"Active Lamp Circuit" consists of a built-in Normally Open contact in series with the lamp. This allows the lamp to illuminate only when the button is pressed and eliminates the need for external jumpering.*
11. *Replacement Lens is HWLV-LENSR.*

Emergency Stop Pushbuttons (Partial-Assemblies)

Contact Assembly + Anti-Rotation Ring + Operator Assembly + Complete Switch

Part Numbers: Operators

Style		Plastic Bezel	Metal Bezel
Ø 29mm Head Pushlock Turn Reset		HW1B-V3R*	HW4B-V3R*
Ø 40mm Head Pushlock Turn Reset	red	HW1B-V4R	HW4B-V4R
	yellow	HW1B-V4Y	HW4B-V4Y
Ø 40mm Head EMO Pushlock Turn Reset		HW1B-V4R-EMO-2*	HW4B-V4R-EMO-2*
Ø 40mm Head Push-Pull	red	HW1B-Y2R	HW4B-Y2R
	yellow	HW1B-Y2Y	HW4B-Y2Y
Ø 40mm Head Pushlock Key Reset		HW1B-X4R*	HW4B-X4R*
Ø 60mm Head Pushlock Turn Reset		HW1B-V5R*	–

1. *Available in red only.
2. All HW Series Emergency Stop operators include non-removable color caps.
3. All HW Series Emergency Stop operators comply with EN418 "E-Stop Addendum to the Low Voltage Directive" (when used as part of a complete HW series Emergency Stop Pushbutton).
4. All HW series Emergency Stop switches comply with SEMI S2 standards.

Part Numbers: Anti-Rotation Ring

Appearance	Part Number
	HW9Z-RL

Use with notched panel cutout to prevent unit rotation.

Part Numbers: Contact Assemblies

Style	Contacts	Part Number
Standard Fingersafe Contacts	1NO 1NC 1NO/1NC 2NO 2NC 2NO/2NC	HW-CBF10 HW-CBF01 HW-CBF11 HW-CBF20 HW-CBF02 HW-CBF22
Spring Up Terminal Contacts	1NO 1NC 1NO/1NC 2NO 2NC 2NO/2NC	HW-CB10 HW-CB01 HW-CB11 HW-CB20 HW-CB02 HW-CB22

Gold contact option is available for spring-up terminals. Add suffix "MAU" to end of part number. For example, HW-CB20 becomes HW-CB20-MAU.

Emergency Stop Pushbuttons (Sub-Assembled)

Contact Blocks	+	Adaptor & Safety Lever Lock	+	Anti-Rotation Ring	+	Operator	=	Complete Part

Part Numbers: Emergency Stop Operators

Style		Plastic	Metal
Ø 29mm Head Pushlock Turn Reset		HW1B-V3R*	HW4B-V3R*
Ø 40mm Head Pushlock Turn Reset	red	HW1B-V4R	HW4B-V4R
	yellow	HW1B-V4Y	HW4B-V4Y
Ø 40mm Head EMO Pushlock Turn Reset		HW1B-V4R-EMO-2*	HW4B-V4R-EMO-2*
Ø 40mm Head Push-Pull	red	HW1B-Y2R	HW4B-Y2R
	yellow	HW1B-Y2Y	HW4B-Y2Y
Ø 40mm Head Pushlock Key Reset		HW1B-X4R*	HW4B-X4R*
Ø 60mm Head Pushlock Turn Reset		HW1B-V5R*	–

1. *Available in red only.
2. All Emergency Stop Buttons are non-removable from the operator.

Part Number: Contact Block Mounting Adaptor
(safety lever lock included)

Style	Part Number
	HW-CB2C

1. Used to mount contact blocks to operator (first pair only).
2. IDEC strongly recommends using the safety lever lock (included) to prevent heavy vibration or maintenance personnel from unlocking contacts.

Part Numbers: Contact Blocks

Description	Part Number	
	1NO	1NC
Standard Fingersafe (IP20)	HW-F10 HW-F10R (early make)	HW-F01 HW-F01R (late break)
Spring-Up Terminal Contacts	HW-G10 HW-G10R (early make) HW-G10-MAU (gold contacts)	HW-G01 HW-G01R (late break) HW-G01-MAU (gold contacts)
Exposed Screw Terminal Contacts	HW-C10 HW-C10R (early make)	HW-C01 HW-C01R (late break)
Dummy Block	TW-DB	

1. All assembled part numbers in catalog include standard (HW-F...) contacts. (except unibody)
2. Assembled units with spring-up terminals (HW-G...) can be ordered by removing an "F" from the part number (Ex. HW1B-M1F11-R becomes HW1B-M111-R).
3. Units with exposed screw terminals (HW-C...) must be ordered as sub-components.
4. All contacts (including exposed screw) are UL, CSA, and IEC compliant and carry the CE mark.

Part Numbers: Anti-Rotation Ring

Appearance	Part Number
	HW9Z-RL

Use with notched panel cutout to prevent unit rotation.

Emergency Stop Stations

Part Numbers: Emergency Stop Stations

Description	Contacts	Plastic Bezel	Metal Bezel
Ø 40mm Pushlock Turn Reset	1NO-1NC	HW1X-BV411-R*	HW4X-BV411-R*
	2NC	HW1X-BV402-R*	HW4X-BV402-R*
Ø 29mm Pushlock Turn Reset	1NO-1NC	HW1X-BV311-R*	HW4X-BV311-R*
	2NC	HW1X-BV302-R*	HW4X-BV302-R*
Ø 40mm Push-Pull Reset	1NO-1NC	HW1X-BY411-R*	HW4X-BY411-R*
	2NC	HW1X-BY402-R*	HW4X-BY402-R*
Ø 40mm Pushlock Key Reset	1NO-1NC	HW1X-BX411-R*	HW4X-BX411-R*
	2NC	HW1X-BX402-R*	HW4X-BX402-R*

*1. * Available in Red only.*
2. Maximum of two contact blocks.
3. Available as completed unit only.
4. Box is supplied with yellow top and black bottom only.

Part Numbers: Nameplates for Emergency Stop Stations

NSA-Aluminum	Color	Part Number	
		Blank	Engraved
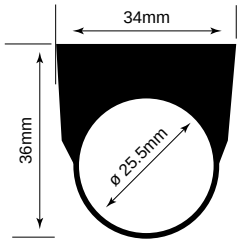	Black Red	NSA-0 NSA-0R	NSA-* NSA-*R

*1. In place of * please insert the word, letters, or numbers you would like engraved. For standard engravings, see page A3-96.*
2. For specifications on engravings, please consult factory.

Part Numbers: Base Mount Contact Blocks

Configuration	Part Number
1NO	HW-S10
1NC	HW-S01

Part Numbers: Plug Adaptors

Type	Part Number
G1/2	HW9Z-G
PG16	HW9Z-PG

Panel Mount Dimensions

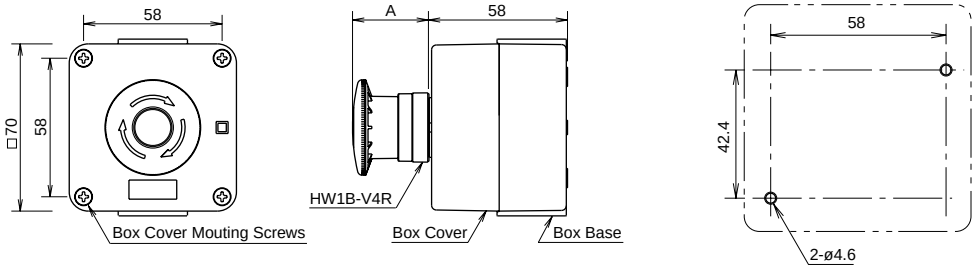

Pilot Lights (Assembled)

Part Numbers: Pilot Lights

Style			Plastic Bezel	Metal Bezel
Round Flush (Full Voltage type shown)	Full Voltage		HW1P-1FQ④-②-③	HW4P-1FQ④-②-③
	Transformer	120V AC 240V AC 480V AC	HW1P-1FH2④-② HW1P-1FM4④-② HW1P-1FT8④-②	HW4P-1FH2④-② HW4P-1FM4④-② HW4P-1FT8④-②
	DC-DC Converter*	110V DC	HW1P-1D2④-②	–
Dome (Full Voltage type shown)	Full Voltage		HW1P-2FQ④-②-③	HW4P-2FQ④-②-③
	Transformer	120V AC 240V AC 480V AC	HW1P-2FH2④-② HW1P-2FM4④-② HW1P-2FT8④-②	HW4P-2FH2④-② HW4P-2FM4④-② HW4P-2FT8④-②
	DC-DC Converter*	110V DC	HW1P-2D2④-②	–
Square Flush (Transformer type shown)	Full Voltage		HW2P-1FQ④-②-③	–
	Transformer	120V AC 240V AC 480V AC	HW2P-1FH2④-② HW2P-1FM4④-② HW2P-1FT8④-②	–
	DC-DC Converter*	110V DC	HW2P-1D2④-②	–
Jumbo Dome	Full Voltage** 24V AC/DC	LED	HW1P-5Q4-②	–
		Incandescent	HW1P-5Q7-②	

1. *In place of ②, specify the Lens/LED Color Code.*
2. *In place of ③specify the Full Voltage Code from table below.*
3. *In place of ④ specify Lamp Type Code.*
4. **DC-DC convertor voltage input from 90-140V DC, comes with spring up terminals only.*
5. ***Available with spring up terminals and 24V only.*
6. *For nameplates and accessories, see page A3-96.*
7 *For dimensions, see page A3-100.*

② Lens/LED Color Code

Color	Code
Amber	A
Green	G
Red	R
Blue	S
White	W
Yellow	Y

③ Full Voltage Code

Voltage	Code
6V AC/DC	6
12V AC/DC	12
24V AC/DC	24
120V AC (LED only)	120
240VAC (LED only)	240

④ Lamp Type Code

Lamp	Code
Incandescent	Blank
LED	D

Pilot Lights (Partial-Assemblies)

Full Voltage Models

Operator/Lens	+	Lamp	=	Complete Pilot Light

Part Numbers: Operator/Lens

Style	Plastic Bezel	Metal Bezel
Round Flush	HW1P-1FQ0-②	HW4P-1FQ0-②
Dome	HW1P-2FQ0-②	HW4P-2FQ0-②
Square Flush	HW2P-1FQ0-②	–

1. In place of ②, specify the Lens Color Code from table on previous page.
2. Operator/Lens assembly for use with standard transformers only6, not spring up terminal type.

Part Numbers: Lamps

Type	Voltage	Part Number
LED	6V AC/DC	LSTD-6②
	12V AC/DC	LSTD-1②
	24V AC/DC	LSTD-2②
	120V AC	LSTD-H2②
	240V AC	LSTD-M4②
Incandescent	6.3V AC/DC	IS-6
	12V AC/DC	IS-12
	24V AC/DC	IS-24
	30V AC/DC	IS-30

1. In place of ②, specify the LED Color Code from table on previous page.
2. The LED contains a current-limiting resistor and reverse polarity protection diodes.

Transformer Models

Transformer/Lamp	+	Operator/Lens	=	Complete

Part Numbers: Operator/Lens

Style	Plastic Bezel	Metal Bezel
Round Flush	HW1P-1F0-②	HW4P-1F0-②
Dome	HW1P-2F0-②	HW4P-2F0-②
Square Flush	HW2P-1F0-②	–

In place of ②, specify the Lens Color Code from table on previous page.

Part Numbers: Transformer/Lamp

Item	Voltage	Part Number
	120V AC with LED	HW-FH2-②
	240V AC with LED	HW-FM4-②
	480V AC with LED	HW-FT8-②
	120V AC with Incandescent	HW-FH2
	240V AC with Incandescent	HW-FM4
	480V AC with Incandescent	HW-FT8

1. In place of ②, specify the LED Color Code from table on previous page.
2. All transformers have a 6V AC secondary voltage.
3. LED/Lamp supplied with transformer partial assembly.

Pilot Lights (Sub-Assembled)

Transformer*	+	Lamp	+	Anti-Rotation Ring	+	Operator	+	Lens	=	Complete Part

* Not applicable to full voltage units.

Part Numbers: Operators

Style		Type	Plastic Bezel	Metal Bezel
Round Flush (HW1P-10 shown)	Full Voltage	Standard	HW1P-1FQ0	HW4P-1FQ0
		Spring Up Terminals	HW1P-1Q0	HW4P-1Q0
	Transformer	Standard	HW1P-10	HW4P-10
		Spring Up Terminals	HW1P-100	–
Dome (HW1P-20 shown)	Full Voltage	Standard	HW1P-2FQ0	HW4P-2FQ0
		Spring Up Terminals	HW1P-2Q0	HW4P-2Q0
	Transformer	Standard	HW1P-20	HW4P-20
		Spring Up Terminals	HW1P-200	–
Square Flush (HW2P-10 shown)	Full Voltage	Standard	HW2P-1FQ0	–
		Spring Up Terminals	HW2P-1Q0	
	Transformer	Standard	HW2P-10	–
		Spring Up Terminals	HW2P-100	–

1. Transformer type requires separate transformer & lamp. Must select correct transformer bases on standard or spring up terminal type. Use 6V lamps or LEDs.
2. Full voltage type only requires lamp.

Part Numbers: Lenses

Style		Part Number
Round/Flush		HW1A-P1-②
Dome		HW1A-P2-②
Square/ Flush		HW2A-P1-②

In place of ②, specify the Lens Color Code.

Part Numbers: Transformer Units

Style	Voltage	Part Number
LED/Incandescent (6V secondary voltage)	120V AC	HW-FH20 HW-MH20 (with spring up terminals)*
	240V AC	HW-FM40 HW-MM40 (with spring up terminals)*
	480V AC	HW-FT80 HW-RT80 (with spring up terminals)*
	110V DC**	HW-RD0 (with spring up terminals)*

*1. *To use spring up terminal type, must use transformer type operator designed for spring up transformer.*
*2. ** DC-DC converter voltage input from 90-140V DC.*

Part Numbers: Lamps

Type	Voltage	Part Number
LED	6V AC/DC	LSTD-6②
	12V AC/DC	LSTD-1②
	24V AC/DC	LSTD-2②
	120V AC	LSTD-H2②
	240V AC	LSTD-M4②
Incandescent	6.3V AC/DC	IS-6
	12V AC/DC	IS-12
	24V AC/DC	IS-24

1. In place of ②, specify the LED Color Code.
2. The LED contains a current-limiting resistor and reverse polarity protection diodes.

② Lens/LED Color Code

Color	Code
Amber	A
Green	G
Red	R
Blue	S
White	W
Yellow	Y

Part Numbers: Anti-Rotation Ring

Appearance	Part Number
	HW9Z-RL

Use with notched panel cutout to prevent unit rotation.

Jumbo Dome Pilot Light Replacement Parts

Description	Item		Part Number
Replacement Jumbo Dome Operator		LED Type	HW1P-5Q0
		Incandesccent Type*	HW1P-5Q7
Replacement Jumbo Dome Lens		Polycarbonate Lens	HW1A-P5① ① = (A, G, R, S, W, Y)
Replacement LED Diffusing Lens			HW9Z-PP5C
Replacement LED Lamps for HW Jumbo Dome		LED Lamp	LSTDB-2① ① = (A, G, R, S, W, Y)

**Operator comes with incandescent bulb.*

Illuminated Pushbuttons (Assembled)

Part Numbers: Illuminated Pushbuttons

Style	Description		Contacts	Plastic Bezel		Metal Bezel	
				Momentary	Maintained	Momentary	Maintained
Flush	Full Voltage		1NO 1NC 1NO-1NC 2NO	HW1L-M1F10Q④-②-③ HW1L-M1F01Q④-②-③ HW1L-M1F11Q④-②-③ HW1L-M1F20Q④-②-③	HW1L-A1F10Q④-②-③ HW1L-A1F01Q④-②-③ HW1L-A1F11Q④-②-③ HW1L-A1F20Q④-②-③	HW4L-M1F10Q④-②-③ HW4L-M1F01Q④-②-③ HW4L-M1F11Q④-②-③ HW4L-M1F20Q④-②-③	HW4L-A1F10Q④-②-③ HW4L-A1F01Q④-②-③ HW4L-A1F11Q④-②-③ HW4L-A1F20Q④-②-③
	Transformer	120V AC 120V AC 240V AC 240V AC	1NO-1NC 2NO 1NO-1NC 2NO	HW1L-M1F11H2④-② HW1L-M1F20H2④-② HW1L-M1F11M4④-② HW1L-M1F20M4④-②	HW1L-A1F11H2④-② HW1L-A1F20H2④-② HW1L-A1F11M4④-② HW1L-A1F20M4④-②	HW4L-M1F11H2④-② HW4L-M1F20H2④-② HW4L-M1F11M4④-② HW4L-M1F20M4④-②	HW4L-A1F11H2④-② HW4L-A1F20H2④-② HW4L-A1F11M4④-② HW4L-A1F20M4④-②
Extended	Full Voltage		1NO 1NC 1NO-1NC 2NO	HW1L-M2F10Q④-②-③ HW1L-M2F01Q④-②-③ HW1L-M2F11Q④-②-③ HW1L-M2F20Q④-②-③	HW1L-A2F10Q④-②-③ HW1L-A2F01Q④-②-③ HW1L-A2F11Q④-②-③ HW1L-A2F20Q④-②-③	HW4L-M2F10Q④-②-③ HW4L-M2F01Q④-②-③ HW4L-M2F11Q④-②-③ HW4L-M2F20Q④-②-③	HW4L-A2F10Q④-②-③ HW4L-A2F01Q④-②-③ HW4L-A2F11Q④-②-③ HW4L-A2F20Q④-②-③
	Transformer	120V AC 120V AC 240V AC 240V AC	1NO-1NC 2NO 1NO-1NC 2NO	HW1L-M2F11H2④-② HW1L-M2F20H2④-② HW1L-M2F11M4④-② HW1L-M2F20M4④-②	HW1L-A2F11H2④-② HW1L-A2F20H2④-② HW1L-A2F11M4④-② HW1L-A2F20M4④-②	HW4L-M2F11H2④-② HW4L-M2F20H2④-② HW4L-M2F11M4④-② HW4L-M2F20M4④-②	HW4L-A2F11H2④-② HW4L-A2F20H2④-② HW4L-A2F11M4④-② HW4L-A2F20M4④-②
Extended with Full Shroud	Full Voltage		1NO 1NC 1NO-1NC 2NO	HW1L-MF2F10Q④-②-③ HW1L-MF2F01Q④-②-③ HW1L-MF2F11Q④-②-③ HW1L-MF2F20Q④-②-③	HW1L-AF2F10Q④-①-③ HW1L-AF2F01Q④-①-③ HW1L-AF2F11Q④-①-③ HW1L-AF2F20Q④-①-③	HW4L-MF2F10Q④-②-③ HW4L-MF2F01Q④-②-③ HW4L-MF2F11Q④-②-③ HW4L-MF2F20Q④-②-③	HW4L-AF2F10Q④-①-③ HW4L-AF2F01Q④-①-③ HW4L-AF2F11Q④-①-③ HW4L-AF2F20Q④-①-③
	Transformer	120V AC 120V AC 240V AC 240V AC	1NO-1NC 2NO 1NO-1NC 2NO	HW1L-MF2F11H2④-② HW1L-MF2F20H2④-② HW1L-MF2F11M4④-② HW1L-MF2F20M4④-②	HW1L-AF2F11H2④-② HW1L-AF2F20H2④-② HW1L-AF2F11M4④-② HW1L-AF2F20M4④-②	HW4L-MF2F11H2④-② HW4L-MF2F20H2④-② HW4L-MF2F11M4④-② HW4L-MF2F20M4④-②	HW4L-AF2F11H2④-② HW4L-AF2F20H2④-② HW4L-AF2F11M4④-② HW4L-AF2F20M4④-②
40mm Mushroom Head	Full Voltage		1NO 1NC 1NO-1NC 2NO	HW1L-M4F10Q④-②-③ HW1L-M4F01Q④-②-③ HW1L-M4F11Q④-②-③ HW1L-M4F20Q④-②-③	HW1L-A4F10Q④-②-③ HW1L-A4F01Q④-②-③ HW1L-A4F11Q④-②-③ HW1L-A4F20Q④-②-③	HW4L-M4F10Q④-②-③ HW4L-M4F01Q④-②-③ HW4L-M4F11Q④-②-③ HW4L-M4F20Q④-②-③	HW4L-A4F10Q④-②-③ HW4L-A4F01Q④-②-③ HW4L-A4F11Q④-②-③ HW4L-A4F20Q④-②-③
	Transformer	120V AC 120V AC 240V AC 240V AC	1NO-1NC 2NO 1NO-1NC 2NO	HW1L-M4F11H2④-② HW1L-M4F20H2④-② HW1L-M4F11M4④-② HW1L-M4F20M4④-②	HW1L-A4F11H2④-② HW1L-A4F20H2④-② HW1L-A4F11M4④-② HW1L-A4F20M4④-②	HW4L-M4F11H2④-② HW4L-M4F20H2④-② HW4L-M4F11M4④-② HW4L-M4F20M4④-②	HW4L-A4F11H2④-② HW4L-A4F20H2④-② HW4L-A4F11M4④-② HW4L-A4F20M4④-②
Square Flush	Full Voltage		1NO 1NC 1NO-1NC 2NO	HW2L-M1F10Q④-②-③ HW2L-M1F01Q④-②-③ HW2L-M1F11Q④-②-③ HW2L-M1F20Q④-②-③	HW2L-A1F10Q④-②-③ HW2L-A1F01Q④-②-③ HW2L-A1F11Q④-②-③ HW2L-A1F20Q④-②-③	–	–
	Transformer	120V AC 120V AC 240V AC 240V AC	1NO-1NC 2NO 1NO-1NC 2NO	HW2L-M1F11H2④-② HW2L-M1F20H2④-② HW2L-M1F11M4④-② HW2L-M1F20M4④-②	HW2L-A1F11H2④-② HW2L-A1F20H2④-② HW2L-A1F11M4④-② HW2L-A1F20M4④-②	–	–

1. In place of ② specify the Lens Color Code, in place of ③ specify the Full Voltage Code and in place of ④ specify Lamp Type Code.
2. For partial and sub-assembly part numbers, see pages A3-65 and A3-66.
3. For nameplates and accessories, see page A3-96.
4. For dimensions, see page A3-100.

④ Lamp Type Code

Lamp	Code
Incandescent	Blank
LED	D

② Lens Color Code

Color	Code
Amber	A
Green	G
Red	R
Blue	S
White	W
Yellow	Y*

**40mm mushroom lenses not available in yellow*

③ Full Voltage Codes

Voltage	Code
6V AC/DC	6V
12V AC/DC	12V
24V AC/DC	24V
120V AC (LED only)	120V
240VAC (LED only)	240V

Illuminated Pushbuttons (Partial-Assemblies)

Contact Assembly	+	Lamp*	+	Operator/Lens	=	Complete Switch

*Lamp is included in contact assembly for transformer models only.

Part Numbers: Operators/Lens

Type		Plastic Bezel	Metal Bezel
Flush	Momentary	HW1L-M1-②	HW4L-M1-②
	Maintained	HW1L-A1-②	HW4L-A1-②
Extended	Momentary	HW1L-M2-②	HW4L-M2-②
	Maintained	HW1L-A2-②	HW4L-A2-②
Extended/Full shroud	Momentary	HW1L-MF2-②	HW4L-MF2-②
	Maintained	HW1L-AF2-②	HW4L-AF2-②
Mushroom*	Momentary	HW1L-M4-②*	HW4L-M4-②*
	Maintained	HW1L-A4-②*	HW4L-A4-②*
Square	Momentary	HW2L-M1-②	–
	Maintained	HW2L-A1-②	

1. In place of ②, specify the Lens Color Code.
*2. *Mushroom Lens not available in yellow.*

Part Numbers: Full Voltage Contact Assemblies
(order lamp separately)

Style	Contacts	Part Number
	1NO 2NO 1NO/1NC 1NC 2NC	HW-FL10Q0 HW-FL20Q0 HW-FL11Q0 HW-FL01Q0 HW-FL02Q0

Order lamp separately.

Part Numbers: Transformer Contact Assemblies
(lamp included)

Style		Contacts	Part Number
	120V AC with LED	1NO 2NO 1NC 1NO/1NC	HW-FL10H2-② HW-FL20H2-② HW-FL01H2-② HW-FL11H2-②
	240V AC with LED	1NO 2NO 1NC 1NO/1NC	HW-FL10M4-② HW-FL20M4-② HW-FL01M4-② HW-FL11M4-②
	480V AC with LED	1NO 2NO 1NC 1NO/1NC	HW-FL10T8-② HW-FL20T8-② HW-FL01T8-② HW-FL11T8-②
	120V AC with Incandescent	1NO 2NO 1NC 1NO/1NC	HW-FL10H2 HW-FL20H2 HW-FL01H2 HW-FL11H2
	240V AC with Incandescent	1NO 2NO 1NC 1NO/1NC	HW-FL10M4 HW-FL20M4 HW-FL01M4 HW-FL11M4

Part Numbers: Lamps

Type	Voltage	Part Number
LED	6V AC/DC	LSTD-6②
	12V AC/DC	LSTD-1②
	24V AC/DC	LSTD-2②
	120V AC	LSTD-H2②
	240V AC	LSTD-M4②
Incandescent	6.3V AC/DC	IS-6
	12V AC/DC	IS-12
	24V AC/DC	IS-24
	30V AC/DC	IS-30

1. In place of ②, specify the LED Color Code from table below.
2. The LED contains a current-limiting resistor and reverse polarity protection diodes.

② Lens/LED Color Code

Color	Code
Amber	A
Green	G
Red	R
Blue	S
White	W
Yellow	Y

Illuminated Pushbuttons (Sub-Assembled)

Part Numbers: LED and Incandescent Illuminated Pushbuttons

Transformer * + Contact Blocks + Lead Holder + Adaptor † + Lamp + Anti-Rotation Ring + Operator + Lens = Complete Part

*1. * Transformer not needed with full voltage types.*
2. † Adaptor includes safety lever lock.

Part Numbers: Lenses

Style	Part Number
Round Flush	HW1A-L1-②
Round Extended	HW1A-L2-②
Ø 40mm Mushroom Cap	ALW4BLU-②*
Square Flush	HW2A-L1-②

I. n place of ②, specify the Lens Color Code.
*2. *not available in yellow.*

Part Numbers: Operators

Style		Part Number	
		Plastic Bezel	Metal Bezel
Round Flush/Extended	Momentary	HW1L-M0	HW4L-M0
	Maintained	HW1L-A0	HW4L-A0
Extended with Full Shroud	Momentary	HW1L-MF0	HW4L-MF0
	Maintained	HW1L-AF0	HW4L-AF0
Ø 40mm Mushroom Head	Momentary	HW1L-M0L	HW4L-M0L
	Maintained	HW1L-A0L	HW4L-A0L
Square Flush	Momentary	HW2L-M0	–
	Maintained	HW2L-A0	

② Lens/LED Color Code

Color	Code
Amber	A
Green	G
Red	R
Blue	S
White	W
Yellow	Y*

**ALW4BLU not available in yellow.*

Illuminated Pushbuttons (Sub- Assembled) con't

Part Numbers: Anti-Rotation Ring

Appearance	Part Number
	HW9Z-RL

Use with notched panel cutout to prevent unit rotation

Part Numbers: Lamps

Type	Voltage	Part Number
LED	6V AC/DC	LSTD-6②
	12V AC/DC	LSTD-1②
	24V AC/DC	LSTD-2②
	120V AC	LSTD-H2②
	240V AC	LSTD-M4②
Incandescent	6.3V AC/DC	IS-6
	12V AC/DC	IS-12
	24V AC/DC	IS-24
	30V AC/DC	IS-30

1. *In place of ②, specify the LED Color Code from table on previous page.*
2. *The LED contains a current-limiting resistor and reverse polarity protection diodes.*

Part Numbers: Lamp Circuit Components

Style	Description	Terminals	Part Number
Lead Holder	For use with HW-CBL on all illuminated pushbutton units. One required for each deck (pair) of contacts.		HW-LH3
Dummy Block with Full Voltage Adaptor	For use with odd number of contacts.	Fingersafe	HW-DA1FB
		Exposed	HW-DA1B
		Spring Up	HW-GA1
Full Voltage Adaptor	For use with even number of contacts.	Fingersafe	TW-DA1FB
		Exposed	TW-DA1B
Transformer Unit (6V secondary voltage)	120VAC 240VAC 480VAC	Fingersafe	TW-F126B TW-F246B TW-F486B
	120V 240V 480V	Spring Up	HW-T126 HW-T246 HW-L486
	120V 240V 480V	Exposed	TW-T126B TW-T246B TW-T486B
DC-DC Converter	110VDC		HW-L16D

HW-GA1 "Dummy Block with full voltage adaptor" does not require the use of HW-LH3.

Part Numbers: Contact Blocks

Description	Part Number	
	1NO	1NC
Standard Fingersafe (IP20)	HW-F10 HW-F10R (early make)	HW-F01 HW-F01R (late break)
Spring-Up Terminal Contacts	HW-G10 HW-G10R (early make)	HW-G01 HW-G01R (late break)
Exposed Screw Terminal Contacts	HW-C10 HW-C10R (early make)	HW-C01 HW-C01R (late break)
Dummy Block	TW-DB	

1. *All assembled part numbers in catalog include standard (HW-F...) contacts.*
2. *Assembled units with spring-up terminals (HW-G...) can be ordered by removing an "F" from the part number (Ex. HW1B-M1F11-R becomes HW1B-M111-R).*
3. *Units with exposed screw terminals (HW-C...) must be ordered as sub-components.*

Part Numbers: Contact Block Mounting Adaptor
(safety lever lock included)

Style	Part Number
	HW-CBL

1. *Used to mount contact blocks to operator (first pair only). Lamp holder is built-in.*
2. *IDEC strongly recommends using the safety lever lock (included) to prevent heavy vibration or maintenance personnel from unlocking contacts.*

Selector Switches (Assembled)

Part Numbers: 2–Position Selector Switches

Contact	Mounting	Operator Position L	Operator Position R	Handle	Maintained (L–R) Part Number	Spring Return from Right (L–R) Part Number
1NO	1	0	X	Knob Lever	HW⑤S-2TF10 HW⑤S-2LF10	HW⑤S-21TF10 HW⑤S-21LF10
1NO- 1NC	1 2	0 X	X 0	Knob Lever	HW⑤S-2TF11 HW⑤S-2LF11	HW⑤S-21TF11 HW⑤S-21LF11
2NO	1 2	0 0	X X	Knob Lever	HW⑤S-2TF20 HW⑤S-2LF20	HW⑤S-21TF20 HW⑤S-21LF20

Part Numbers: 3–Position Selector Switches

Contact	Mounting	Operator Position L	Operator Position C	Operator Position R	Handle	Maintained (L–C–R) Part Number	Spring Return from Right (L–C–R) Part Number	Spring Return from Left (L–C–R) Part Number	Spring Return Two-Way (L–C–R) Part Number
1NO- 1NC	1 2	0 0	X 0	X X	Knob Lever	HW⑤S-3TF11 HW⑤S-3LF11	HW⑤S-31TF11 HW⑤S-31LF11	HW⑤S-32TF11 HW⑤S-32LF11	HW⑤S-33TF11 HW⑤S-33LF11
2NO	1 2	X 0	0 0	0 X	Knob Lever	HW⑤S-3TF20 HW⑤S-3LF20	HW⑤S-31TF20 HW⑤S-31LF20	HW⑤S-32TF20 HW⑤S-32LF20	HW⑤S-33TF20 HW⑤S-33LF20
2NO- 1NC	1 2 3	X 0 0	0 0 X	0 X 0	Knob	HW⑤S-3JTF21N1	—	—	—
2NO- 2NC	1 2 3 4	X 0 0 X	0 0 X X	0 X X 0	Knob	HW⑤S-3TF22	HW⑤S-31TF22	HW⑤S-32TF22	HW⑤S-33TF22

⑤ Bezel Type

Type	Code
Plastic	1
Metal	4

Part Numbers: 4–Position Selector Switch

Contact	Mounting	Operator Position 1	Operator Position 2	Operator Position 3	Operator Position 4	Handle	Maintained Part Number
1NO 3NC	1 2 3 4	0 0 0 0	X X 0 0	X 0 X 0	X 0 0 X	Knob Lever	HW⑤S-4TF13N6 HW⑤S-4LF13N6
2NO- 2NC	1 2 3 4	X 0 0 0	0 X 0 0	0 0 X 0	0 0 0 X	Knob Lever	HW⑤S-4TF22N3 HW⑤S-4LF22N3

Part Numbers: 5–Position Selector Switch

Contact	Mounting	Operator Position 1	Operator Position 2	Operator Position 3	Operator Position 4	Operator Position 5	Handle	Maintained Part Number
2NO- 2NC	1 2 3 4	X 0 0 0	0 X 0 0	0 0 0 0	0 0 X 0	0 0 0 X	Knob Lever	HW⑤S-5TF22N3 HW⑤S-5LF22N3

1. *In place of ⑤ enter 1 for plastic bezel or 4 for metal bezel.*
2. *Mounting refers to contact location on operator. See page A3-82.*
3. *For nameplates, see page A3-96.*
4. *Custom contact arrangements available. Contact IDEC for details.*
5. *Five position circuit cannot be made to make five independent contact closures,*

Selector Switches (Partial-Assemblies)

Contact Assembly	+	Operator	=	Complete Part

Part Numbers: Operators

Knob Operator
(plastic bezel) (metal bezel)

Lever Operator
(plastic bezel)

No. of Positions	Description	Handle	Plastic Bezel	Metal Bezel
2	Maintained	Knob	HW1S-2T	HW4S-2T
		Lever	HW1S-2L	HW4S-2L
	Spring Return from Right	Knob	HW1S-21T	HW4S-21T
		Lever	HW1S-21L	HW4S-21L
3	Maintained (standard cam)	Knob	HW1S-3T*	HW4S-3T*
		Lever	HW1S-3L	HW4S-3L
	Maintained (S cam)	Knob	HW1S-3ST*	HW4S-3ST*
	Maintained (J cam)	Knob	HW1S-3JT*	HW4S-3JT*
	Spring Return from Right	Knob	HW1S-31T	HW4S-31T
		Lever	HW1S-31L	HW4S-31L
	Spring Return from Left	Knob	HW1S-32T	HW4S-32T
		Lever	HW1S-32L	HW4S-32L
	2-Way Spring Return	Knob	HW1S-33T	HW4S-33T
		Lever	HW1S-33L	HW4S-33L
4	Maintained	Knob	HW1S-4T	HW4S-4T
		Lever	HW1S-4L	HW4S-4L
5	Maintained	Lever	HW1S-5T	HW4S-5T
		Lever	HW1S-5L	HW4S-5L

1. Knob operator includes knob.
*2. * Three position operator is available with three different cams.*
3. Operator cams are color coded (white=standard cam, red=S cam, black =J cam).
4. For details of determining which cam to use, see page A3-79.

Part Numbers: Contact Assemblies

Style	Contacts	Part Number
Standard Fingersafe Contacts	1NO	HW-CBF10
	1NC	HW-CBF01
	1NO/1NC	HW-CBF11
	2NO	HW-CBF20
	2NC	HW-CBF02
	2NO/2NC	HW-CBF22
Spring Up Terminal Contacts	1NO	HW-CB10
	1NC	HW-CB01
	1NO/1NC	HW-CB11
	2NO	HW-CB20
	2NC	HW-CB02
	2NO/2NC	HW-CB22

Selector Switches (Sub-Assembled)

Contact Blocks	+	Adaptor and Safety Lever Lock	+	Anti-Rotation Ring	+	Operator	=	Complete Part

Part Numbers: Operators

Style	# of Positions	Description	Handle	Plastic Bezel	Metal Bezel
Knob Operator Lever Operator	2	Maintained	Knob	HW1S-2T	HW4S-2T
			Lever	HW1S-2	HW4S-2
		Spring Return from Right	Knob	HW1S-21T	HW4S-21T
			Lever	HW1S-21	HW4S-21
	3	Maintained (standard cam)	Knob	HW1S-3T*	HW4S-3T*
			Lever	HW1S-3*	HW4S-3*
		Maintained (S cam)	Knob	HW1S-3ST*	HW4S-3ST*
		Maintained (J cam)	Knob	HW1S-3JT*	HW4S-3JT*
		Spring Return from Right (standard cam)	Knob	HW1S-31T	HW4S-31T
			Lever	HW1S-31	HW4S-31
		Spring Return from Left (standard cam)	Knob	HW1S-32T	HW4S-32T
			Lever	HW1S-32	HW4S-32
		2-Way Spring Return (standard cam)	Knob	HW1S-33T	HW4S-33T
			Lever	HW1S-33	HW4S-33
	4	Maintained	Knob	HW1S-4T	HW4S-4T
			Lever	HW1S-4	HW4S-4
	5	Maintained	Knob	HW1S-5T	HW4S-5T
			Lever	HW1S-5	HW4S-5

1. *Knob operator comes with handle.*
2. ** Three position operator is available with three different cams.*
3. *Operator cams are color coded (white=standard cam, red=S cam, black =J cam).*
4. *For details of determining which cam to use, see page A3-79.*
5. *To order colored handle type, knob/lever and inserts must be ordered separately, along with lever operator. See part numbers below.*

Part Numbers: Levers and Inserts

Style	Part Number
Knob	ASWHHY-①
Lever	ASWHHL-①
Lever Color Insert	TW-HC1-①

① Handle/Insert Color Code

Color	Code	Color	Code
Black*	B	Red	R
Blue	S	Yellow	Y
Green	G	White†	W

* Lever color inserts not available in black.
† Knob and lever not available in white.

Part Numbers: Anti-Rotation Ring

Appearance	Part Number
	HW9Z-RL

1. *Use with notched panel cutout to prevent unit rotation.*
2. *Not required when using HW series nameplates. See page A3-96.*

Part Numbers: Contact Block Mounting Adaptor (safety lever lock included)

Appearance	Part Number
	HW-CB2C

1. *Used to mount contact blocks to operator (first pair only).*
2. *IDEC strongly recommends using the safety lever lock (included) to prevent heavy vibration or maintenance personnel from unlocking contacts.*

Part Numbers: Contact Blocks

Description	Part Number	
	1NO	1NC
Standard Fingersafe (IP20)	HW-F10 HW-F10R (early make)	HW-F01 HW-F01R (late break)
Spring-Up Terminal Contacts	HW-G10 HW-G10R (early make)	HW-G01 HW-G01R (late break)
Exposed Screw Terminal Contacts	HW-C10 HW-C10R (early make)	HW-C01 HW-C01R (late break)
Dummy Block	TW-DB	

1. *All assembled part numbers in catalog include standard (HW-F...) contacts.*
2. *Assembled units with spring-up terminals (HW-G...) can be ordered by removing an "F" from the part number (Ex. HW1B-M1F11-R becomes HW1B-M111-R).*
3. *Units with exposed screw terminals (HW-C...) must be ordered as sub-components.*

Key Switches (Assembled)

Part Numbers: 2–Position Key Switches

Contact	Mounting	Operator Position L	Operator Position R	Part Number: Maintained	Part Number: Spring Return from Right
1NO	1	O	X	HW⑤K-2AF10	HW⑤K-21BF10
1NO-1NC	1	O	X	HW⑤K-2AF11	HW⑤K-21BF11
	2	X	O		
2NO	1	O	X	HW⑤K-2AF20	HW⑤K-21BF20
	2	O	X		

Key Removable Option Codes

Code	Description
A	Key retained in NO position (removable in all positions)
B	Key retained in right position only
C	Key retained in left position only
D	Key retained in left and right (3 position only)
E	Key retained in center only (3 position only)
G	Key retained right and center (3 position only)
H	Key retained left and center (3 position only)

For more information on these options, contact your IDEC representative.

Part Numbers: 3–Position Key Switches

Contact	Mounting	Operator Position L	Operator Position C	Operator Position R	Part Number: Maintained	Part Number: Spring Return from Right	Part Number: Spring Return from Left	Part Number: Spring Return from Left & Right
1NO-1NC	1	O	X	X	HW⑤K-3AF11	HW⑤K-31BF11	HW⑤K-32CF11	HW⑤K-33DF11
	2	O	O	X				
2NO	1	X	O	O	HW⑤K-3AF20	HW⑤K-31BF20	HW⑤K-32CF20	HW⑤K-33DF20
	2	O	O	X				
2NO-2NC	1	X	O	O	HW⑤K-3AF22	HW⑤K-31BF22	HW⑤K-32CF22	HW⑤K-33DF22
	2	O	O	X				
	3	O	X	X				
	4	X	X	O				

⑤ Bezel Type

Type	Code
Plastic	1
Metal	4

1. *In place of ⑤ enter 1 for plastic bezel or 4 for metal bezel (see table at right).*
2. *Key is removable in all maintained positions. Other key removable options available.*
3. *Two keys are supplied with all switches.*
4. *All standard operators are keyed alike (contact IDEC for special keys).*
5. *For nameplates, see page A3-96.*
6. *Custom contact arrangements available, contact IDEC for details.*
7. *Mounting refers to contact location on operator. See page A3-82.*

Key Switches (Partial-Assemblies)

Contact Assembly	+	Operator	=	Complete Part

Part Numbers: Operators

# of Positions	Description	Plastic Bezel	Metal Bezel
2	Maintained	HW1K-2A	HW4K-2A
	Maintained, key remove left only	HW1K-2B	HW4K-2B
	Spring from Right	HW1K-21B	HW4K-21B
3	Maintained, Standard Cam	HW1K-3A	HW4K-3A
	Maintained, Cam S	HW1K-3SA	HW4K-3SA
	Maintained, Cam J	HW1K-3JA	HW4K-3JA
	Spring Return from Right	HW1K-31B	HW4K-31B
	Spring Return from Left	HW1K-32C	HW4K-32C
	Two-Way Spring Return	HW1K-33D	HW4K-33D

1. Operator includes two keys.
2. All standard operators are keyed alike (contact IDEC for special keys).
3. Other key removable options available. See "Other Key Removable Option Codes" on next page.

Part Numbers: Contact Assemblies

Style	Contacts	Part Number
Standard Fingersafe Contacts	1NO 1NC 1NO/1NC 2NO 2NC 2NO/2NC	HW-CBF10 HW-CBF01 HW-CBF11 HW-CBF20 HW-CBF02 HW-CBF22
Spring Up Terminal Contacts	1NO 1NC 1NO/1NC 2NO 2NC 2NO/2NC	HW-CB10 HW-CB01 HW-CB11 HW-CB20 HW-CB02 HW-CB22

Key Removable Option Codes

Code	Description
A	Key retained in NO position (removable in all positions)
B	Key retained in right position only
C	Key retained in left position only
D	Key retained in left and right (3 position only)
E	Key retained in center only (3 position only)
G	Key retained right and center (3 position only)
H	Key retained left and center (3 position only)

1. For more information on these options, contact your IDEC representative.
2. Key retained in all spring-return positions.

Key Switches (Sub-Assembled)

Contact Blocks	+	Adaptor & Safety Lever Lock	+	Anti-Rotation Ring	+	Operator	=	Complete Part

Part Numbers: Operators

# of Positions	Description	Plastic Bezel	Metal Bezel
2	Maintained	HW1K-2A	HW4K-2A
	Maintained, key remove left only	HW1K-2B	HW4K-2B
	Spring from Right	HW1K-21B	HW4K-21B
3	Maintained, Standard Cam	HW1K-3A	HW4K-3A
	Maintained, Cam S	HW1K-3SA	HW4K-3SA
	Maintained, Cam J	HW1K-3JA	HW4K-3JA
	Spring Return from Right	HW1K-31B	HW4K-31B
	Spring Return from Left	HW1K-32C	HW4K-32C
	Two-Way Spring Return	HW1K-33D	HW4K-33D

1. Operator includes two keys.
2. All standard operators are keyed alike (contact IDEC for special keys).
3. Other key removable options available. See table below.

Part Numbers: Contact Block Mounting Adaptor
(safety lever lock included)

Style	Part Number
	HW-CB2C

1. Used to mount contact blocks to operator (first pair only).
2. IDEC strongly recommends using the safety lever lock (included) to prevent heavy vibration or maintenance personnel from unlocking contacts.

Key Removable Option Codes

Code	Description
A	Key retained in NO position (removable in all positions)
B	Key retained in right position only
C	Key retained in left position only
D	Key retained in left and right (3 position only)
E	Key retained in center only (3 position only)
G	Key retained right and center (3 position only)
H	Key retained left and center (3 position only)

For more information on these options, contact your IDEC representative.

Part Numbers: Contact Blocks

Description	Part Number	
	1NO	1NC
Standard Fingersafe (IP20)	HW-F10 HW-F10R (early make)	HW-F01 HW-F01R (late break)
Spring-Up Terminal Contacts	HW-G10 HW-G10R (early make)	HW-G01 HW-G01R (late break)
Exposed Screw Terminal Contacts	HW-C10 HW-C10R (early make)	HW-C01 HW-C01R (late break)
Dummy Block	TW-DB	

1. All assembled part numbers in catalog include standard (HW-F...) contacts.
2. Assembled units with spring-up terminals (HW-G...) can be ordered by removing an "F" from the part number (Ex. HW1B-M1F11-R becomes HW1B-M111-R).
3. Units with exposed screw terminals (HW-C...) must be ordered as sub-components.

Part Numbers: Anti-Rotation Ring

Appearance	Part Number
	HW9Z-RL

1. Use with notched panel cutout to prevent unit rotation (not included with assembled units).
2. Not required when using HW series nameplates See page A3-96.

Illuminated Selector Switches (Assembled)

Part Numbers: 2–Position LED/Incandescent Selector Switches

Plastic Bezel	Contact	Mounting	Operator Position L	Operator Position R	Type		Part Number Maintained (L / R)	Part Number Spring Return From Right (L / R)
	1NO-1NC	1 2	0 X	X 0	Full Voltage		HW⑤F-2F11Q④-②-③	HW⑤F-21F11Q④-②-③
					Transformer	120V 240V 480V	HW⑤F-2F11H2④-② HW⑤F-2F11M4④-② HW⑤F-2F11T8④-②	HW⑤F-21F11H2④-② HW⑤F-21F11M4④-② HW⑤F-21F11T8④-②
	2NO	1 2	0 0	X X	Full Voltage		HW⑤F-2F20Q④-②-③	HW⑤F-21F20Q④-②-③
					Transformer	120V 240V 480V	HW⑤F-2F20H2④-② HW⑤F-2F20M4④-② HW⑤F-2F20T8④-②	HW⑤F-21F20H2④-② HW⑤F-21F20M4④-② HW⑤F-21F20T8④-②
	2NO-2NC	1 2 3 4	0 X 0 X	X 0 X 0	Full Voltage		HW⑤F-2F22Q④-②-③	HW⑤F-21F22Q④-②-③
					Transformer	120V 240V 480V	HW⑤F-2F22H2④-② HW⑤F-2F22M4④-② HW⑤F-2F22T8④-②	HW⑤F-21F22H2④-② HW⑤F-21F22M4④-② HW⑤F-21F22T8④-②

1. In place of ② specify the Lens/LED color code.
2. In place of ③ specify the Full Voltage code.
3. In place of ④ specify Lamp Type code.
4. In place of ⑤ enter 1 for plastic bezel or 4 for metal bezel (see table below).
5. For nameplates, see page A3-96.
6. For partial and sub-assembly part numbers, see pages A3-76 and A3-77.
7. Mounting refers to contact location on operator. See page A3-82.

② Lens/LED Color Code

Color	Code
Amber	A
Green	G
Red	R
Blue	S
White	W
Yellow	Y

③ Full Voltage Code

Voltage	Code
6V AC/DC	6V
12V AC/DC	12V
24V AC/DC	24V
120V AC (LED only)	120 V
240V AC (LED only)	240 V

④ Lamp Type Code

Lamp	Code
Incandescent	Blank
LED	D

⑤ Bezel Type

Type	Code
Plastic	1
Metal	4

Illuminated Selector Switches (Assembled) con't

Part Numbers: 3–Position LED/Incandescent Selector Switches

		Operator Position			Type		Part Number	Part Number	Part Number	Part Number
Contact	Mounting	L	C	R			Maintained	Spring Return From Right	Spring Return From Left	Spring Return Two-Way
1NO-1NC	1 2	0 0	X 0	X X	Full Voltage		HW⑤F-3F11Q④-②-③	HW⑤F-31F11Q④-②-③	HW⑤F-32F11Q④-②-③	HW⑤F-33F11Q④-②-③
					Transformer	120V	HW⑤F-3F11H2④-②	HW⑤F-31F11H2④-②	HW⑤F-32F11H2④-②	HW⑤F-33F11H2④-②
						240V	HW⑤F-3F11M4④-②	HW⑤F-31F11M4④-②	HW⑤F-32F11M4④-②	HW⑤F-33F11M4④-②
						480V	HW⑤F-3F11T8④-②	HW⑤F-31F11T8④-②	HW⑤F-32F11T8④-②	HW⑤F-33F11T8④-②
2NO	1 2	X 0	0 0	0 X	Full Voltage		HW⑤F-3F20Q④-②-③	HW⑤F-31F20Q④-②-③	HW⑤F-32F20Q④-②-③	HW⑤F-33F20Q④-②-③
					Transformer	120V	HW⑤F-3F20H2④-②	HW⑤F-31F20H2④-②	HW⑤F-32F20H2④-②	HW⑤F-33F20H2④-②
						240V	HW⑤F-3F20M4④-②	HW⑤F-31F20M4④-②	HW⑤F-32F20M4④-②	HW⑤F-33F20M4④-②
						480V	HW⑤F-3F20T8④-②	HW⑤F-31F20T8④-②	HW⑤F-32F20T8④-②	HW⑤F-33F20T8④-②
2NC	1 2	0 X	X X	X 0	Full Voltage		HW⑤F-3F02Q④-②-③	HW⑤F-31F02Q④-②-③	HW⑤F-32F02Q④-②-③	HW⑤F-33F02Q④-②-③
					Transformer	120V	HW⑤F-3F02H2④-②	HW⑤F-31F02H2④-②	HW⑤F-32F02H2④-②	HW⑤F-33F02H2④-②
						240V	HW⑤F-3F02M4④-②	HW⑤F-31F02M4④-②	HW⑤F-32F02M4④-②	HW⑤F-33F02M4④-②
						480V	HW⑤F-3F02T8④-②	HW⑤F-31F02T8④-②	HW⑤F-32F02T8④-②	HW⑤F-33F02T8④-②
2NO-2NC	1 2 3 4	X 0 0 X	0 0 X X	0 X X 0	Full Voltage		HW⑤F-3F22Q④-②-③	HW⑤F-31F22Q④-②-③	HW⑤F-32F22Q④-②-③	HW⑤F-33F22Q④-②-③
					Transformer	120V	HW⑤F-3F22H2④-②	HW⑤F-31F22H2④-②	HW⑤F-32F22H2④-②	HW⑤F-33F22H2④-②
						240V	HW⑤F-3F22M4④-②	HW⑤F-31F22M4④-②	HW⑤F-32F22M4④-②	HW⑤F-33F22M4④-②
						480V	HW⑤F-3F22T8④-②	HW⑤F-31F22T8④-②	HW⑤F-32F22T8④-②	HW⑤F-33F22T8④-②
4NO	1 2 3 4	X 0 X 0	0 0 0 0	0 X 0 X	Full Voltage		HW⑤F-3F40Q④-②-③	HW⑤F-31F40Q④-②-③	HW⑤F-32F40Q④-②-③	HW⑤F-33F40Q④-②-③
					Transformer	120V	HW⑤F-3F40H2④-②	HW⑤F-31F40H2④-②	HW⑤F-32F40H2④-②	HW⑤F-33F40H2④-②
						240V	HW⑤F-3F40M4④-②	HW⑤F-31F40M4④-②	HW⑤F-32F40M4④-②	HW⑤F-33F40M4④-②
						480V	HW⑤F-3F40T8④-②	HW⑤F-31F40T8④-②	HW⑤F-32F40T8④-②	HW⑤F-33F40T8④-②
4NC	1 2 3 4	0 X 0 X	X X X X	X 0 X 0	Full Voltage		HW⑤F-3F04Q④-②-③	HW⑤F-31F04Q④-②-③	HW⑤F-32F04Q④-②-③	HW⑤F-33F04Q④-②-③
					Transformer	120V	HW⑤F-3F04H2④-②	HW⑤F-31F04H2④-②	HW⑤F-32F04H2④-②	HW⑤F-33F04H2④-②
						240V	HW⑤F-3F04M4④-②	HW⑤F-31F04M4④-②	HW⑤F-32F04M4④-②	HW⑤F-33F04M4④-②
						480V	HW⑤F-3F04T8④-②	HW⑤F-31F04T8④-②	HW⑤F-32F04T8④-②	HW⑤F-33F04T8④-②

1. In place of ② specify the Lens/LED color code.
2. In place of ③ specify the Full Voltage code.
3. In place of ④ specify Lamp Type code.
4. In place of ⑤ enter 1 for plastic bezel or 4 for metal bezel (see table below).
5. For nameplates, see page A3-96.
6. For partial and sub-assembly part numbers, see pages A3-76 and A3-77.
7. Mounting refers to contact location on operator. See page A3-82.

② Lens/LED Color Code

Color	Code
Amber	A
Green	G
Red	R
Blue	S
White	W
Yellow	Y

③ Full Voltage Code

Voltage	Code
6V AC/DC	6V
12V AC/DC	12V
24V AC/DC	24V
120V AC (LED only)	120 V
240V AC (LED only)	240 V

④ Lamp Type Code

Lamp	Code
Incandescent	Blank
LED	D

⑤ Bezel Type

Type	Code
Plastic	1
Metal	4

Illuminated Selector Switches (Partial-Assemblies)

Contact Assembly +	Lamp +	Operator/Lens =	Complete Part

Full Voltage Models

Part Numbers: Operators/Lens

	Type	Plastic	Metal
2 pos.	Maintained	HW1F-2②	HW4F-2②
2 pos.	Spring from Right	HW1F-21②	HW4F-21②
3 pos.	Maintained	HW1F-3②	HW4F-3②
3 pos.	Spring from Right	HW1F-31②	HW4F-31②
3 pos.	Spring from Left	HW1F-32②	HW4F-32②
3 pos.	Spring from Both	HW1F-33②	HW4F-33②

In place of ②, specify the Lens Color Code from table below.

Part Numbers: Contact Assemblies (order lamp separately)

Style	Contacts	Part Number
	1NO 2NO 1NO/1NC 1NC 2NC	HW-FL10Q0 HW-FL20Q0 HW-FL11Q0 HW-FL01Q0 HW-FL02Q0

Order lamp separately from table on right.

Part Numbers: Lamps

Type	Voltage	Part Number
LED	6V AC/DC	LSTD-6②
	12V AC/DC	LSTD-1②
	24V AC/DC	LSTD-2②
	120V AC	LSTD-H2②
	240V AC	LSTD-M4②
Incandescent	6.3V AC/DC	IS-6
	12V AC/DC	IS-12
	24V AC/DC	IS-24

1. *In place of ②, specify the LED Color Code from table below.*
2. *The LED contains a current-limiting resistor and reverse polarity protection diodes.*

Transformer Models

Part Numbers: Contact Assemblies (lamp included)

Style	Contacts	Part Number
120V AC with LED	1NO 2NO 1NC 1NO/1NC	HW-FL10H2-② HW-FL20H2-② HW-FL01H2-② HW-FL11H2-②
240V AC with LED	1NO 2NO 1NC 1NO/1NC	HW-FL10M4-② HW-FL20M4-② HW-FL01M4-② HW-FL11M4-②
480V AC with LED	1NO 2NO 1NC 1NO/1NC	HW-FL10T8-② HW-FL20T8-② HW-FL01T8-② HW-FL11T8-②
120V AC with Incandescent	1NO 2NO 1NC 1NO/1NC	HW-FL10H2 HW-FL20H2 HW-FL01H2 HW-FL11H2
240V AC with Incandescent	1NO 2NO 1NC 1NO/1NC	HW-FL10M4 HW-FL20M4 HW-FL01M4 HW-FL11M4

6V LED/Lamp included with transformer sub-assembly.

Part Numbers: Operators/Lens

	Type	Plastic	Metal
2 pos.	Maintained	HW1F-2②	HW4F-2②
2 pos.	Spring from Right	HW1F-21②	HW4F-21②
3 pos.	Maintained	HW1F-3②	HW4F-3②
3 pos.	Spring from Right	HW1F-31②	HW4F-31②
3 pos.	Spring from Left	HW1F-32②	HW4F-32②
3 pos.	Spring from Both	HW1F-33②	HW4F-33②

In place of ②, specify the Lens Color Code from table below.

② Lens/LED Color Code

Color	Code
Amber	A
Green	G
Red	R
Blue	S
White	W
Yellow	Y

Illuminated Selector Switches (Sub-Assembled)

Transformer * +	Contact Blocks +	Lead Holder +	Adaptor +	Lamp +	Anti-Rotation +	Operator +	Illuminated Knob =	Complete Part

* not applicable for full voltage units

Part Numbers: Operators

Appearance	# of Positions	Description	Plastic Bezel	Metal Bezel
	2	Maintained	HW1F-2	HW4F-2
		Spring return from right	HW1F-21	HW4F-21
	3	Maintained	HW1F-3	HW4F-3
		Spring return from right	HW1F-31	HW4F-31
		Spring return from left	HW1F-32	HW4F-32
		Two-way spring return	HW1F-33	HW4F-33

Illuminated knobs must be ordered separately.

Part Numbers: Illuminated Knob

Appearance	Description	Part Number
	Amber	HW9Z-FDY-A
	Green	HW9Z-FDY-G
	Red	HW9Z-FDY-R
	Blue	HW9Z-FDY-S
	White	HW9Z-FDY-W
	Yellow	HW9Z-FDY-Y

Part Numbers: Contact Block Mounting Adaptor
(safety lever lock included)

Style	Part Number
	HW-CBL

1. *Used to mount contact blocks to operator (first pair only). Lamp holder is built-in.*
2. *IDEC strongly recommends using the safety lever lock (included) to prevent heavy vibration or maintenance personnel from unlocking contacts.*

Part Numbers: Contact Blocks

Description	Part Number	
	1NO	1NC
Standard Fingersafe (IP20)	HW-F10 HW-F10R (early make)	HW-F01 HW-F01R (late break)
Spring-Up Terminal Contacts	HW-G10 HW-G10R (early make)	HW-G01 HW-G01R (late break)
Exposed Screw Terminal Contacts	HW-C10 HW-C10R (early make)	HW-C01 HW-C01R (late break)
Dummy Block	TW-DB	

1. *All assembled part numbers in catalog include standard (HW-F...) contacts.*
2. *Assembled units with spring-up terminals (HW-G...) can be ordered by removing an "F" from the part number (Ex. HW1B-M1F11-R becomes HW1B-M111-R).*
3. *Units with exposed screw terminals (HW-C...) must be ordered as sub-components.*

Illuminated Selector Switches (Sub- Assembled) con't

Part Numbers: Lamps

Type	Voltage	Part Number
LED	6V AC/DC	LSTD-6②
	12V AC/DC	LSTD-1②
	24V AC/DC	LSTD-2②
	120V AC	LSTD-H2②
	240V AC	LSTD-M4②
Incandescent	6.3V AC/DC	IS-6
	12V AC/DC	IS-12
	24V AC/DC	IS-24

1. In place of ②, specify the LED Color Code from table at right.
2. The LED contains a current-limiting resistor and reverse polarity protection diodes.

Part Numbers: Lamp Circuit Components

Style	Description	Terminals	Part Number
Lead Holder	For use with HW-CBL on all illuminated pushbutton units. One required for each deck (pair) of contacts.		HW-LH3
Dummy Block with Full Voltage Adaptor	For use with odd number of contacts.	Fingersafe	HW-DA1FB
		Exposed	HW-DA1B
		Spring Up	HW-GA1
Full Voltage Adaptor	For use with even number of contacts.	Fingersafe	TW-DA1FB
		Exposed	TW-DA1B

HW-GA1 "Dummy Block with full voltage adaptor" does not require the use of HW-LH3.

Part Numbers: Transformer Unit

Style	Voltage	Part Number
Fingersafe	120V AC 240V AC 480V AC	TW-F126B TW-F246B TW-F486B
Spring Up (6V secondary voltage)	120V AC 240V AC 480V AC	HW-T126 HW-T246 HW-L486
DC-DC Converter	110VDC	HW-L16D

1. DC-DC convertor features spring-up terminals.
2. Applicable voltage range 90-140V DC.

② LED Color Code

Color	Code
Amber	A
Green	G
Red	R
Blue	S
White	W
Yellow	Y

Part Numbers: Anti-Rotation Ring

Appearance	Part Number
	HW9Z-RL

1. Use with notched panel cutout to prevent unit rotation.
2. Not required when using HW series nameplates See page A3-96.

Custom Selector Switch Building Guide

To build a custom selector switch, follow these steps.

Step1: How many positions of the switch are needed?

# of positions (2, 3, 4, 5) ☐

Step 2: How many contacts should there be?

# of isolated contacts (maximum 6) ☐

Step 3: Fill in the Truth Table
(X = closed, O = open)

Knob Position

Contacts	1	2	3	4	5
1					
2					
3					
4					
5					
6					

Step 4: If building a 2, 4, or 5 position selector, skip this step. (2, 4, 5 position selectors have only one cam)

If building a 3 position selector, determine appropriate cam as follows:

Look at Row 1 from above table and locate an identical row in the operator truth tables (See next page)**.**

Repeat for all rows. Find one operator that contains all rows from above table.

Record the operator cam version.

Operator CAM Version (blank, S, J for 3 position) ☐

Step 5: Build by placing appropriate contact in appropriate mounting position for each desired row on operator cam truth table. "L" and "R" refer to mounting on left or right side of operator as viewed from the front of the panel.

Caution: Before putting any custom selector switch into use, it should be tested using an ohmmeter.

For Operator Truth Tables, see next page.

Operator Truth Tables

Use the following tables to build custom selector switches.

2 Position Selector Switches

HW1S-2T
HW1K-2*
HW1F-2

Contact	Mounting Position	Operator Position: Left	Operator Position: Right
HW-F10 (NO)	L	O	X
	R	O	X
HW-F01 (NC)	L	X	O
	R	X	O
HW-F10R NO-(EM)	L	O	X
	R	O	X
HW-F01R NC-(LB)	L	X	O
	R	X	O

1. *Mounting position indicates which side of operator each contact should be mounted (as viewed from the front of the panel).*
2. ** for key removable code (see page A3-73).*

3 Position Selector Switches

HW1S-3T
HW1K-3*
HW1F-3

Contact	Mounting Position	Operator Position: Left	Operator Position: Center	Operator Position: Right
HW-F10 (NO)	L	X	O	O
	R	O	O	X
HW-F01 (NC)	L	O	X	X
	R	X	X	O
HW-F10R NO-(EM)	L	X	O	O
	R	O	O	X
HW-F01R NC-(LB)	L	O	X	X
	R	X	X	O

1. *HW1S-3T is identified by white plungers on the operator.*
2. *Mounting position indicates which side of operator each contact should be mounted (as viewed from the front of the panel).*
3. ** for key removable code (see page A3-73).*

HW1S-3ST
HW1K-3S*

Contact	Mounting Position	Operator Position: Left	Operator Position: Center	Operator Position: Right
HW-F10 (NO)	L	X	O	O
	R	O	O	X
HW-F01 (NC)	L	O	O	X
	R	X	O	O
HW-F10R NO-(EM)	L	X	X	O
	R	O	X	X
HW-F01R NC-(LB)	L	O	X	X
	R	X	X	O

1. *HW1S-3ST is identified by red plungers on the operator.*
2. *Mounting position indicates which side of operator each contact should be mounted (as viewed from the front of the panel).*
3. ** for key removable code (see page A3-73).*

HW1S-3JT
HW1K-3J*

Contact	Mounting Position	Operator Position: Left	Operator Position: Center	Operator Position: Right
HW-F10 (NO)	L	X	O	O
	R	O	O	X
HW-F01 (NC)	L	O	X	O
	R	O	X	O
HW-F10R NO-(EM)	L	X	O	X
	R	X	O	X
HW-F01R NC-(LB)	L	O	X	X
	R	X	X	O

1. *HW1S-3JT is identified by black plungers on the operator.*
2. *Mounting position indicates which side of operator each contact should be mounted (as viewed from the front of the panel).*
3. ** for key removable code (see page A3-73).*

Operator Truth Tables con't

4 Position Selector Switches

HW1S-4T

Contact	Mounting Position	Operator Position 1	2	3	4
HW-F10 (NO)	L	X	O	O	O
	R	O	O	O	X
HW-F01 (NC)	L	O	O	X	O
	R	O	X	O	O
HW-F10R NO-(EM)	L	~~X~~	X	O	X
	R	X	O	~~X~~	X
HW-F01R NC-(LB)	L	O	~~X~~	~~X~~	X
	R	~~X~~	~~X~~	X	O

5 Position Selector Switches

HW1S-5T

Contact	Mounting Position	Operator Position 1	2	3	4	5
HW-F10 (NO)	L	X	O	O	O	O
	R	O	O	O	O	X
HW-F01 (NC)	L	O	O	O	X	O
	R	O	X	O	O	O
HW-F10R NO-(EM)	L	~~X~~	~~X~~	X	O	X
	R	X	O	~~X~~	~~X~~	X
HW-F01R NC-(LB)	L	O	~~X~~	~~X~~	~~X~~	X
	R	~~X~~	~~X~~	~~X~~	X	O

Mounting position indicates which side of operator each contact should be mounted (as viewed from the front of the panel).

Custom Selector Switch Building Examples

Example 1: 3 Position, Maintained Selector Switch with 3 Contacts

Determine which operator is capable of producing all the desired contact actions.

	Knob Position			Operator		
	Left	Center	Right	HW1S-3T	HW1S-3ST	HW1S-3JT
Contact 1	O	O	X	Possible with HW-F10 mounted on right	Possible with HW-F10 mounted on right	Possible with HW-F10 mounted on right
Contact 2	O	X	O	Not possible	Not possible	Possible with HW-F01 mounted on left or right
Contact 3	X	O	O	Possible with HW-F10 mounted on left	Possible with HW-F10 mounted on left	Possible with HW-F10 mounted on left

The only operator in this example that will produce all the desired contact actions is HW1S-3JT. Assemble as follows:

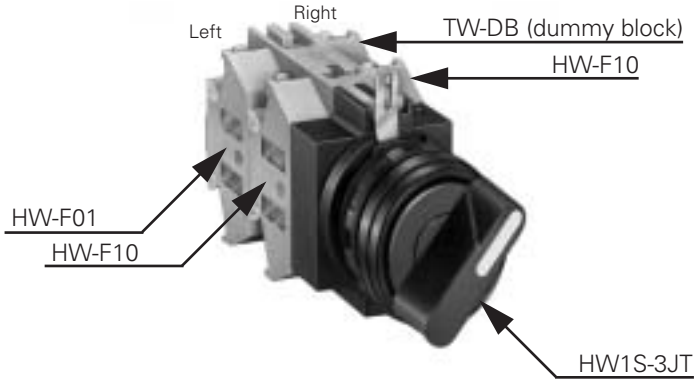

Example 2: 3 Position, Maintained Selector Switch with 2 Contacts

Determine which operator is capable of producing all the desired contact actions.

	Knob Position			Operator		
	Left	Center	Right	HW1S-3T	HW1S-3ST	HW1S-3JT
Contact 1	O	O	X	Possible with HW-F10 mounted on right	Possible with HW-F10 mounted on right	Possible with HW-F10 mounted on right
Contact 2	O	X	X	Possible with HW-F01 mounted on left	Possible with HW-F10R mounted on right or HW-F01R mounted on left	Not possible

This arrangement is possible with either the HW1S-3T or HW1S-3ST operator. It is preferred to use the HW1S-3T as this requires only the standard contacts (HW-F10 and HW-F01 and not the early make (HW-F10R) or late break (HW-F01R) contacts. Assemble as follows:

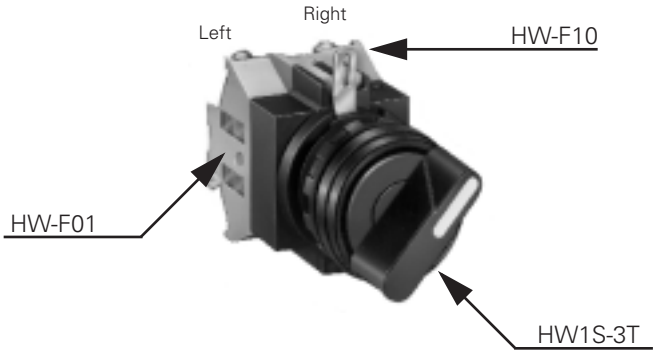

Custom Selector Switch Building Examples con't

Example 3: 4 Position Selector Switch with 4 Contacts

Determine where the contact will be mounted.

	Knob Position				Operator
	1	2	3	4	HW1S-4T
Contact 1	0	X	0	0	HW-F01 mounted on right
Contact 2	0	0	X	0	HW-F01 mounted on left
Contact 3	0	0	0	X	HW-F10 mounted on right
Contact 4	0	~~X~~	~~X~~	~~X~~	HW-F01R mounted on left

Assemble as follows:

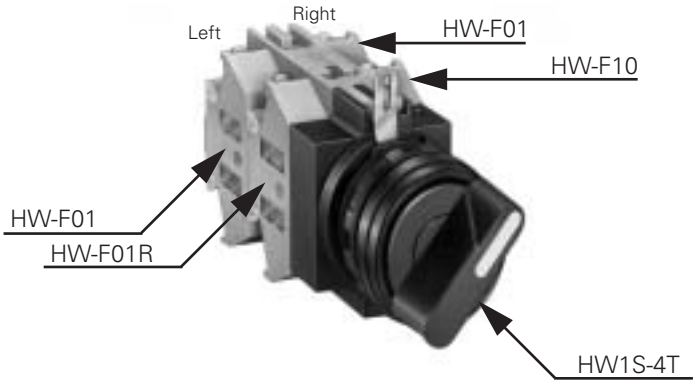

Example 4: 5 Position Selector Switch with 4 Contacts

Determine where the contact will be mounted.

	Knob Position					Operator
	1	2	3	4	5	HW1S-5T
Contact 1	0	X	0	0	0	HW-F01 mounted on right
Contact 2	0	0	0	X	0	HW-F01 mounted on left
Contact 3	0	0	0	0	X	HW-F10 mounted on right
Contact 4	X	0	~~X~~	~~X~~	~~X~~	HW-F10R mounted on right

Assembled as follows:

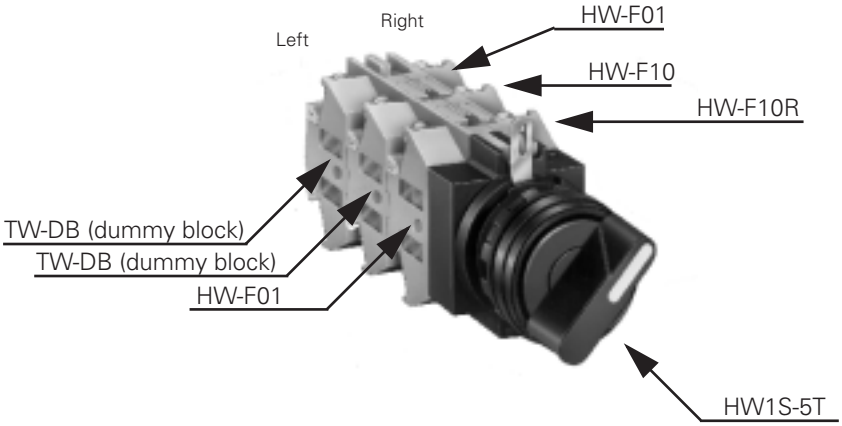

Dual Pushbutton Switches

Two pushbuttons and a pilot light are integrated into one space-saving ø22 mm control unit.

- Momentary and interlock types are available for pushbuttons. Interlock type prevents both buttons from being pressed at the same time.
- Pilot lights are available in full voltage and transformer types illuminated with LED or incandescent lamps.
- IP40 protection, IP65 when using silicon cover.
- UL Listed, CSA approved, and EN compliant

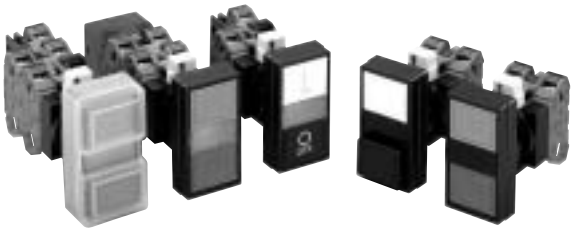

Applications:

- Ideal for use as power switches and start/stop switches (available with I/ON and O/OFF markings on the buttons and a pilot light in the center).
- Interlock type prevents two pushbuttons from being pressed at the same time.

Dual Pushbutton Switches (Assembled)

Part Numbers:

Operation Type	Button Style		Contact Arrangement		Part Number	④ Button Color Code	⑤ Legend Code
			Top Button	Bottom Button			
Momentary	Flush (top) Flush (bottom)		1NO	1NC	HW7D-B11F1001-④⑤	GR: Green (top) Red (bottom) WB: White (top) Black (bottom)	Blank:Without legend 1:I/ON (top) O/OFF (bottom)
			1NO	1NO	HW7D-B11F1010-④⑤		
			1NO-1NC	1NO-1NC	HW7D-B11F1111-④⑤		
			2NO	2NC	HW7D-B11F2002-④⑤		
			2NO	2NO	HW7D-B11F2020-④⑤		
	Flush (top) Extended (bottom)		1NO	1NC	HW7D-B12F1001-④⑤		
			1NO	1NO	HW7D-B12F1010-④⑤		
			1NO-1NC	1NO-1NC	HW7D-B12F1111-④⑤		
			2NO	2NC	HW7D-B12F2002-④⑤		
			2NO	2NO	HW7D-B12F2020-④⑤		
Interlock*	Flush (top) Flush (bottom)		1NO	1NC	HW7D-B21F1001-④⑤		
			1NO	1NO	HW7D-B21F1010-④⑤		
			1NO-1NC	1NO-1NC	HW7D-B21F1111-④⑤		
			2NO	2NC	HW7D-B21F2002-④⑤		
			2NO	2NO	HW7D-B21F2020-④⑤		
	Flush (top) Extended (bottom)		1NO	1NC	HW7D-B22F1001-④⑤		
			1NO	1NO	HW7D-B22F1010-④⑤		
			1NO-1NC	1NO-1NC	HW7D-B22F1111-④⑤		
			2NO	2NC	HW7D-B22F2002-④⑤		
			2NO	2NO	HW7D-B22F2020-④⑤		

*1. *Interlock type prevents both top and bottom buttons from being pressed simultaneously.*
2. Clear silicon rubber cover part number HW9Z-D7D.

Part Numbers, con't

Part Numbers: With Center Pilot Light

Operation Type		Button Style	Pilot Light Type	Top Button	Bottom Button	Part Number
Flush (top) Flush (bottom)	Momentary	Flush (Top) Flush (Bottom)	Full Voltage	1NO	1NC	HW7D-L11F1001②③-④⑤
				1NO	1NO	HW7D-L11F1010②③-④⑤
				1NO-1NC	1NO-1NC	HW7D-L11F1111②③-④⑤
				2NO	2NC	HW7D-L11F2002②③-④⑤
				2NO	2NO	HW7D-L11F2020②③-④⑤
			Transformer	1NO	1NC	HW7D-L11F1001②③-④⑤
				1NO	1NO	HW7D-L11F1010②③④⑤
				1NO-1NC	1NO-1NC	HW7D-L11F1111②③-④⑤
				2NO	2NC	HW7D-L11F2002②③-④⑤
				2NO	2NO	HW7D-L11F2020②③-④⑤
		Flush (Top) Extended (Bottom)	Full Voltage	1NO	1NC	HW7D-L12F1001②③-④⑤
				1NO	1NO	HW7D-L12F1010②③-④⑤
				1NO-1NC	1NO-1NC	HW7D-L12F1111②③-④⑤
				2NO	2NC	HW7D-L12F2002②③-④⑤
				2NO	2NO	HW7D-L12F2020②③-④⑤
			Transformer	1NO	1NC	HW7D-L12F1001②③-④⑤
				1NO	1NO	HW7D-L12F1010②③-④⑤
				1NO-1NC	1NO-1NC	HW7D-L12F1111②③-④⑤
				2NO	2NC	HW7D-L12F2002②③-④⑤
				2NO	2NO	HW7D-L12F2020②③-④⑤
Flush (top) Extended (bottom)	Interlock*	Flush (Top) Flush (Bottom)	Full Voltage	1NO	1NC	HW7D-L21F1001②③-④⑤
				1NO	1NO	HW7D-L21F1010②③-④⑤
				1NO-1NC	1NO-1NC	HW7D-L21F1111②③-④⑤
				2NO	2NC	HW7D-L21F2002②③-④⑤
				2NO	2NO	HW7D-L21F2020②③-④⑤
			Transformer	1NO	1NC	HW7D-L21F1001②③-④⑤
				1NO	1NO	HW7D-L21F1010②③-④⑤
				1NO-1NC	1NO-1NC	HW7D-L21F1111②③-④⑤
				2NO	2NC	HW7D-L21F2002②③-④⑤
				2NO	2NO	HW7D-L21F2020②③-④⑤
		Flush (Top) Extended (Bottom)	Full Voltage	1NO	1NC	HW7D-L22F1001②③-④⑤
				1NO	1NO	HW7D-L22F1010②③-④⑤
				1NO-1NC	1NO-1NC	HW7D-L22F1111②③-④⑤
				2NO	2NC	HW7D-L22F2002②③-④⑤
				2NO	2NO	HW7D-L22F2020②③-④⑤
			Transformer	1NO	1NC	HW7D-L22F1001②③-④⑤
				1NO	1NO	HW7D-L22F1010②③-④⑤
				1NO-1NC	1NO-1NC	HW7D-L22F1111②③-④⑤
				2NO	2NC	HW7D-L22F2002②③-④⑤
				2NO	2NO	HW7D-L22F2020②③-④⑤

*1. *Interlock type prevents both top and bottom buttons from being pressed simultaneously.*
2. Clear silicon rubber cover part number HW9Z-D7D.

②Pilot Light Illumination Type and Voltage Code

Full Voltage	
Voltage	**Code**
6V AC/DC, LED	Q2
12V AC/DC, LED	Q3
24V AC/DC, LED	Q4
120V AC, LED	Q8
6V AC/DC, Incandescent	Q5*
12V AC/DC, Incandescent	Q6*
24V AC/DC, Incandescent	Q7*
Step-Down Transformer (6V Secondary Lamp Voltage)	
Voltage	**Code**
120V AC, LED	H22
240V AC, LED	M42
480V AC, LED	T82
120V AC, Incandescent	H25*
240V AC, Incandescent	M45*
480V AC, Incandescent	T85*

** Only available for White Lens Pilot Lamp.*

③Pilot Lamp Color Code

Color	Code
Amber	A*
Green	G*
Red	R*
Blue	S*
White	W
Yellow	Y*

** Only available for LED Type illumination.*

④Pushbutton Color Code

Color		Code
Top	Green	GR
Bottom	Red	
Top	White	WB
Bottom	Black	

⑤Engraving Codes

Engraving		Code
No Engraving		Blank
I/ON	Top	1
O/OFF	Bottom	

Contact Arrangement Chart

Contact Arrangement			Contact Block		Top Button		Bottom Button	
Top Button	Bottom Button	Contact Code	Mounting Position	Type	Normal	Push	Normal	Push
1NO	1NO	1010	1	NO		X		
			2	NO				X
1NO	1NC	1001	1	NO		X		
			2	NC			X	
1NC	1NO	0110	1	NC	X			
			2	NO				X
1NC	1NC	0101	1	NC	X			
			2	NC			X	
1NO	2NO	1020	1	NO		X		
			2	NO				X
			3	Dummy				
			4	NO				X
1NO	1NO-1NC	1011	1	NO		X		
			2	NO				X
			3	Dummy				
			4	NC			X	
1NO	2NC	1002	1	NO		X		
			2	NC			X	
			3	Dummy				
			4	NC			X	
1NC	2NO	0120	1	NC	X			
			2	NO				X
			3	Dummy				
			4	NO				X
1NC	1NO-1NC	0111	1	NC	X			
			2	NO				X
			3	Dummy				
			4	NC			X	
1NC	2NC	0102	1	NC	X			
			2	NC			X	
			3	Dummy				
			4	NC			X	
2NO	1NO	2010	1	NO		X		
			2	NO				X
			3	NO		X		
			4	Dummy				
2NO	1NC	2001	1	NO		X		
			2	NC			X	
			3	NO		X		
			4	Dummy				
1NO-1NC	1NO	1110	1	NO		X		
			2	NO				X
			3	NC	X			
			4	Dummy				
1NO-1NC	1NC	1101	1	NO		X		
			2	NO			X	
			3	NC	X			
			4	Dummy				
2NC	1NO	0210	1	NC	X			
			2	NO				X
			3	NC	X			
			4	Dummy				

1. Transformers can have two or four contact blocks only.
2. Contact blocks 1 and 3 are actuated by the top button. Contact blocks 2 and 4 are actuated by the bottom button.

Contact Arrangement Chart con't

Contact Arrangement			Contact Block		Top Button		Bottom Button	
Top Button	Bottom Button	Contact Code	Mounting Position	Type	Normal	Push	Normal	Push
2NC	1NC	0201	1	NC	X			
			2	NC			X	
			3	NC	X			
			4	Dummy				
2NO	2NO	2020	1	NO		X		
			2	NO				X
			3	NO		X		
			4	NO				X
2NO	1NO-1NC	2011	1	NO		X		
			2	NO				X
			3	NO		X		
			4	NC			X	
2NO	2NC	2002	1	NO		X		
			2	NC			X	
			3	NO		X		
			4	NC			X	
1NO-1NC	2NO	1120	1	NO		X		
			2	NO				X
			3	NC	X			
			4	NO				X
1NO-1NC	1NO-1NC	1111	1	NO		X		
			2	NO				X
			3	NC	X			
			4	NC			X	
1NO-1NC	2NC	1102	1	NO		X		
			2	NC			X	
			3	NC	X			
			4	NC			X	
2NC	2NO	0220	1	NC	X			
			2	NO				X
			3	NC	X			
			4	NO				X
2NC	1NO-1NC	0211	1	NC	X			
			2	NO				X
			3	NC	X			
			4	NC			X	
2NC	2NC	0202	1	NC	X			
			2	NC			X	
			3	NC	X			
			4	NC			X	

Contact Block Mounting Position Example

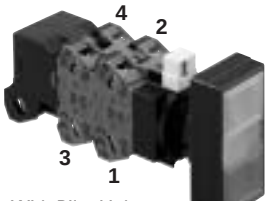

With Pilot Light
(transformer type)

Dual Pushbutton Switches (Sub-Assembled)

Contact Blocks	+	Mounting Adaptor	+	Operator	+	Lens	=	Complete Part

Part Numbers: Operators

Style		Type	Button Style	Part Number
Flush Flush		Momentary	Flush (top) Flush (bottom)	HW7D-011④-⑤
			Flush (top) Extended (bottom)	HW7D-012④-⑤
Flush Extended		Interlock	Flush (top) Flush (bottom)	HW7D-021④-⑤
			Flush (top) Extended (bottom)	HW7D-022④-⑤

④Pushbutton Color Code

Color		Code
Top	Green	GR
Bottom	Red	
Top	White	WB
Bottom	Black	

⑤Engraving Codes

Engraving		Code
No Engraving		Blank
I/ON	Top	1
O/OFF	Bottom	

Part Numbers: Contact Block Mounting Adaptor
(safety lever lock included)

Appearance	Part Number
Non-Illuminated	HW-CB2C
Illuminated (with Pilot Light)	HW-CBL

1. Used to mount contact blocks to operator (first pair only).
2. IDEC strongly recommends using the safety lever lock (included) to prevent heavy vibration or maintenance personnel from unlocking contacts.

Part Numbers: Lamps/Lens

	Type		Voltage	Part Number
Lamps	LED		6V AC/DC	LSTD-6②
			12V AC/DC	LSTD-1②
			24V AC/DC	LSTD-2②
			120V AC	LSTD-H2②
			240V AC	LSTD-M4②
	Incandescent		6.3V AC/DC	IS-6
			12V AC/DC	IS-12
			24V AC/DC	IS-24
			30V AC/DC	IS-30
Lens	Non-Illuminated			HW9Z-B7B
	Illuminated			HW9Z-L7W

1. In place of ②, specify the LED Color Code from table on right.
2. The LED contains a current-limiting resistor and reverse polarity protection diodes.

Part Numbers: Contact Blocks

Description	Part Number	
	1NO	1NC
Standard Fingersafe (IP20)	HW-F10 HW-F10R (early make)	HW-F01 HW-F01R (late break)
Spring-Up Terminal Contacts	HW-G10 HW-G10R (early make) HW-G10-MAU (gold contacts)	HW-G01 HW-G01R (late break) HW-G01-MAU (gold contacts)
Exposed Screw Terminal Contacts	HW-C10 HW-C10R (early make)	HW-C01 HW-C01R (late break)
Dummy Block	TW-DB	

1. All assembled part numbers in catalog include standard (HW-F...) contacts. (excep unibody)
2. Assembled units with spring-up terminals (HW-G...) can be ordered by removing an "F" from the part number (Ex. HW1B-M1F11-R becomes HW1B-M111-R).
3. Units with exposed screw terminals (HW-C...) must be ordered as sub-component
4. All contacts (including exposed screw) are UL, CSA, and IEC compliant and carr the CE mark.

Part Numbers: Lamp Circuit Components

Style		Description	Terminals	Part Number
Lead Holder		For use with HW-CBL on all illuminated pushbutton units. One required for each deck (pair) of contacts.		HW-LH3
Dummy Block with Full Voltage Adaptor		For use with odd number of contacts.	Fingersafe	HW-DA1FB
			Exposed	HW-DA1B
			Spring Up	HW-GA1
Full Voltage Adaptor		For use with even number of contacts.	Fingersafe	TW-DA1FB
			Exposed	TW-DA1B
Transformer Unit (6V secondary voltage)		120VAC 240VAC 480VAC	Fingersafe	TW-F126B TW-F246B TW-F486B
		120V 240V 480V	Spring Up	HW-T126 HW-T246 HW-L486
		120V 240V 480V	Exposed	TW-T126B TW-T246B TW-T486B
DC-DC Converter		110VDC		HW-L16D

HW-GA1 "Dummy Block with full voltage adaptor" does not require the use of HW-LH3.

Part Numbers: Anti-Rotation Ring

Appearance	Part Number
	HW9Z-RL

Use with notched panel cut-out to prevent unit rotation.

LED Color Code

Color	Code	Color	Code
Amber	A	Blue	S
Green	G	White	W
Red	R	Yellow	Y

Mono Lever Switches (Assembled)

Part Number Guide

	①		②					③
HW1M-	L	F	0	1	0	1	–	20
			up	right	down	left		
	Type		Lever Action					Circuit Number

Description		Code	Remarks
① Type	Standard	(blank)	Interlocking mechanism prevents inadvertent activation
	Interlocking	L	
② Lever Action	Maintained	1	Fill in desired action for each position: Up/Right/Down/Left
	Spring	2	
	Blocked	0	
③ Circuit Number		20	See Circuit Diagrams below
		40	
		22N9	

Part Numbers: Mono Lever Switches

Description	No. of Positions	Part Number
HW1M Standard Lever	2	HW1M-F1010-20
		HW1M-F2020-20
		HW1M-F0101-20
		HW1M-F0202-20
		HW1M-F0101-40
		HW1M-F0202-40
	4	HW1M-F1111-22N9
		HW1M-F2222-22N9
HW1M-L Interlocking Lever	2	HW1M-LF1010-20
		HW1M-LF2020-20
		HW1M-LF0101-20
		HW1M-LF0202-20
		HW1M-LF0101-40
		HW1M-LF0202-40
	4	HW1M-LF1111-22N9
		HW1M-LF2222-22N9

Circuit Diagrams

2 Position Left/Right

Circuit Number	Contact Mounting		Position		
	No.		Left	Center	Right
20	1	HW-F10	X	0	0
	2	HW-F10	0	0	X
40	1	HW-F10	X	0	0
	2	HW-F10	0	0	X
	3	HW-F10	X	0	0
	4	HW-F10	0	0	X

2 Position Up/Down

Circuit Number	Contact Mounting		Position		
	No.		Down	Center	Up
20	1	HW-F10	X	0	0
	2	HW-F10	0	0	X
40	1	HW-F10	X	0	0
	2	HW-F10	0	0	X
	3	HW-F10	X	0	0
	4	HW-F10	0	0	X

3 Position

Circuit Number	Contact Mounting		Position				
	No.		Down	Left	Center	Up	Right
30	1	HW-F01	0	O	0	0	X
	2	HW-F01	X	0	0	O	0
	3	HW-F10	0	X	0	0	O

4 Position

Circuit Number	Contact Mounting		Position				
	No.		Down	Left	Center	Up	Right
22N9	1	HW-F01	0	O	0	0	X
	2	HW-F01	X	0	0	O	0
	3	HW-F10	0	X	0	0	O
	4	HW-F10	O	0	0	X	0

Other circuit arrangements available, contact IDEC for details.

Mono Lever Switches (Sub- Assembled)

Contact Blocks	+	Mounting Adaptor	+	Anti-Rotation Ring	+	Operator	=	Complete Part

Part Numbers: Operators

Appearance	# of Positions	Description	Part Number
Standard	2	Maintained Up/Down	HW1M-1010
		Spring return Up/Down	HW1M-2020
		Maintained Left/Right	HW1M-0101
		Spring return Left/Right	HW1M-0202
	4	Maintained, 4 position	HW1M-1111
		Spring return, 4 position	HW1M-2222
Interlocking	2	Maintained Up/Down	HW1M-L1010
		Spring return Up/Down	HW1M-L2020
		Maintained Left/Right	HW1M-L0101
		Spring return Left/Right	HW1M-L0202
	4	Maintained, 4 position	HW1M-L1111
		Spring return, 4 position	HW1M-L2222

Part Numbers: Contact Block Mounting Adaptor
(safety lever lock included)

Appearance	Part Number
	HW-CB2C

1. *Used to mount contact blocks to operator (first pair only).*
2. *IDEC strongly recommends using the safety lever lock (included) to prevent heavy vibration or maintenance personnel from unlocking contacts.*

Part Numbers: Anti-Rotation Ring

Appearance	Part Number
	HW9Z-RL

1. *Use with notched panel cutout to prevent unit rotation.*
2. *Not required when using HW series nameplates See page A3-96.*

Part Numbers: Replacement Parts

Item	Part Number
Black Cap	HW9Z-CPM
Boot	HW9Z-BLM (fits standard type operator only)

Part Numbers: Contact Blocks

Description	Part Number	
	1NO	1NC
Standard Fingersafe (IP20)	HW-F10 HW-F10R (early make)	HW-F01 HW-F01R (late break)
Spring-Up Terminal Contacts	HW-G10 HW-G10R (early make)	HW-G01 HW-G01R (late break)
Exposed Screw Terminal Contacts	HW-C10 HW-C10R (early make)	HW-C01 HW-C01R (late break)
Dummy Block	TW-DB	

1. *All assembled part numbers in catalog include standard (HW-F...) contacts.*
2. *Assembled units with spring-up terminals (HW-G...) can be ordered by removing an "F" from the part number (Ex. HW1B-M1F11-R becomes HW1B-M111-R).*
3. *Units with exposed screw terminals (HW-C...) must be ordered as sub-components.*

Pushbutton Selectors (Assembled)

Part Numbers: 2–Position Pushbutton Selectors

Contacts	Mounting		Operator Position Left Normal	Left Depressed	Right Normal	Right Depressed	Part Number
2NO	1	HW-F10	0	X	0	0	HW1R-2**D**F20-①
	2	HW-F10	0	0	0	X	
2NO-2NC	1	HW-F10	0	X	0	0	HW1R-2**D**F22N1-①
	2	HW-F10	0	0	0	X	
	3	HW-F01	X	0	X	X	
	4	HW-F01	X	X	X	0	
2NO-2NC	1	HW-F10	0	X	0	0	HW1R-2**E**F22N1-①
	2	HW-F10	0	0	0	X	
	3	HW-F01	0	0	X	X	
	4	HW-F01	X	X	0	0	
2NO-2NC	1	HW-F10	0	0	0	X	HW1R-2**F**F22N1-①
	2	HW-F10	0	X	0	0	
	3	HW-F01	0	0	X	0	
	4	HW-F01	X	0	0	0	

1. Available only with momentary pushbutton and maintained selector.
2. In place of ①, specify the button color code from table below
3. Other contact arrangements available. Contact IDEC for details.
4. All assembled parts use flush buttons.
*5. **Normal** position refers to the button flush with the selector ring.*
*6. **Depressed** position refers to the button being pushed in.*

① Button Color Code

Color	Code
Black	B
Green	G
Red	R
Blue	S
White	W
Yellow	Y
Grey	N

Pushbutton Selectors (Partial-Assemblies)

Contact Assembly	+	Operator/Button	=	Complete Part

Part Numbers: Operators

Appearance	Description	Part Number
	Cam D	HW1R-2D-①
	Cam E	HW1R-2E-①
	Cam F	HW1R-2F-①

In place of ① specify Button Color Code.

Part Numbers: Contact Assemblies

Style	Contacts	Part Number
Standard Fingersafe Contacts	1NO 1NC 1NO/1NC 2NO 2NC 2NO/2NC	HW-CBF10 HW-CBF01 HW-CBF11 HW-CBF20 HW-CBF02 HW-CBF22
Spring Up Terminal Contacts	1NO 1NC 1NO/1NC 2NO 2NC 2NO/2NC	HW-CB10 HW-CB01 HW-CB11 HW-CB20 HW-CB02 HW-CB22

① Button Color Code

Color	Code
Black	B
Green	G
Red	R
Blue	S
White	W
Yellow	Y
Grey	N

Pushbutton Selectors (Sub-Assembled)

Contact Blocks	+	Contact Mounting Adaptor	+	Anti-Rotation Ring	+	Operator	+	Button	=	Complete Part

Part Numbers: Operators

Appearance	Description	Part Number
	Cam D	HW1R-2D
	Cam E	HW1R-2E
	Cam F	HW1R-2F
	Cam N	HW1R-2N

Part Numbers: Buttons

Description	Part Number
Round Flush	HW1A-B1-①

In place of ① specify Button Color Code.

Part Numbers: Anti-Rotation Ring

Appearance	Part Number
	HW9Z-RL

1. *Use with notched panel cutout to prevent unit rotation.*
2. *Not required when using HW series name-plates See page A3-96.*

Part Numbers: Contact Block Mounting Adaptor
(safety lever lock included)

Appearance	Part Number
	HW-CB2C

1. *Used to mount contact blocks to operator (first pair only).*
2. *IDEC strongly recommends using the safety lever lock (included) to prevent heavy vibration or maintenance personnel from unlocking contacts.*

Part Numbers: Contact Blocks

Description	Part Number	
	1NO	1NC
Standard Fingersafe (IP20)	HW-F10 HW-F10R (early make)	HW-F01 HW-F01R (late break)
Spring-Up Terminal Contacts	HW-G10 HW-G10R (early make)	HW-G01 HW-G01R (late break)
Exposed Screw Terminal Contacts	HW-C10 HW-C10R (early make)	HW-C01 HW-C01R (late break)
Dummy Block	TW-DB	

1. *All assembled part numbers in catalog include standard (HW-F...) contacts.*
2. *Assembled units with spring-up terminals (HW-G...) can be ordered by removing an "F" from the part number (Ex. HW1B-M1F11-R becomes HW1B-M111-R).*
3. *Units with exposed screw terminals (HW-C...) must be ordered as sub-components.*

① Button Color Code

Color	Code
Black	B
Green	G
Red	R
Blue	S
White	W
Yellow	Y
Grey	N

Operator Truth Tables

HW Pushbutton Selector Switches - Cam D

Contact	Mounting Position	Operator Position: Left ↖ Button Free	Left ↖ Button Pressed	Right ↗ Button Free	Right ↗ Button Pressed
HW-F10 (NO)	Left	0	X	0	0
	Right	0	0	0	X
HW-F01 (NC)	Left	~~X~~	0	~~X~~	~~X~~
	Right	~~X~~	~~X~~	~~X~~	0
HW-F10R (NO-EM)	Left	0	~~X~~	0	0
	Right	0	0	0	X
HW-F01R (NC-LB)	Left	~~X~~	0	~~X~~	~~X~~
	Right	~~X~~	~~X~~	~~X~~	0

HW Pushbutton Selector Switches - Cam E

Contact	Mounting Position	Operator Position: Left ↖ Button Free	Left ↖ Button Pressed	Right ↗ Button Free	Right ↗ Button Pressed
HW-F10 (NO)	Left	0	X	0	0
	Right	0	0	0	X
HW-F01 (NC)	Left	0	0	~~X~~	~~X~~
	Right	~~X~~	~~X~~	0	0
HW-F10R (NO-EM)	Left	~~X~~	~~X~~	0	0
	Right	0	0	~~X~~	~~X~~
HW-F01R (NC-LB)	Left	~~X~~	0	~~X~~	~~X~~
	Right	~~X~~	~~X~~	~~X~~	0

HW Pushbutton Selector Switches - Cam F

Contact	Mounting Position	Operator Position: Left ↖ Button Free	Left ↖ Button Pressed	Right ↗ Button Free	Right ↗ Button Pressed
HW-F10 (NO)	Left	0	0	0	X
	Right	0	X	0	0
HW-F01 (NC)	Left	0	0	X	0
	Right	X	0	0	0
HW-F10R (NO-EM)	Left	~~X~~	~~X~~	0	X
	Right	0	X	~~X~~	~~X~~
HW-F01R (NC-LB)	Left	~~X~~	~~X~~	~~X~~	0
	Right	~~X~~	0	~~X~~	~~X~~

HW Pushbutton Selector Switches - Cam N

Contact	Mounting Position	Operator Position: Left ↖ Button Free	Left ↖ Button Pressed	Right ↗ Button Free	Right ↗ Button Pressed
HW-F10 (NO)	Left	0	X	0	X
	Right	0	X	0	X
HW-F01 (NC)	Left	0	0	X	0
	Right	X	0	0	0
HW-F10R (NO-EM)	Left	~~X~~	~~X~~	0	X
	Right	0	X	~~X~~	~~X~~
HW-F01R (NC-LB)	Left	~~X~~	0	~~X~~	0
	Right	~~X~~	0	~~X~~	0

Contactor Reset Button

Part Numbers: Reset Buttons (Assembled)

Appearance		Plastic Bezel	Metal Bezel
	(Blank)	HW1B-M1RS-①T	HW4B-M1RS-①T
	Engraved "R"	HW1B-M1RS-①T-ENG-R	HW4B-M1RS-①T-ENG-R

1. In place of ① specify Button Color Code.
2. 5.1" (130mm) overall length.
3. 16mm flat base for easy alignment

① Button Color Code

Color	Code
Black	B
Green	G
Grey	N
Red	R
Blue	S
White	W
Yellow	Y

A3

Switches & Pilot Devices

Sub-Assemblies

Rod	+	Operator	+	Button	=	Complete Part

Part Numbers: Button

Appearance	Part Number
	HW1A-B1-①

In place of ① specify Button Color Code from table.

Part Numbers: Operator

Appearance	Plastic	Metal
	HW1B-M0	HW4B-M0

Part Numbers: Rod

Appearance	Part Number
	HW9Z-RS-TK2141

① Button Color Code

Color	Code
Black	B
Green	G
Grey	N
Red	R
Blue	S
White	W
Yellow	Y

Nameplates — HW Series

Part Numbers: Nameplates

	HWAM–Black Plastic	HWAQ–Black Plastic	HWAS–Black Plastic	HWAV–Yellow Plastic
	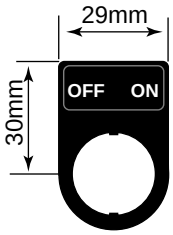	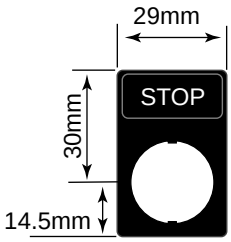	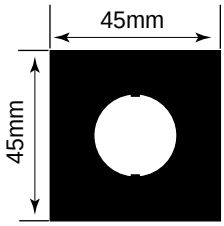	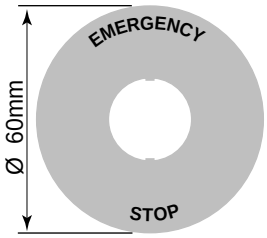
	Part Number	**Part Number**	**Part Number**	**Part Number**
Nameplate (blank engraving plate included)	HWAM-0B	HWAQ-0B	HWAS-0B	HWAV-0
Nameplate (engraved)	HWAM-①	HWAQ-①	HWAS-①	HWAV-27* HWAV5-27†
Additional Insert (blank)	HWNP-0	HWNP-0	HWNP Dimensions 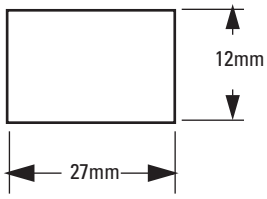	
Additional Insert (engraved)	HWNP-①	HWNP-①		

1. In place of ①, insert either the standard legend code from table below or custom engraving delimited by " ".
2. Standard engravings are available at no charge.
*3. * HWAV-27 comes engraved "Emergency Stop" as shown in drawing.*
4. † HWAV5-27 for 80mm diameter jumbo mushroom comes engraved "Emergency Stop" as shown in drawing.

Standard Legend Codes

Pushbuttons				Pushbuttons/Selector Switches				Selector Switches	
Legend	**Code**	**Legend**	**Code**	**Legend**	**Code**	**Legend**	**Code**	**Legend**	**Code**
AUTO	101	OPEN	116	AUTO-MAN	201			AUTO-MAN-OFF	301
CLOSE	102	OUT	117	CLOSE-OPEN	202			AUTO-OFF-MAN	302
DOWN	103	RAISE	118	DOWN-UP	203			CLOSE-OFF-OPEN	303
EMERG.STOP	104	RESET	119	FAST-SLOW	204	REV-FOR	216	DOWN-OFF-SLOW	304
FAST	105	REVERSE	120	FOR-REV	205	RUN-JOG	217	FAST-OFF-SLOW	305
FORWARD	106	RUN	121	HAND-AUTO	206	RUN-SAFE	218	FOR-OFF-REV	306
HAND	107	SLOW	122	HIGH-LOW	207	SAFE-RUN	219	LEFT-OFF-RIGHT	307
HIGH	108	START	123	JOG-RUN	208	SLOW-FAST	220	LOWER-OFF-RAISE	308
IN	109	STOP	125	LEFT-RIGHT	209	START-STOP	221	OFF-MAN-AUTO	309
INCH	110	TEST	126	LOWER-RAISE	210	STOP-START	222	OFF-SLOW-FAST	310
JOG	111	UP	127	MAN-AUTO	211	UP-DOWN	223	OFF-1-2	311
LOW	112	I (Int'l On)	150	OFF-ON	212	OI (Int'l OFF ON)	250	OPEN-OFF-CLOSE	312
LOWER	113	O (Int'l Off)	151	ON-OFF	213			SLOW-OFF-FAST	313
OFF	114	EMO	152	OPEN-CLOSE	214			SUMMER-OFF-WINTER	314
ON	115			RAISE-LOWER	215			UP-OFF-DOWN	315
								1-OFF-2	316
								HAND-OFF-AUTO	317

1. To order engraved nameplates, add legend code to nameplate part number.
2. Character height based on the number of characters and size of nameplate. Standard character size is 3/16".
3. Nameplates with standard legends are the same list price as blank nameplates.
4. Nameplates have built-in anti-rotation feature for use with notched panel cut-outs. Additional anti-rotation ring (HW9Z-RL) is not necessary.

Nameplates Order Form — HW Series

Copy this order form and use it to specify Letter Height, Custom Engravings, Location of Engraving on Nameplate, and Quantity Desired.
To insure engraving accuracy, fax it to your IDEC representative or Distributor.

Your Company: _____ IDEC Rep/Distributor Contact: _____
Name: _____ PO number (if known): _____
Telephone: _____ IDEC Rep/Distributor Phone: _____
Fax & Email _____ IDEC Rep/Distributor Fax & Email _____

HWAM Nameplate

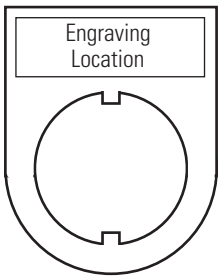

Step 1.
Choose Letter Size - 7/64" or 1/8".
Check the box for the letter size you want. Then write your lettering in box below checkboxes. Note: 1/8" size letters cannot exceed 9 characters.

Step 2.
Specify Quantity.
Enter the number of nameplates desired in the box on the right.

Qty

7/64" Letter Size ☐ 11 characters max (for 7/64" size letters)

1/8" Letter Size ☐ 9 characters max (for 1/8" size letters)

1 2 3 4 5 6 7 8 9 10 11

Sample Letter Sizes
7/64" Letters: A B C D
1/8" Letters: A B C D

HWAQ Nameplate

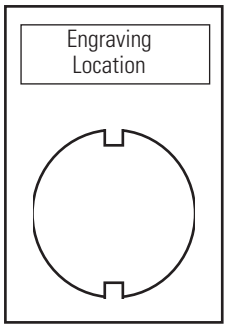

Step 1.
Choose Letter Size - 7/64" or 1/8".
Check the box for the letter size you want. Then write your lettering in box below checkboxes. Note: 1/8" size letters cannot exceed 9 characters.

Step 2.
Specify Quantity.
Enter the number of nameplates desired in the box on the right.

Qty

7/64" Letter Size ☐ 11 characters max (for 7/64" size letters)

1/8" Letter Size ☐ 9 characters max (for 1/8" size letters)

1 2 3 4 5 6 7 8 9 10 11

Sample Letter Sizes
7/64" Letters: A B C D
1/8" Letters: A B C D

HWAS Nameplate

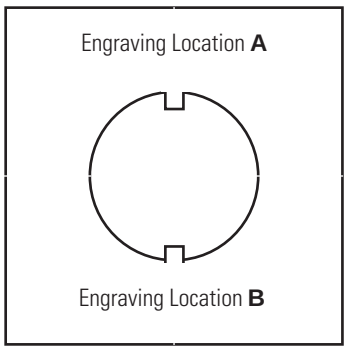

Step 1.
Choose Letter Size - 1/8" or 3/32".
Check the box for the letter size you want. Then write your lettering in box below check-boxes. Note: 1/8" size letters cannot exceed 14 characters.

3/32" Letter Size ☐ 20 characters maximum (for 3/32" size letters)

1/8" Letter Size ☐ 14 characters maximum (for 1/8" size letters)

1 2 3 4 5 6 7 8 9 10 11 12 13 14 15 16 17 18 19 20

Step 2.
Specify Quantity.
Enter the number of nameplates desired in box on the right.

Qty

Step 3.
Specify Location.
Enter the location of engraving (A or B), in box on the right.

Location

Sample Letter Sizes
3/32" Letters: A B C D
1/8" Letters: A B C D

Accessories — HW Series

	Appearance	Description/Usage	Part Number	
Locking Ring Wrench		Metallic tool used to tighten the plastic locking ring when installing the HW series unit in a panel	MW9Z-T1	
Lamp/LED Removal Tool		Rubber tool makes lamp/LED removal easier.	OR-55	
Anti-Rotation Ring		Prevents rotation of switches in panel. (included with all assembled switches)	for notched panel cutout (standard)	HW9Z-RL
			for round panel cutout	LW9Z-L
Rubber Mounting Hole Plug		Black rubber plug fills unused mounting holes in panel.	OB-31	
Metallic Mounting Hole Plug		For plugging unused mounting holes in the panel. Tighten the attached locking ring to a torque of 12 kfg-cm maximum Degree of protection: IP66	LW9Z-BM	
Barrier		To prevent contact between adjacent lead wires when control units are tightly mounted	HW-VL1	
Pushbutton Clear Boot		Used to cover and protect pushbuttons Operating temperature: –50 to +60°C	Flush Pushbuttons	OC-31
			Extended Pushbuttons	OC-32
Padlock Cover		Plastic hinged cover to protect pushbuttons or selector switches. (Not intended for E-Stops) Degree of protection: IP65	HW9Z-KL1	
Tab Terminal Adapter		Tab #250 (6.35 x 0.8mm): Single tab	TW-FA1	
Adaptor (22mm to 30mm)		Used to mount round HW series control unit (except Jumbo Mushroom, unibody, and square units) into a 30mm panel cut-out. (includes both pieces)	HW9Z-A30	
Replacement Safety Lever Lock		Used to prevent contact mounting lever from moving due to heavy vibration or panel maintenance. (included with all Contact Block Mounting Adaptors)	HWLS-TK1971	
Reset Rod for Contactors Overload		5" rod used with HW1B-M0. See Contactors Section D for more information.	HW9Z-RS-TK2141	
Replacement Operator Washer		Provided with operator. Insert between bezel and locking ring.	HWM-WASHER	
Replacement Locking Ring		Plastic locking nut comes with all HW operators & assemblies.	Standard (plastic)	HW9Z-LN
			Optional (metal)	HW9Z-LNM
Switch Cover (Square)		Used only with round or square flush pushbuttons.	HW9Z-K1 (spring return) HW9Z-K11 (maintained cover)	
Replacement Keys		Pair of Keys (#231)	HW9Z-SKP	

	Appearance	Description/Usage	Part Number
Replacement Lens		HW Illuminated Unibody Replacement Lens	HWLV-LENSR
Replacement Jumbo Dome Lens		Polycarbonate Replacement Lens	HW1A-P5① ① = (A, G, R, S, W, Y)
Replacement Jumbo Diffusing Lens			HW9Z-PP5C
Replacement LED Lamps for HW Jumbo Dome		Replacement LED Lamp	LSTDB-2① ① = (A, G, R, S, W, Y)
Rubber Cover for Dual Pushbuttons		Clear Silicon rubber cover	HW9Z-D7D
Barrier for Dual Pushbuttons	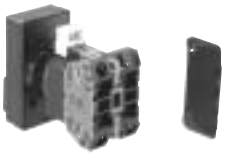	Plastic barrier. Used when mounting the HW7 units on 30mm horizontal centers, to prevent possible interconnections between adjoining terminals.	HW-VG1

Dimensions — HW Series

Non-Illuminated Pushbuttons

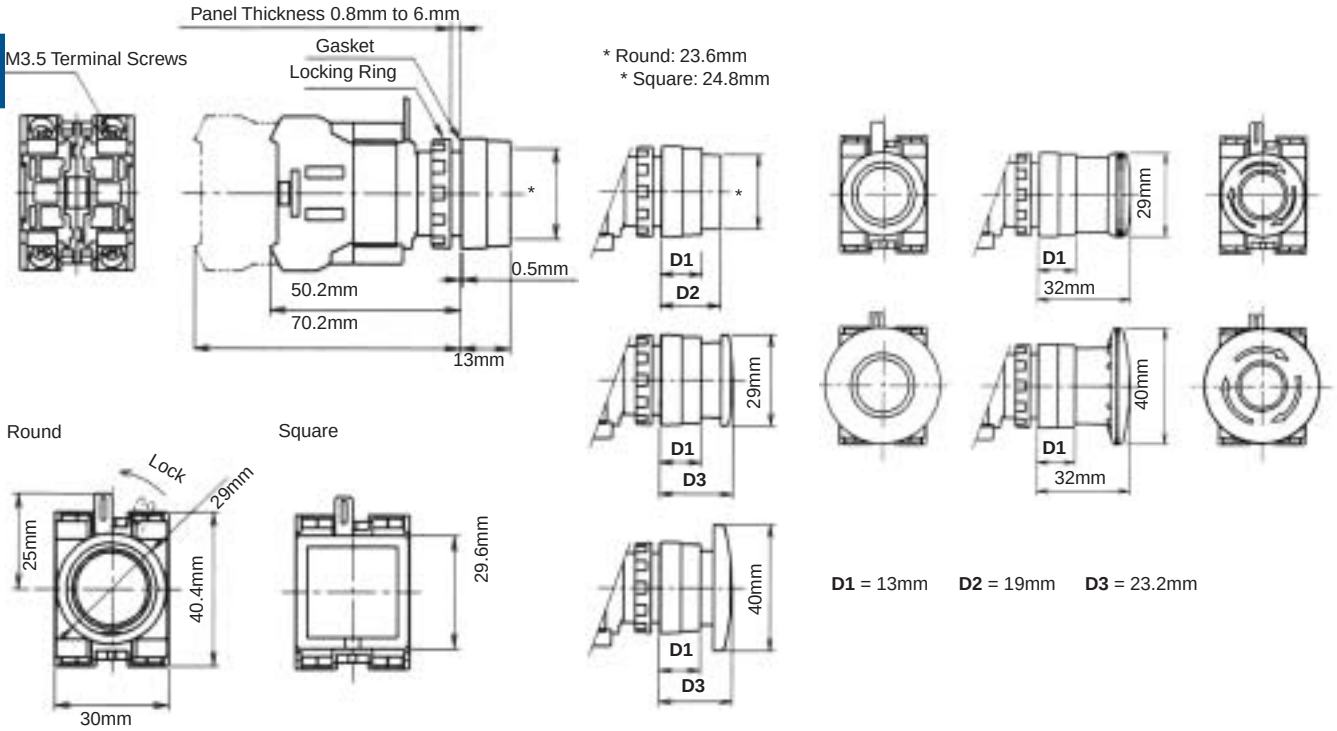

Monolever

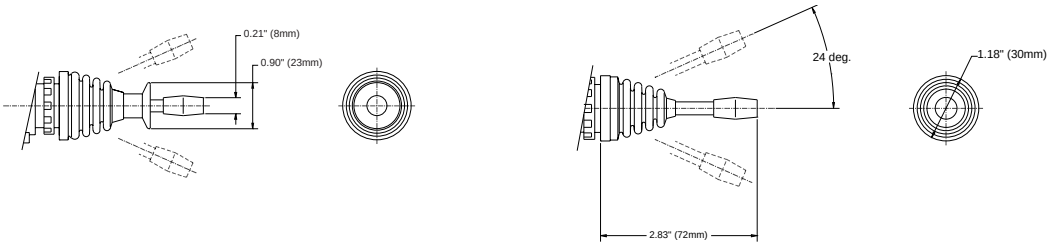

Pilot Lights

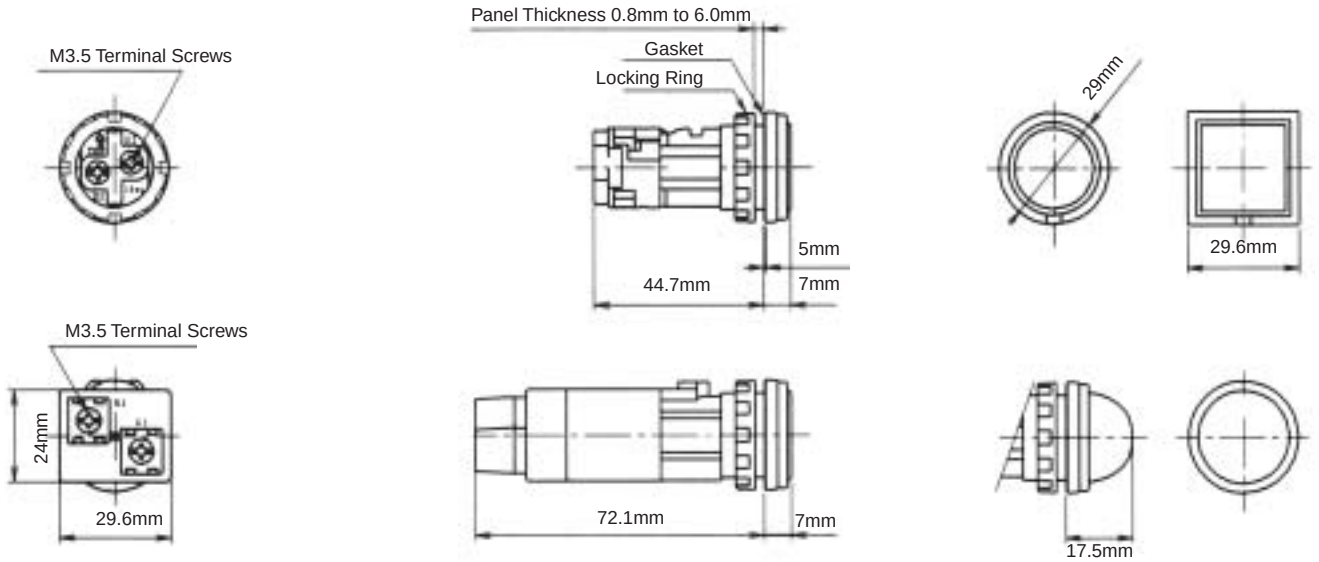

Dimensions con't

Jumbo Mushroom Pushbutton

HW1B-M5

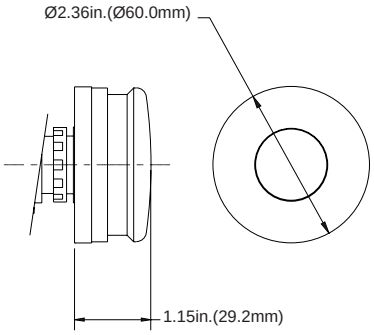

HW1B-V5

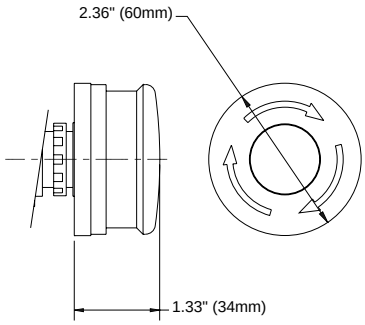

Illuminated Pushbuttons

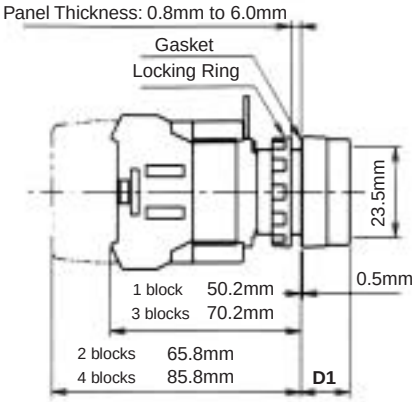

Mushroom

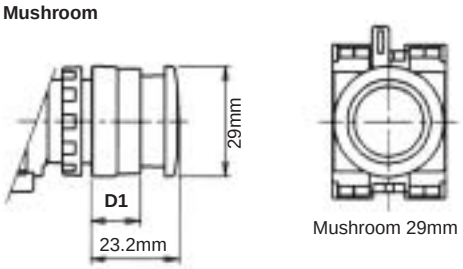

Extended with Full Shroud

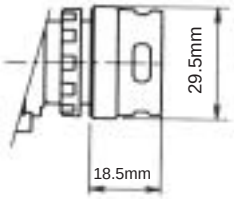

W/ Transformer

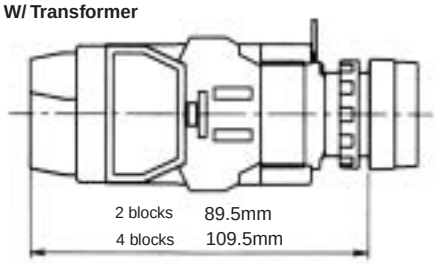

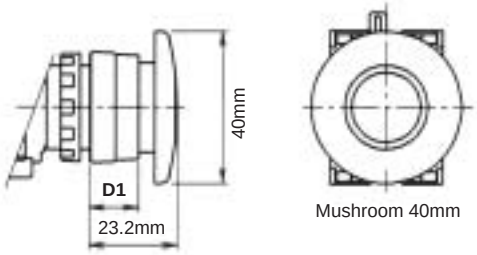

Extended

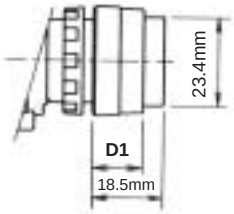

Round

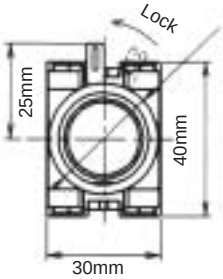

24V AC/DC

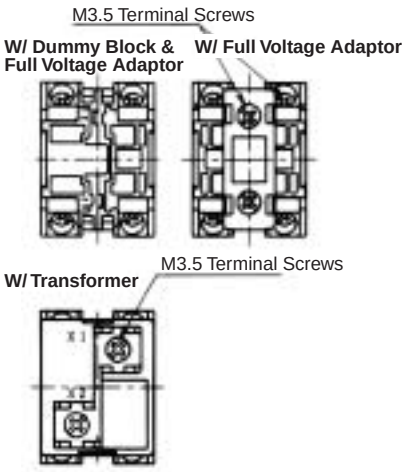

Square

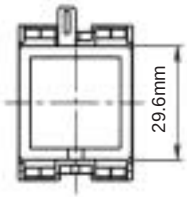

D1 = 0.51" 13mm

Dimensions con't

Unibody

Illuminated

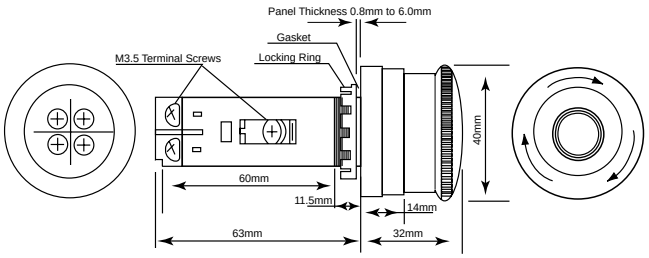

Non-Illuminated

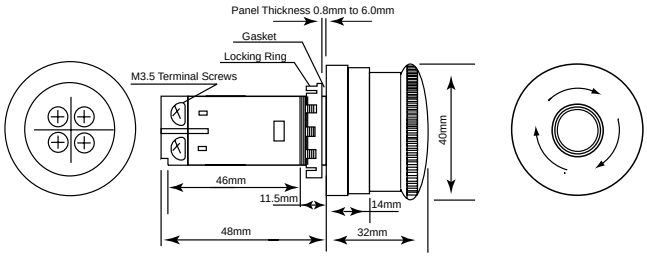

Selector Switches

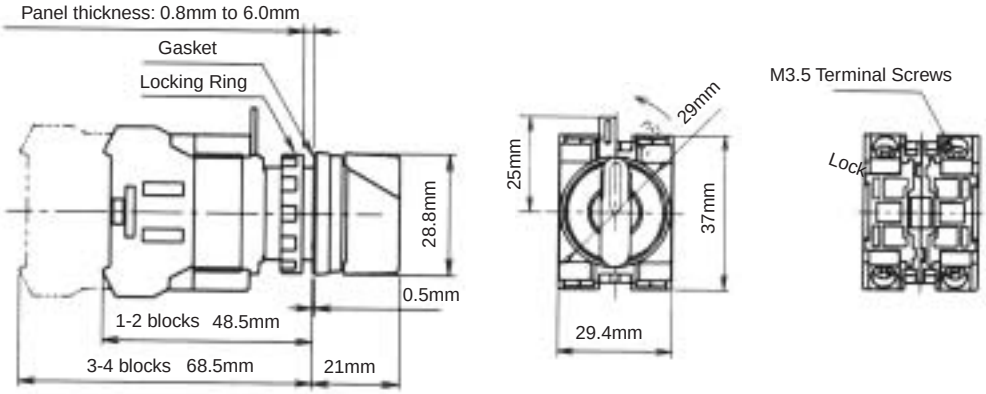

Illuminated Selector Switches

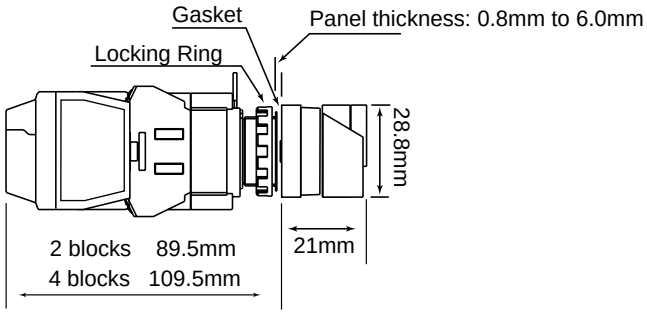

Pushlock Key Reset

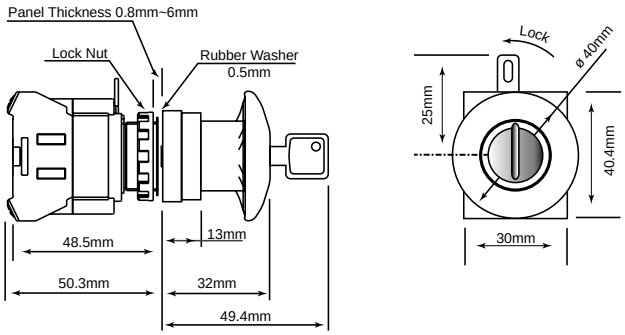

Key Switches

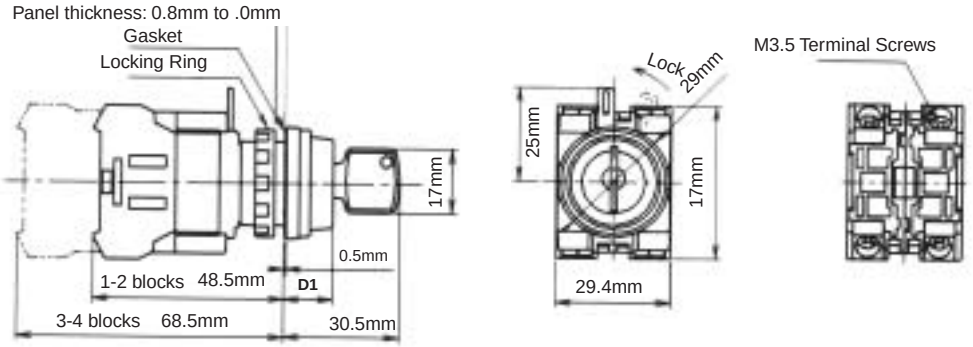

D1 = 13mm

Dimensions con't

Dual Pushbutton Switches

Without Pilot Light

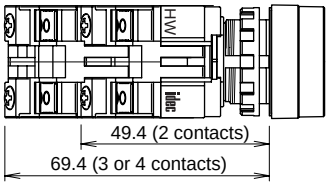

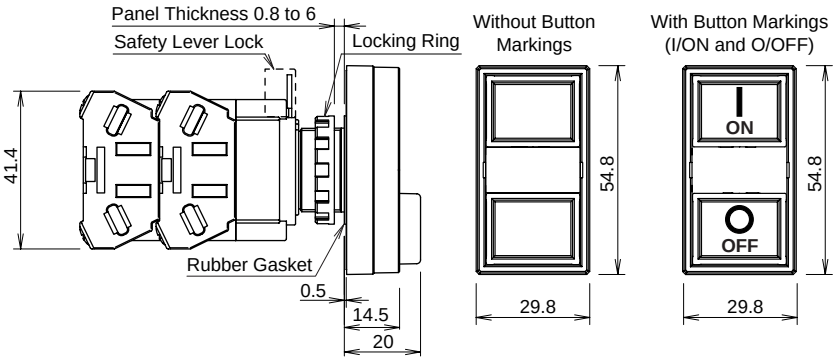

With Pilot Light
• Full Voltage

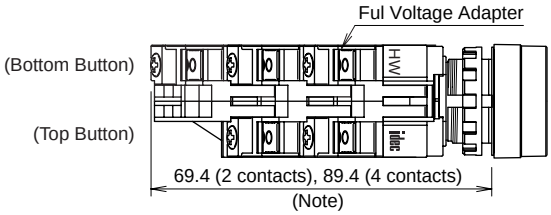

• The depth of 3-contact type depends on the combination of contact blocks at top and bottom pushbuttons.

Top Button	1 contact block	2 contact blocks
Bottom Button	2 contact blocks	1 contact block
Depth	89.4 mm	69.4 mm

•Transformer (240V maximum)

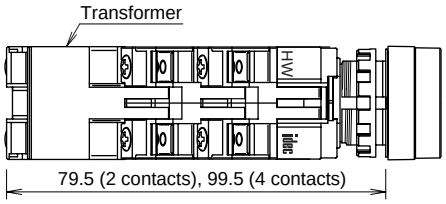

• Transformer (480V)

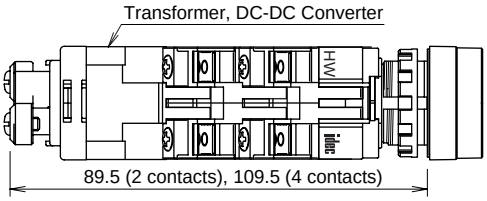

Mounting Hole Layout

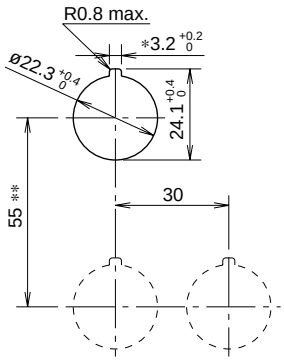

- The 3.2 mm recess is for preventing rotation and is not necessary when a nameplate or anti-rotation ring is not used.
- When using the safety lever lock, determine the vertical spacing in consideration of convenience for installing and removing the safety lever lock.
- Recommended vertical spacing: 100 mm
- The minimum mounting centers are applicable to switches with one layer of contact blocks (two contact blocks). When two layers of contact blocks are mounted, determine the minimum mounting centers in consideration of convenience for wiring.

All dimensions in mm.

Dimensions con't

Jumbo Dome Pilot Lights

Dimensions

All dimensions in mm.

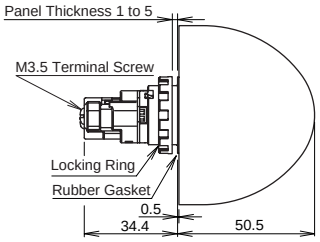

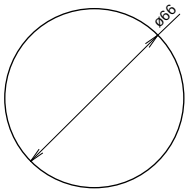

LED Lamp LSTDB

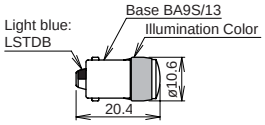

Incandescent Lamp LSB

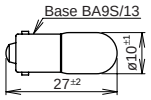

Mounting Hole Layout

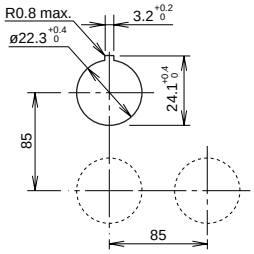

Accessory Dimensions

LW9Z-BM
Metallic Mounting Hole Plug

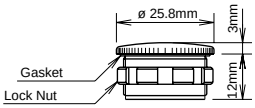

OB-31
Rubber Mounting Hole Plug

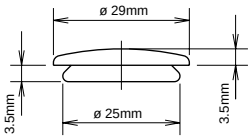

HW9Z-RL
Anti-Rotation Ring

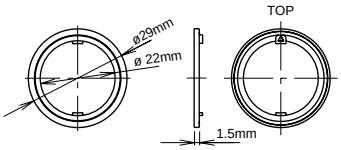

OR-55
Lamp/LED Removal Tool

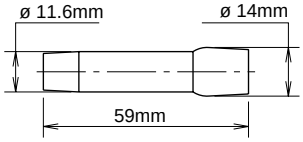

HW9Z-D7D
Dual Pushbutton Rubber Cover

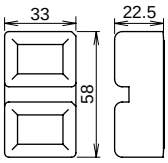

HW-VG1
Dual Pushbutton Barrier

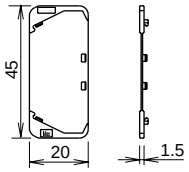

MW9Z-T1
Locking Ring Wrench

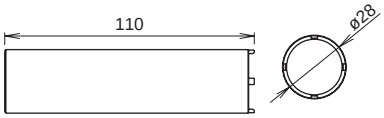

HW9Z-KL1
Padlock Cover

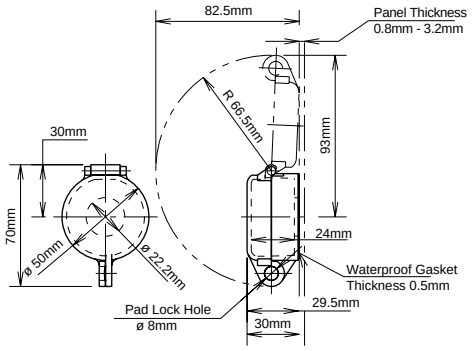

HW-VL1
Barrier

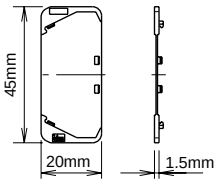

HWLS-TK1971
Safety Lever Lock

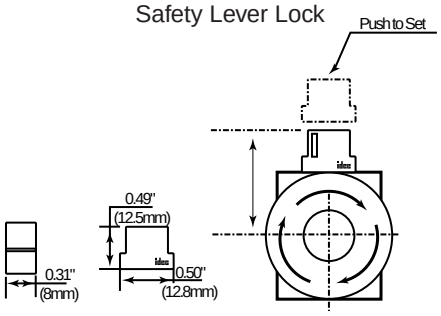

Mounting Hole Layout

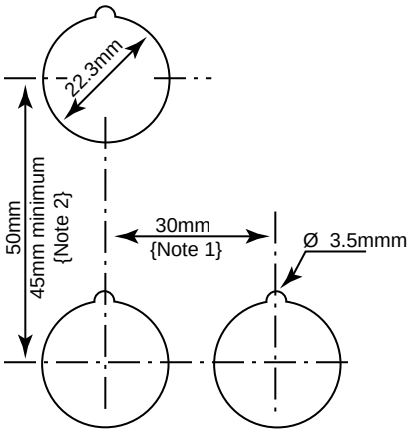

Note 1: Mushroom Button 40mm Type: 40mm or more
Note 2: Pilot Light: 30mm minimum

The values represent the minimum mounting centers when one stack of contact blocks is used. When two stacks or an illuminated unit is used, refer to the dimensions and considerwiring accessibility to determine minimum mounting centers.

Accessory Dimensions con't

HW9Z-KG1-TK2120

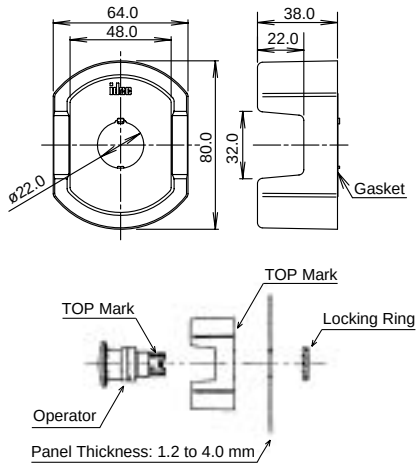

HW9Z-KG2-TK2120

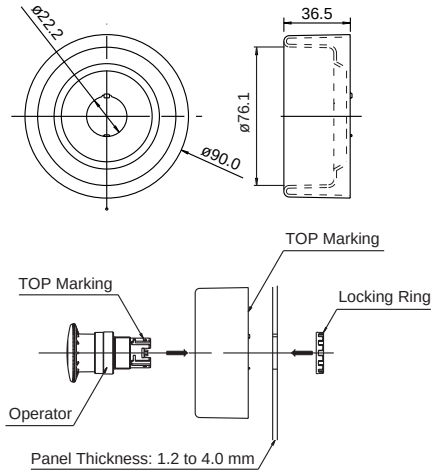

Specification Charts — HW Series

Rated Operational Power DC Voltage

Inductive

DC Voltages

Voltage V	24	48	110
Current A	4	2	1.1

AC Voltages

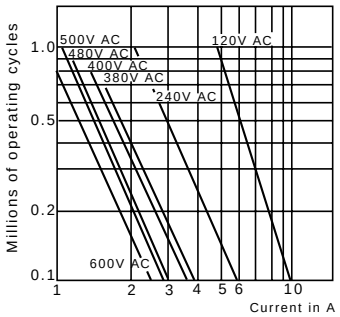

Conforming to IEC 947-5-1 Appendix C.
Utilization categories AC-15 and DC-13.
Operation rate: 1,800 op. hour
Load factor: 0.4 ± 0.05

Resistive

DC Voltages

Voltage V	24	48	110
Current A	8	4	2.2

AC Voltages

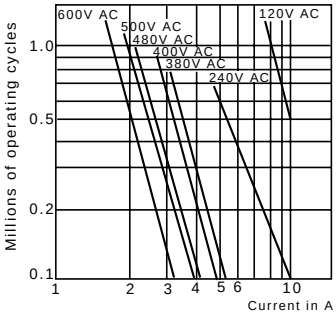

Conforming to IEC 947-5-1 Appendix C.
Utilization categories AC-15 and DC-13.
Operation rate: 1,800 op. hour
Load factor: 0.9 ± 0.05

HW Safety Precautions

HW Series Safety Precautions

- Turn off power to HW series control units before starting installation, removal, wiring, maintenance, and inspection of the products. Failure to turn power off may cause electrical shocks or fire hazard.
- To avoid the possibility of burning yourself, use the lamp holder tool when replacing lamps.

For wiring, use wires of a proper size to meet voltage and current requirements. Tighten the M3.5 terminal screws to a tightening torque of 1.0 to 1.3 N·m. Failure to tighten terminal screws may cause overheating and fire.

HW General Instructions

Panel Mounting

Remove the contact block assembly from the operator (for transformer type pilot lights, remove the transformer from the illumination unit). Remove the locking ring from the operator. Insert the operator into the panel cut-out from the front, tighten the locking ring from the back, then install the contact block assembly to the operator.

Removing and Installing the Contact Block Assembly

1. To remove the operator from the contact block, turn the locking lever in the direction of the arrow shown below. The operator can now be removed.
2. To reinstall, place the TOP markings on the operator and the contact block mounting adapter in the same direction, and insert the operator into the contact block mounting adapter. Then turn the locking lever in the opposite direction.

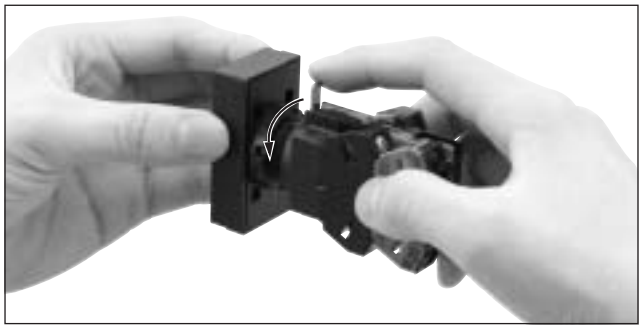

Notes for Panel Mounting

1. When mounting the operator onto a panel, use the optional locking ring wrench (MW9Z-T1) to tighten the locking ring. Tightening torque must not exceed 2.0 N·m. Do not use pliers. Excessive tightening will damage the locking ring.
2. For the contact blocks and transformers housing LED and incandescent lamps, make sure not to press the lamps too hard, otherwise the lamp socket may be damaged.

Safety Lever Lock

IDEC strongly recommends using the safety lever lock (HW9Z-LS, yellow) to prevent heavy vibration or maintenance personnel from unlocking the contact assembly.

1. HW series can be mounted vertically with a minimum spacing of 55 mm but spacing should be determined to ensure easy operation (recommended minimum spacing: 100 mm).
2. Mount the control unit onto the panel, lock the lever, and push in the safety lever lock to install.
3. When the spacing is narrower than the recommended value, with the lever unlocked, mount the safety lever lock and insert the contact unit to the operator. Then, lock the lever and strongly push in the safety lever lock to install.
4. To remove the safety lever lock, insert a flat screwdriver into the safety lever and push upwards.

Removing and Installing the Safety Lever Lock

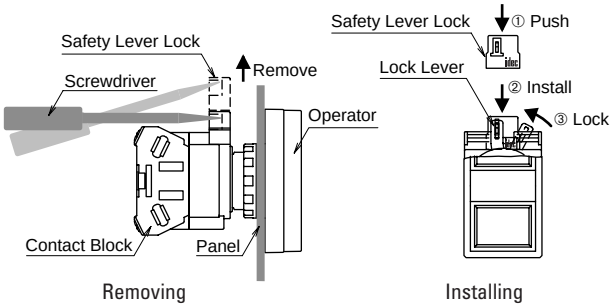

Dual Pushbutton Instructions

Replacement of Lens

Removing

- Remove the lens by inserting a screwdriver into the recess of the lens through the bezel.

Installing

- Install the lens in the recess between the buttons by pressing against the bezel.

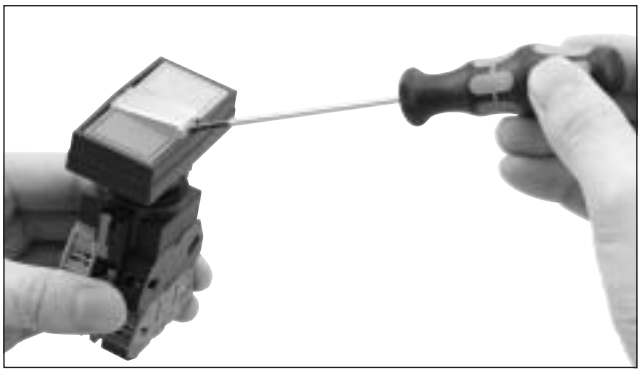

Dual Pushbuttons Instructions con't

Replacement of Lamps

Lamps can be replaced by using the lamp holder tool (OR-55) from the front of the panel, or by removing the contact block assembly from the operator unit.

Removing the Lamps from the Front of the Panel

Removal

1. To remove, slip the lamp holder tool onto the lamp head lightly. Then push slightly, and turn the lamp holder tool counterclockwise.

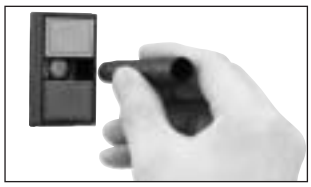

Installation

1. To install, insert the lamp head into the lamp holder tool, and hold the lamp as shown in the figure below.

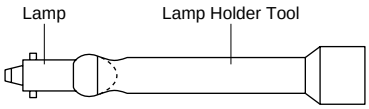

2. Place the pins on the lamp base to the grooves in the lamp socket. Insert the lamp and turn it clockwise.

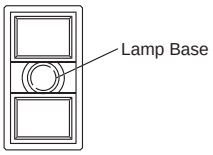

About Pushbutton Switches

The pushbuttons cannot be removed or replaced!

Do not attempt to remove using a flat screwdriver or pincers, otherwise the pushbuttons may be damaged.

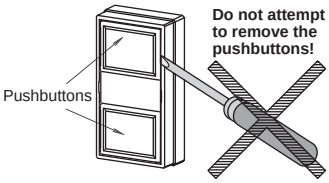

Narrow Mounting

When mounting the units closely in a horizontal row on 30mm centers, use optional barriers to prevent interconnection between adjoining terminals. The barriers can be attached simply by pressing them onto the sides of contact blocks.

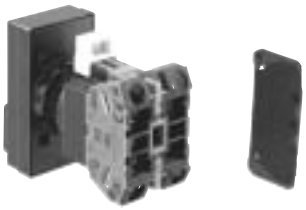

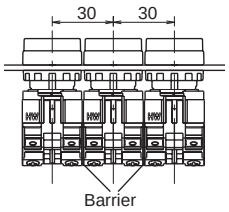

When mounting transformer type illuminated units closely in a horizontal row on 30-mm centers, insert solid wires or stranded wires into inside of the terminal screw on the transformer (see figure on the right) to prevent short circuit between adjoining terminals.

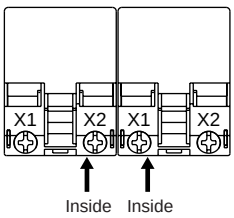

Tightening Torque for Terminal Screws

Tighten the M3.5 terminal screws to a torque of 1.0 to 1.3 N·m.

Installation of LED Illuminated Units

When using full voltage type LED illuminated units, provide protection against electrical noise, if necessary.

Applicable Wiring

The applicable wire size is 2 mm^2 maximum. (solid wire ø1.6 mm maximum) One or two wires can be connected.

Applicable Crimping Terminal

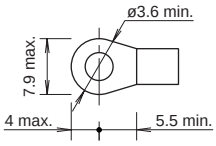

Be sure to use an insulation tube or cover on the crimping part of the crimping terminal to prevent electrical shocks.

Solid Wire

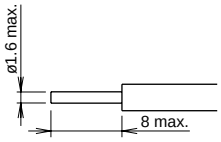

Note: When connecting wires to contact blocks or transformers in the direction shown below, keep the insulation stripping length 6.6 mm at the maximum.

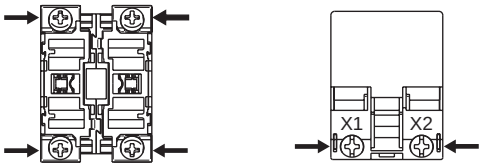

Installing the Rubber Cover

When using the HW7D pushbuttons in places where the pushbuttons are subjected to water splash or an excessive amount of dust, make sure to use the HW9Z-D7D rubber boot (IP65) which is ordered separately.

Notes for Installing the Rubber Cover
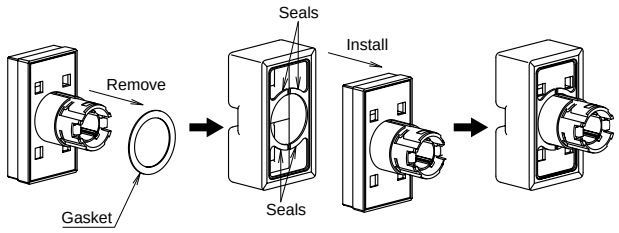
Remove the gasket from the operator, and install the rubber boot on the operator. Pull out the seals of the rubber boot and place them around the operator sleeve as shown. Make sure that the seals are not twisted or tucked inside and that the gasket does not remain, otherwise the normal waterproof and dustproof characteristics are not ensured.