THIS DRAWING IS UNPUBLISHED. RELEASED FOR PUBLICATION 20
© COPYRIGHT 20 BY TYCO ELECTRONICS CORPORATION. ALL RIGHTS RESERVED.

LOC	DIST
AP	-

CAD Pro-E WILDFIRE 2.0 DO NOT REVISE EXCEPT BY CAD

REVISIONS

P	LTR	DESCRIPTION	DATE	DWN	APVD
	0	RELEASED LEIO-0358/04	18OCT2008	NCL	PLF
	A	REVISED BY LEIO-0396/04	11/NOV/2004	JOF	PLF
	A1	REVISED BY ECO-08-022178	11SEP2008	NCL	WAO

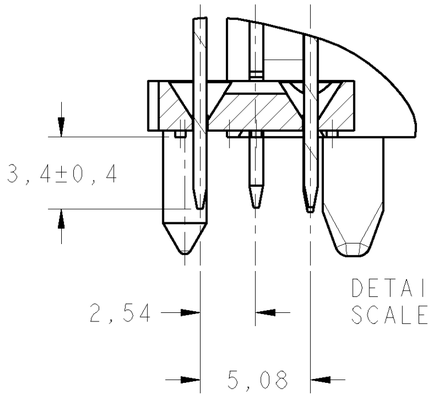

DETAIL Y
SCALE 5:1

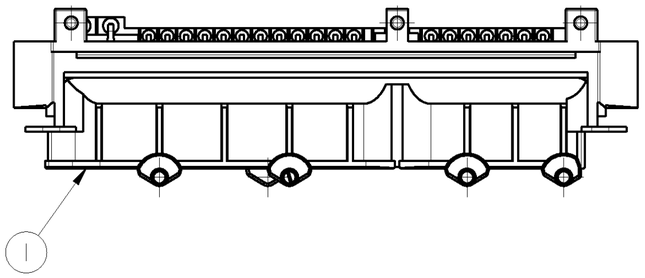

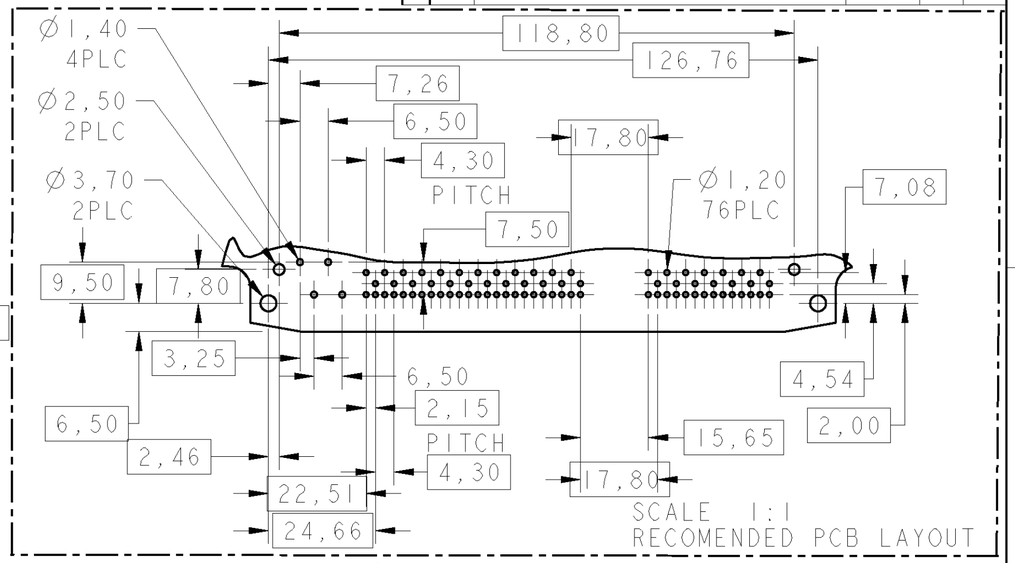

SCALE 1:1
RECOMENDED PCB LAYOUT

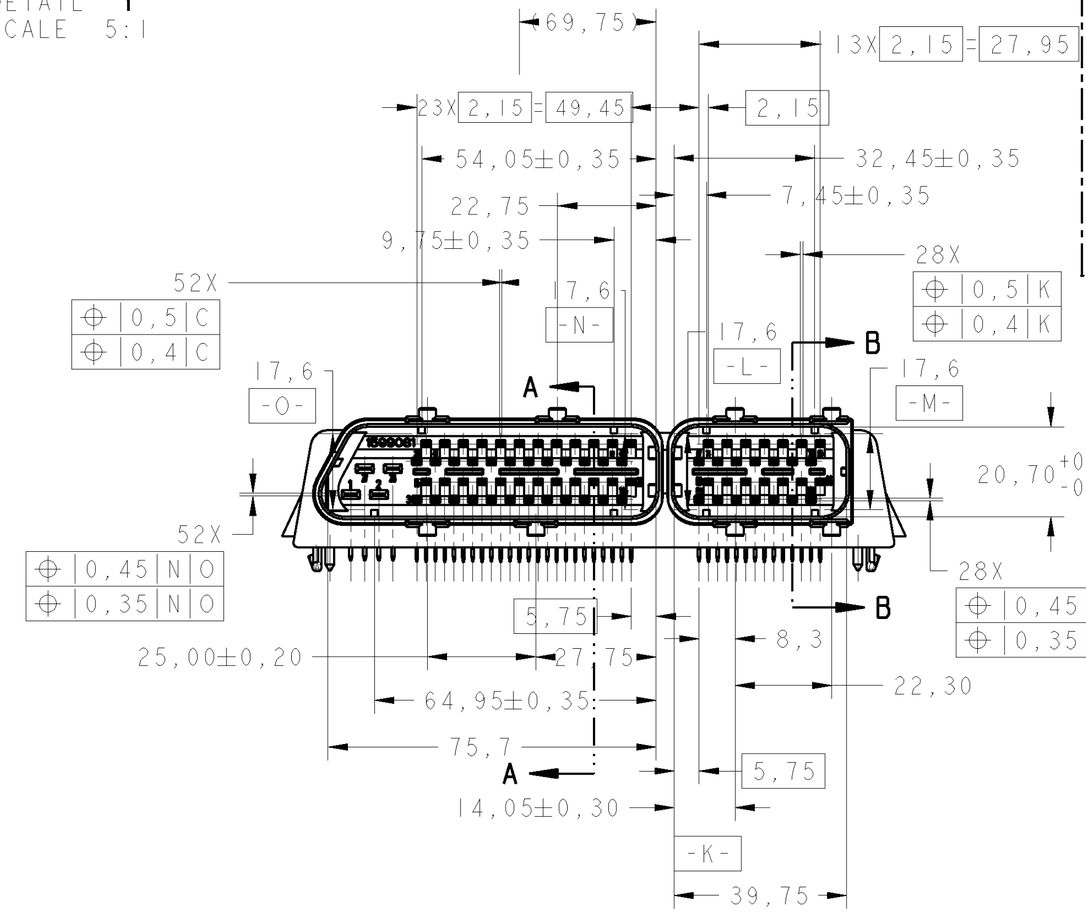

SECTION B-B

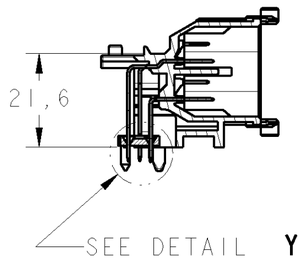

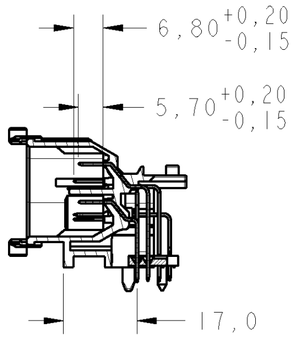

SECTION A-A

GRAVAÇÕES MARKINGS
LOGOTIPO TE TE LOGO
CÓDIGO PAÍS PRODUTOR MANUFACTURER COUNTRY CODE
NOMENCLATURA MATERIAL MATERIAL NOMENCLATURE
NÚMERO COMPONENTE TE TE COMPONENT NUMBER
NÚMERO CAVIDADE CAVITY NUMBER
IDENTIFICAÇÃO CIRCUITO CIRCUIT IDENTIFICATION
PAÍS PRODUTOR MANUFACTURER COUNTRY
REV+ LETRA REV.DA PEÇA REV.+ PART REV.LETTER
DATADOR DATE CODE

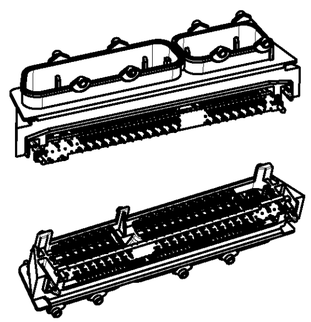

PERSPECTIVE VIEWS
SCALE 1:2

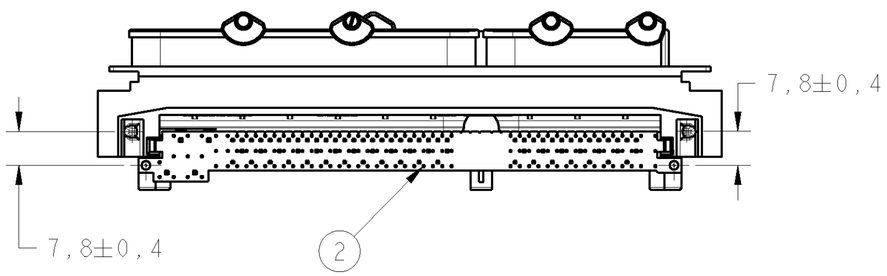

REQ.PER ASSY	ITEM	DESCRIPTION	MATERIAL	FINISH
8-1393476-0	2	PIN GUIDE 80 POSN.	PBT+GF30	AMARELO/YELLOW
	1	HOUSING, OVER MOLDED	PA66+GF30	PRETO/BLACK

THIS DRAWING IS A CONTROLLED DOCUMENT FOR TYCO ELECTRONICS CORPORATION. IT IS SUBJECT TO CHANGE AND THE CONTROLLING ENGINEERING ORGANIZATION SHOULD BE CONTACTED FOR THE LATEST REVISION.

DIMENSIONS: mm

TOLERANCES UNLESS OTHERWISE SPECIFIED:
0 PLC ±-
1 PLC ±0,3
2 PLC ±0,2
3 PLC ±-
4 PLC ±-
ANGLES ±30'

MATERIAL: SEE TABLE
FINISH: SEE TABLE

DWN NCLAPRESSA 18OCT2004
CHK PLFARIA 18OCT2004
APVD MRODRIGUES 18OCT2004
PRODUCT SPEC -
APPLICATION SPEC -
WEIGHT -

Tyco Electronics
TYCO ELECTRONICS Brasil LTDA.
Sao Paulo, Brasil

NAME
80 POSN., PIN HEADER WITH PIN GUIDE

SIZE	CAGE CODE	DRAWING NO	RESTRICTED TO
A2	00779	C-8-1393476-0	-

CUSTOMER DRAWING | SCALE 1:1 | SHEET 1 OF 1 | REV A1