# S600DC Series 2.5-Inch SAS NAND Flash SSD

## MTFDJAK400MBS, MTFDJAK400MBT, MTFDJAK800MBS, MTFDJAK800MBT, MTFDJAL1T6MBS, MTFDJAL1T6MBT, MTFDJAL3T2MBS, MTFDJAL3T2MBT, MTFDJAK480MBT, MTFDJAK960MBT, MTFDJAL1T9MBT, MTFDJAL3T8MBT, MTFDJAL1T9MBU, MTFDJAL3T8MBU, MTFDJAK200MBW, MTFDJAK400MBW

## Features

- Four endurance levels
  - S655DC = 25 DWPD; S650DC = 10 DWPD
  - S630DC = 2–3 DWPD; S610DC = <1 DWPD
- Micron® 16nm MLC NAND Flash
- RoHS-compliant package
- SAS
  - Interface = 12 Gb/s
  - Speed = 3 Gb/s, 6 Gb/s, 12 Gb/s, and auto-speed negotiation
  - SAS-3 support
- SAM-5 compliant
- Enterprise sector size support = 512, 520, 524, 528, 4096, 4160, 4192, and 4224-byte
- Hot-plug capable
- 128-entry command queue depth
- Digitally signed firmware for SED and non-SED
- FIPS140-2 level 2 certification option available on each S650DC 2.5-inch device: 400GB, 800GB, 1600GB, and 3200GB
- Secure erase via format unit
- Reliability
  - MTTF: 2.5 million device hours[1]
  - Static and dynamic wear leveling
  - Uncorrectable bit error rate (UBER): $1 \times 10^{17}$ bits transferred
- Capacity [2] (unformatted): 200GB, 400GB, 480GB, 800GB, 960GB, 1600GB, 1920GB, 3200GB, 3840GB
- Endurance: TBW over warranty period[4]
  - S655DC (25 DWPD): 200GB-8PB, 400GB-17PB
  - S650DC (10 DWPD): 400GB-7PB, 800GB-14PB 1600GB-29PB, 3200GB-58PB
- Endurance: TBW over warranty period[4]
  - S630DC (2–3 DWPD): 400GB-2.1PB, 480GB-2.6PB, 800GB-2.9PB, 960GB-5.2PB, 1600GB-5.8PB, 1920GB-10PB, 3200GB-12PB, 3840-21PB
  - S610DC (1 DWPD): 1920GB-2.8PB, 3840GB-5.6PB
- Electrical
  - Supply voltage: 5 $V_{DC}$ (±5%) and 12 $V_{DC}$ (±5%)
- Mechanical
  - 2.5-inch drive: 100.5mm × 69.85mm × 7mm, and 100.5mm × 69.85mm × 15mm
- Field-upgradeable firmware
- Power consumption: 9W (TYP) and 12W (MAX)
  - Configurable through information exceptions mode page
- Operating temperature
  - 0°C to +50°C (MAX)[3]

Notes:
1. Product achieves a mean time to failure (MTTF) based on population statistics that are not relevant to individual units.
2. 1GB = 1 billion bytes; formatted capacity is less.
3. Based on ambient air temperature.
4. Total bytes written (TBW): Warranty defined in the product manual is five years or device expiration as indicated by the device life indicator, whichever comes first.

**Warranty**: Contact your Micron sales representative for further information regarding the product, including product warranties.


Micron Technology, Inc. reserves the right to change products or specifications without notice.
© 2015 Micron Technology, Inc. All rights reserved.
Products and specifications discussed herein are subject to change by Micron without notice.

### Table 1: Performance

Notes apply to entire table

| Device and Capacity | Sequential 128KB Transfer | | Random 4KB Transfer | | Random 4KB Transfer (70/30) | Average Latency (µs) |
|---|---|---|---|---|---|---|
| | Read (MB/s) | Write (MB/s) | Read (KIOPS) | Write (KIOPS) | Mixed Read/Write (KIOPS) | |
| **S655DC** | | | | | | |
| 200GB | 1550 | 600 | 200 | 120 | 85 | 115 |
| 400GB | 1700 | 850 | 200 | 120 | 115 | 115 |
| **S650DC** | | | | | | |
| 400GB | 1550 | 625 | 180 | 67 | 80 | 115 |
| 800GB | 1850 | 850 | 200 | 80 | 105 | 115 |
| 1600GB | 1900 | 850 | 200 | 80 | 120 | 115 |
| 3200GB | 1900 | 800 | 200 | 80 | 120 | 115 |
| **S630DC** | | | | | | |
| 400GB | 1400 | 490 | 180 | 20 | 45 | 115 |
| 480GB | 1550 | 615 | 180 | 30 | 45 | 115 |
| 800GB | 1400 | 710 | 180 | 20 | 45 | 115 |
| 960GB | 1700 | 850 | 180 | 30 | 65 | 115 |
| 1600GB | 1600 | 850 | 180 | 20 | 45 | 115 |
| 1920GB | 1850 | 850 | 180 | 30 | 65 | 115 |
| 3200GB | 1600 | 850 | 180 | 20 | 45 | 115 |
| 3840GB | 1850 | 770 | 180 | 30 | 65 | 115 |
| **S610DC** | | | | | | |
| 1920GB | 1700 | 850 | 190 | 12 | 45 | 115 |
| 3840GB | 1600 | 770 | 190 | 15 | 45 | 115 |

Notes:
1. Typical I/O performance numbers: measured using an iometer in a steady state region with a queue depth of 32 for sequential and random transfers and write cache enabled; a queue depth of 1 for READ/WRITE latency values.
2. Consistent host system interface, configurations, and variables: maintained with variation only in the drive being tested.
3. Response time measurement conditions: recorded with nominal power at 25 °C ambient temperature.
4. Page-to-page response times: derived from all possible page-to-page accesses on a sequentially preconditioned drive.
5. Average response time: derived from at least 5000 access measurements between programmable pages on a randomly preconditioned drive to ensure a true statistical random average.


Micron Technology, Inc. reserves the right to change products or specifications without notice.
© 2015 Micron Technology, Inc. All rights reserved.

## Part Numbering Information

Micron's 600 series SAS SSD is available in different configurations and densities. Visit www.micron.com for a list of valid part numbers.

### Figure 1: Part Number Chart

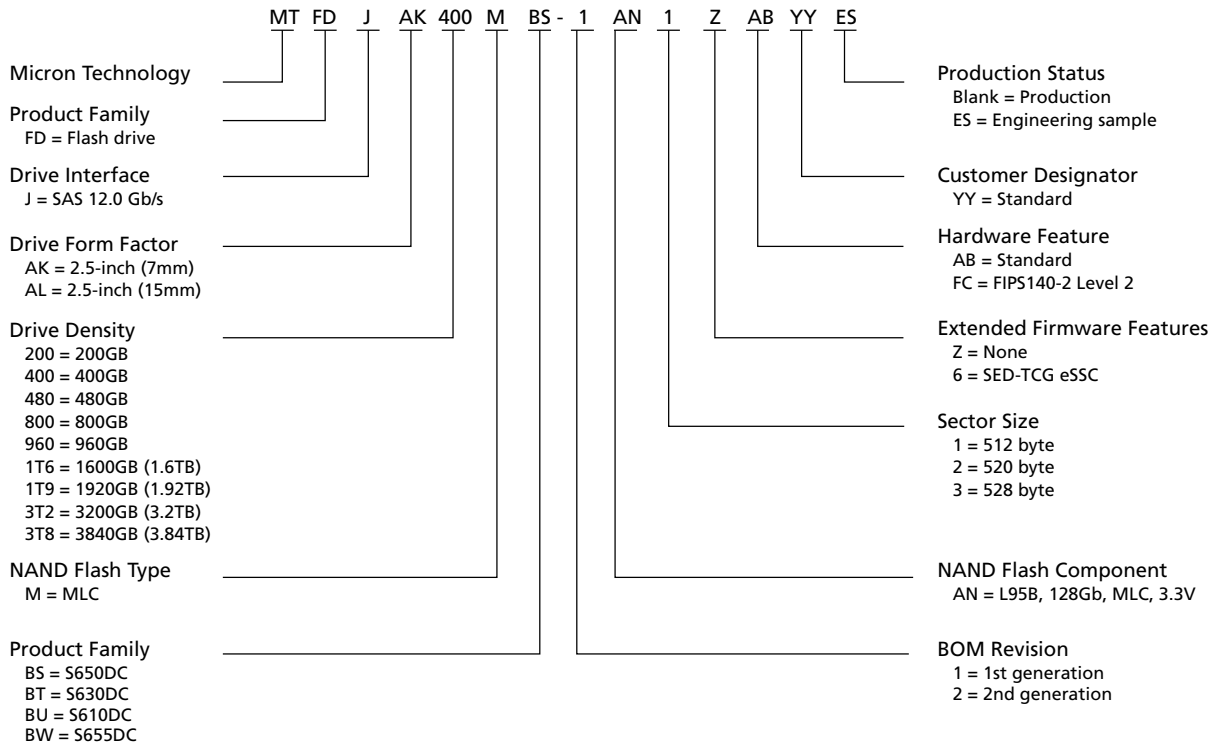



Micron Technology, Inc. reserves the right to change products or specifications without notice.
© 2015 Micron Technology, Inc. All rights reserved.

# General Description

Micron's solid state drive (SSD) uses a single-chip controller with a dual-port SAS interface on the system side and 10 channels of Micron NAND Flash internally. Packaged in an HDD replacement enclosure, the SSD integrates easily into existing storage infrastructures.

The SSD is designed to support and manage the needs of highly available, high-performance platforms that use significant read/write mixed workloads. Optimized to support enterprise needs previously supported only by single-level cell (SLC) solutions, this SSD provides endurance and data integrity required by growing environments.

## Functional Block Diagrams

**Figure 2: Functional Block Diagram – 7mm Variant (Controller Attached to NAND Directly)**

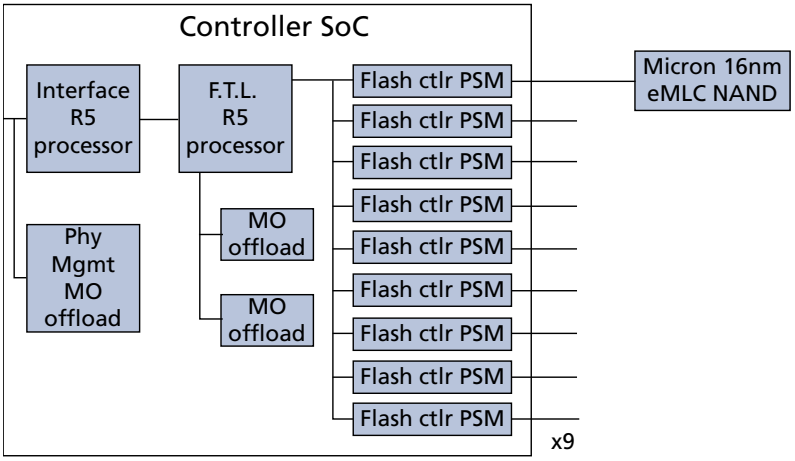


**Figure 3: Functional Block Diagram – 15mm Variant (Controller Attached to NAND by Bridge)**

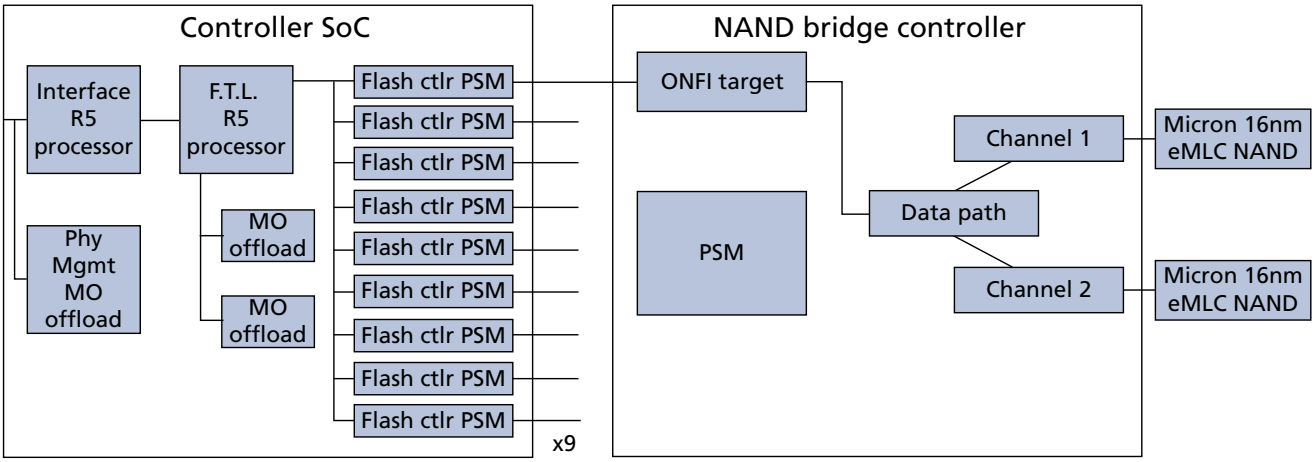



Micron Technology, Inc. reserves the right to change products or specifications without notice.
© 2015 Micron Technology, Inc. All rights reserved.

# Logical Block Address Configuration

Each device is set to report its logical block address (LBA) settings, which ensure sufficient storage per device capacity. The tables below show LBA settings according to device size.

Standard OEM models are formatted to 512 bytes per block. The block size is selectable at format time, and users with the necessary equipment can modify the data block size to capacities different than those listed below before issuing a format command. To provide a stable target capacity environment while also providing users with flexibility, Micron recommends product planning.

Micron ensures that current and future product generations will meet capacity points at certain block sizes. Planning with this in mind ensures a stable operating point with backward and forward compatibility across product generations. The current operating points for each device are shown below. The capacity stated is identical when the drive is formatted with or without PI enabled.

## Programmable Drive Capacity

Using the MODE SELECT command, users can change the drive capacity to less than its maximum value. A value of zero in the Number of Blocks field means that the MODE SELECT command will leave the drive capacity unchanged. A value greater than zero and less than the maximum number of LBAs in the Number of Blocks field means that the MODE SELECT command will change the drive capacity to the value in the Number of Blocks field. A value greater than the maximum number of LBAs means that the MODE SELECT command will round down to the maximum capacity.

**Table 2: Standard LBA Settings – 512-Byte Sector Size**

| Device and Capacity | Total LBA | | Max LBA | | User Available Bytes (Unformatted) |
|---|---|---|---|---|---|
| | Decimal | Hexidecimal | Decimal | Hexidecimal | |
| **S655DC** | | | | | |
| 200GB | 390,721,968 | 1749F1B0 | 390,721,967 | 1749F1AF | 200,049,647,616 |
| 400GB | 781,422,768 | 2E9390B0 | 781,422,767 | 2E9390AF | 400,088,457,216 |
| **S650DC** | | | | | |
| 400GB | 781,422,768 | 2E9390B0 | 781,422,767 | 2E9390AF | 400,088,457,216 |
| 800GB | 1,562,824,368 | 5D26CEB0 | 1,562,824,367 | 5D26CEAF | 800,166,076,416 |
| 1600GB | 3,125,627,568 | BA4D4AB0 | 3,125,627,567 | BA4D4AAF | 1,600,321,314,816 |
| 3200GB | 6,251,233,968 | 1749A42B0 | 6,251,233,967 | 1749A42AF | 3,200,631,791,616 |
| **S630DC** | | | | | |
| 400GB | 781,422,768 | 2E9390B0 | 781,422,767 | 2E9390AF | 400,088,457,216 |
| 480GB | 937,703,088 | 37E436B0 | 937,703,087 | 37E436AF | 480,103,981,056 |
| 800GB | 1,562,824,368 | 5D26CEB0 | 1,562,824,367 | 5D26CEAF | 800,166,076,416 |
| 960GB | 1,875,385,008 | 6FC81AB0 | 1,875,385,007 | 6FC81AAF | 960,197,124,096 |
| 1600GB | 3,125,627,568 | BA4D4AB0 | 3,125,627,567 | BA4D4AAF | 1,600,321,314,816 |
| 1920GB | 3,750,748,848 | DF8FE2B0 | 3,750,748,847 | DF8FE2AF | 1,920,383,410,176 |
| 3200GB | 6,251,233,968 | 1749A42B0 | 6,251,233,967 | 1749A42AF | 3,200,631,791,616 |


Micron Technology, Inc. reserves the right to change products or specifications without notice.
© 2015 Micron Technology, Inc. All rights reserved.

**Table 2: Standard LBA Settings – 512-Byte Sector Size (Continued)**

| Device and Capacity | Total LBA | | Max LBA | | User Available Bytes (Unformatted) |
|---|---|---|---|---|---|
| | Decimal | Hexidecimal | Decimal | Hexidecimal | |
| 3840GB | 7,501,476,528 | 1BF1F72B0 | 7,501,476,527 | 1BF1F72AF | 3,840,755,982,336 |
| **S610DC** | | | | | |
| 1920GB | 3,750,748,848 | DF8FE2B0 | 3,750,748,847 | DF8FE2AF | 1,920,383,410,176 |
| 3840GB | 7,501,476,528 | 1BF1F72B0 | 7,501,476,527 | 1BF1F72AF | 3,840,755,982,336 |

**Table 3: Standard LBA Settings – 520-Byte Sector Size**

| Device and Capacity | Total LBA | | Max LBA | | User Available Bytes (Unformatted) |
|---|---|---|---|---|---|
| | Decimal | Hexidecimal | Decimal | Hexidecimal | |
| **S655DC** | | | | | |
| 200GB | 382,435,904 | 16CB8240 | 382,435,903 | 16CB823F | 198,866,670,080 |
| 400GB | 764,871,800 | 2D970478 | 764,871,799 | 2D970477 | 397,733,336,000 |
| **S650DC** | | | | | |
| 400GB | 764,871,800 | 2D970478 | 764,871,799 | 2D970477 | 397,733,336,000 |
| 800GB | 1,529,743,600 | 5B2E08F0 | 1,529,743,599 | 5B2E08EF | 795,466,672,000 |
| 1600GB | 3,059,487,192 | B65C11D8 | 3,059,487,191 | B65C11D7 | 1,590,933,339,840 |
| 3200GB | 6,118,974,384 | 16CB823B0 | 6,118,974,383 | 16CB823AF | 3,181,866,679,680 |
| **S630DC** | | | | | |
| 400GB | 764,871,800 | 2D970478 | 764,871,799 | 2D970477 | 397,733,336,000 |
| 480GB | 917,846,160 | 36B53890 | 917,846,159 | 36B5388F | 477,280,003,200 |
| 800GB | 1,529,743,600 | 5B2E08F0 | 1,529,743,599 | 5B2E08EF | 795,466,672,000 |
| 960GB | 1,835,692,320 | 6D6A7120 | 1,835,692,319 | 6D6A711F | 954,560,006,400 |
| 1600GB | 3,059,487,192 | B65C11D8 | 3,059,487,191 | B65C11D7 | 1,590,933,339,840 |
| 1920GB | 3,671,384,640 | DAD4E240 | 3,671,384,639 | DAD4E23F | 1,909,120,012,800 |
| 3200GB | 6,118,974,384 | 16CB823B0 | 6,118,974,383 | 16CB823AF | 3,181,866,679,680 |
| 3840GB | 7,342,769,280 | 1B5A9C480 | 7,342,769,279 | 1B5A9C47F | 3,818,240,025,600 |
| **S610DC** | | | | | |
| 1920GB | 3,671,384,640 | DAD4E240 | 3,671,384,639 | DAD4E23F | 1,909,120,012,800 |
| 3840GB | 7,342,769,280 | 1B5A9C480 | 7,342,769,279 | 1B5A9C47F | 3,818,240,025,600 |


Micron Technology, Inc. reserves the right to change products or specifications without notice.
© 2015 Micron Technology, Inc. All rights reserved.

**Table 4: Standard LBA Settings – 524-Byte Sector Size**

| Device and Capacity | Total LBA | | Max LBA | | User Available Bytes (Unformatted) |
|---|---|---|---|---|---|
| | Decimal | Hexidecimal | Decimal | Hexidecimal | |
| **S655DC** | | | | | |
| 200GB | 377,338,536 | 167DBAA8 | 377,338,535 | 167DBAA7 | 197,725,392,864 |
| 400GB | 754,677,072 | 2CFB7550 | 754,677,071 | 2CFB754F | 395,450,785,728 |
| **S650DC** | | | | | |
| 400GB | 754,677,072 | 2CFB7550 | 754,677,071 | 2CFB754F | 395,450,785,728 |
| 800GB | 1,509,354,136 | 59F6EA98 | 1,509,354,135 | 59F6EA97 | 790,901,567,264 |
| 1600GB | 3,018,708,272 | B3EDD530 | 3,018,708,271 | B3EDD52F | 1,581,803,134,528 |
| 3200GB | 6,037,416,536 | 167DBAA58 | 6,037,416,535 | 167DBAA57 | 3,163,606,264,864 |
| **S630DC** | | | | | |
| 400GB | 754,677,072 | 2CFB7550 | 754,677,071 | 2CFB754F | 395,450,785,728 |
| 480GB | 905,612,480 | 35FA8CC0 | 905,612,479 | 35FA8CBF | 474,540,939,520 |
| 800GB | 1,509,354,136 | 59F6EA98 | 1,509,354,135 | 59F6EA97 | 790,901,567,264 |
| 960GB | 1,811,224,960 | 6BF51980 | 1,811,224,959 | 6BF5197F | 949,081,879,040 |
| 1600GB | 3,018,708,272 | B3EDD530 | 3,018,708,271 | B3EDD52F | 1,581,803,134,528 |
| 1920GB | 3,622,449,920 | D7EA3300 | 3,622,449,919 | D7EA32FF | 1,898,163,758,080 |
| 3200GB | 6,037,416,536 | 167DBAA58 | 6,037,416,535 | 167DBAA57 | 3,163,606,264,864 |
| 3840GB | 7,244,899,840 | 1AFD46600 | 7,244,899,839 | 1AFD465FF | 3,796,327,516,160 |
| **S610DC** | | | | | |
| 1920GB | 3,622,449,920 | D7EA3300 | 3,622,449,919 | D7EA32FF | 1,898,163,758,080 |
| 3840GB | 7,244,899,840 | 1AFD46600 | 7,244,899,839 | 1AFD465FF | 3,796,327,516,160 |

**Table 5: Standard LBA Settings – 528-Byte Sector Size**

| Device and Capacity | Total LBA | | Max LBA | | User Available Bytes (Unformatted) |
|---|---|---|---|---|---|
| | Decimal | Hexidecimal | Decimal | Hexidecimal | |
| **S655DC** | | | | | |
| 200GB | 371,916,520 | 162AFEE8 | 371,916,519 | 162AFEE7 | 196,371,922,560 |
| 400GB | 743,833,040 | 2C55FDD0 | 743,833,039 | 2C55FDCF | 392,743,845,120 |
| **S650DC** | | | | | |
| 400GB | 743,833,040 | 2C55FDD0 | 743,833,039 | 2C55FDCF | 392,743,845,120 |
| 800GB | 1,487,666,080 | 58ABFBA0 | 1,487,666,079 | 58ABFB9F | 785,487,690,240 |
| 1600GB | 3,719,165,192 | DDADF508 | 3,719,165,191 | DDADF507 | 1,963,719,221,376 |
| 3200GB | 5,950,664,304 | 162AFEE70 | 5,950,664,303 | 162AFEE6F | 3,141,950,752,512 |
| **S630DC** | | | | | |
| 400GB | 743,833,040 | 2C55FDD0 | 743,833,039 | 2C55FDCF | 392,743,845,120 |


Micron Technology, Inc. reserves the right to change products or specifications without notice.
© 2015 Micron Technology, Inc. All rights reserved.

**Table 5: Standard LBA Settings – 528-Byte Sector Size (Continued)**

| Device and Capacity | Total LBA | | Max LBA | | User Available Bytes (Unformatted) |
|---|---|---|---|---|---|
| | Decimal | Hexidecimal | Decimal | Hexidecimal | |
| 480GB | 892,599,648 | 3533FD60 | 892,599,647 | 3533FD5F | 471,292,614,144 |
| 800GB | 1,487,666,080 | 58ABFBA0 | 1,487,666,079 | 58ABFB9F | 785,487,690,240 |
| 960GB | 1,785,199,296 | 6A67FAC0 | 1,785,199,295 | 6A67FABF | 942,585,228,288 |
| 1600GB | 3,719,165,192 | DDADF508 | 3,719,165,191 | DDADF507 | 1,963,719,221,376 |
| 1920GB | 3,570,398,592 | D4CFF580 | 3,570,398,591 | D4CFF57F | 1,885,170,456,576 |
| 3200GB | 5,950,664,304 | 162AFEE70 | 5,950,664,303 | 162AFEE6F | 3,141,950,752,512 |
| 3840GB | 7,140,797,184 | 1A99FEB00 | 7,140,797,183 | 1A99FEAFF | 3,770,340,913,152 |
| **S610DC** | | | | | |
| 1920GB | 3,570,398,592 | D4CFF580 | 3,570,398,591 | D4CFF57F | 1,885,170,456,576 |
| 3840GB | 7,140,797,184 | 1A99FEB00 | 7,140,797,183 | 1A99FEAFF | 3,770,340,913,152 |

**Table 6: Standard LBA Settings – 4096-Byte Sector Size**

| Device and Capacity | Total LBA | | Max LBA | | User Available Bytes (Unformatted) |
|---|---|---|---|---|---|
| | Decimal | Hexidecimal | Decimal | Hexidecimal | |
| **S655DC** | | | | | |
| 200GB | 48,840,246 | 2E93E36 | 48,840,245 | 2E93E35 | 200,049,647,616 |
| 400GB | 97,677,846 | 5D27216 | 97,677,845 | 5D27215 | 400,088,457,216 |
| **S650DC** | | | | | |
| 400GB | 97,677,846 | 5D27216 | 97,677,845 | 5D27215 | 400,088,457,216 |
| 800GB | 195,353,046 | BA4D9D6 | 195,353,045 | BA4D9D5 | 800,166,076,416 |
| 1600GB | 390,703,446 | 1749A956 | 390,703,445 | 1749A955 | 1,600,321,314,816 |
| 3200GB | 781,404,246 | 2E934856 | 781,404,245 | 2E934855 | 3,200,631,791,616 |
| **S630DC** | | | | | |
| 400GB | 97,677,846 | 5D27216 | 97,677,845 | 5D27215 | 400,088,457,216 |
| 480GB | 117,212,886 | 6FC86D6 | 117,212,885 | 6FC86D5 | 480,103,981,056 |
| 800GB | 195,353,046 | BA4D9D6 | 195,353,045 | BA4D9D5 | 800,166,076,416 |
| 960GB | 234,423,126 | DF90356 | 234,423,125 | DF90355 | 960,197,124,096 |
| 1600GB | 390,703,446 | 1749A956 | 390,703,445 | 1749A955 | 1,600,321,314,816 |
| 1920GB | 468,843,606 | 1BF1FC56 | 468,843,605 | 1BF1FC55 | 1,920,383,410,176 |
| 3200GB | 781,404,246 | 2E934856 | 781,404,245 | 2E934855 | 3,200,631,791,616 |
| 3840GB | 937,684,566 | 37E3EE56 | 937,684,565 | 37E3EE55 | 3,840,755,982,336 |
| **S610DC** | | | | | |
| 1920GB | 468,843,606 | 1BF1FC56 | 468,843,605 | 1BF1FC55 | 1,920,383,410,176 |
| 3840GB | 937,684,566 | 37E3EE56 | 937,684,565 | 37E3EE55 | 3,840,755,982,336 |


Micron Technology, Inc. reserves the right to change products or specifications without notice.
© 2015 Micron Technology, Inc. All rights reserved.

**Table 7: Standard LBA Settings – 4160-Byte Sector Size**

| Device and Capacity | Total LBA | | Max LBA | | User Available Bytes (Unformatted) |
|---|---|---|---|---|---|
| | Decimal | Hexidecimal | Decimal | Hexidecimal | |
| **S655DC** | | | | | |
| 200GB | 47,884,616 | 2DAA948 | 47,884,615 | 2DAA947 | 199,200,002,560 |
| 400GB | 95,769,232 | 5B55290 | 95,769,231 | 5B5528F | 398,400,005,120 |
| **S650DC** | | | | | |
| 400GB | 95,769,232 | 5B55290 | 95,769,231 | 5B5528F | 398,400,005,120 |
| 800GB | 191,538,464 | B6AA520 | 191,538,463 | B6AA51F | 796,800,010,240 |
| 1600GB | 383,076,928 | 16D54A40 | 383,076,927 | 16D54A3F | 1,593,600,020,480 |
| 3200GB | 766,153,848 | 2DAA9478 | 766,153,847 | 2DAA9477 | 3,187,200,007,680 |
| **S630DC** | | | | | |
| 400GB | 95,769,232 | 5B55290 | 95,769,231 | 5B5528F | 398,400,005,120 |
| 480GB | 114,923,080 | 6D99648 | 114,923,079 | 6D99647 | 478,080,012,800 |
| 800GB | 191,538,464 | B6AA520 | 191,538,463 | B6AA51F | 796,800,010,240 |
| 960GB | 229,846,160 | DB32C90 | 229,846,159 | DB32C8F | 956,160,025,600 |
| 1600GB | 383,076,928 | 16D54A40 | 383,076,927 | 16D54A3F | 1,593,600,020,480 |
| 1920GB | 459,692,312 | 1B665918 | 459,692,311 | 1B665917 | 1,912,320,017,920 |
| 3200GB | 766,153,848 | 2DAA9478 | 766,153,847 | 2DAA9477 | 3,187,200,007,680 |
| 3840GB | 919,384,616 | 36CCB228 | 919,384,615 | 36CCB227 | 3,824,640,002,560 |
| **S610DC** | | | | | |
| 1920GB | 459,692,312 | 1B665918 | 459,692,311 | 1B665917 | 1,912,320,017,920 |
| 3840GB | 919,384,616 | 36CCB228 | 919,384,615 | 36CCB227 | 3,824,640,002,560 |

**Table 8: Standard LBA Settings – 4192-Byte Sector Size**

| Device and Capacity | Total LBA | | Max LBA | | User Available Bytes (Unformatted) |
|---|---|---|---|---|---|
| | Decimal | Hexidecimal | Decimal | Hexidecimal | |
| **S655DC** | | | | | |
| 200GB | 47,280,536 | 2D17198 | 47,280,535 | 2D17197 | 198,200,006,912 |
| 400GB | 94,561,072 | 5A2E330 | 94,561,071 | 5A2E32F | 396,400,013,824 |
| **S650DC** | | | | | |
| 400GB | 94,561,072 | 5A2E330 | 94,561,071 | 5A2E32F | 396,400,013,824 |
| 800GB | 189,122,144 | B45C660 | 189,122,143 | B45C65F | 792,800,027,648 |
| 1600GB | 378,244,280 | 168B8CB8 | 378,244,279 | 168B8CB7 | 1,585,600,021,760 |
| 3200GB | 756,488,552 | 2D171968 | 756,488,551 | 2D171967 | 3,171,200,009,984 |
| **S630DC** | | | | | |
| 400GB | 94,561,072 | 5A2E330 | 94,561,071 | 5A2E32F | 396,400,013,824 |
| 480GB | 113,473,288 | 6C37708 | 113,473,287 | 6C37707 | 475,680,023,296 |


Micron Technology, Inc. reserves the right to change products or specifications without notice.
© 2015 Micron Technology, Inc. All rights reserved.

**Table 8: Standard LBA Settings – 4192-Byte Sector Size (Continued)**

| Device and Capacity | Total LBA | | Max LBA | | User Available Bytes (Unformatted) |
|---|---|---|---|---|---|
| | Decimal | Hexidecimal | Decimal | Hexidecimal | |
| 800GB | 189,122,144 | B45C660 | 189,122,143 | B45C65F | 792,800,027,648 |
| 960GB | 226,946,568 | D86EE08 | 226,946,567 | D86EE07 | 951,360,013,056 |
| 1600GB | 378,244,280 | 168B8CB8 | 378,244,279 | 168B8CB7 | 1,585,600,021,760 |
| 1920GB | 453,893,136 | 1B0DDC10 | 453,893,135 | 1B0DDC0F | 1,902,720,026,112 |
| 3200GB | 756,488,552 | 2D171968 | 756,488,551 | 2D171967 | 3,171,200,009,984 |
| 3840GB | 907,786,264 | 361BB818 | 907,786,263 | 361BB817 | 3,805,440,018,688 |
| **S610DC** | | | | | |
| 1920GB | 453,893,136 | 1B0DDC10 | 453,893,135 | 1B0DDC0F | 1,902,720,026,112 |
| 3840GB | 907,786,264 | 361BB818 | 907,786,263 | 361BB817 | 3,805,440,018,688 |

**Table 9: Standard LBA Settings – 4224-Byte Sector Size**

| Device and Capacity | Total LBA | | Max LBA | | User Available Bytes (Unformatted) |
|---|---|---|---|---|---|
| | Decimal | Hexidecimal | Decimal | Hexidecimal | |
| **S655DC** | | | | | |
| 200GB | 46,922,352 | 2CBFA70 | 46,922,351 | 2CBFA6F | 198,200,014,848 |
| 400GB | 93,844,704 | 597F4E0 | 93,844,703 | 597F4DF | 396,400,029,696 |
| **S650DC** | | | | | |
| 400GB | 93,844,704 | 597F4E0 | 93,844,703 | 597F4DF | 396,400,029,696 |
| 800GB | 187,689,400 | B2FE9B8 | 187,689,399 | B2FE9B7 | 792,800,025,600 |
| 1600GB | 375,378,792 | 165FD368 | 375,378,791 | 165FD367 | 1,585,600,017,408 |
| 3200GB | 750,757,576 | 2CBFA6C8 | 750,757,575 | 2CBFA6C7 | 3,171,200,001,024 |
| **S630DC** | | | | | |
| 400GB | 93,844,704 | 597F4E0 | 93,844,703 | 597F4DF | 396,400,029,696 |
| 480GB | 112,613,640 | 6B65908 | 112,613,639 | 6B65907 | 475,680,015,360 |
| 800GB | 187,689,400 | B2FE9B8 | 187,689,399 | B2FE9B7 | 792,800,025,600 |
| 960GB | 225,227,280 | D6CB210 | 225,227,279 | D6CB20F | 951,360,030,720 |
| 1600GB | 750,757,576 | 2CBFA6C8 | 750,757,575 | 2CBFA6C7 | 3,171,200,001,024 |
| 1920GB | 450,454,552 | 1AD96418 | 450,454,551 | 1AD96417 | 1,902,720,027,648 |
| 3200GB | 757,725,329 | 2D29F891 | 757,725,328 | 2D29F890 | 3,200,631,791,616 |
| 3840GB | 900,909,096 | 35B2C828 | 900,909,095 | 35B2C827 | 3,805,440,021,504 |
| **S610DC** | | | | | |
| 1920GB | 450,454,552 | 1AD96418 | 450,454,551 | 1AD96417 | 1,902,720,027,648 |
| 3840GB | 900,909,096 | 35B2C828 | 900,909,095 | 35B2C827 | 3,805,440,021,504 |


Micron Technology, Inc. reserves the right to change products or specifications without notice.
© 2015 Micron Technology, Inc. All rights reserved.

# Physical Configuration

## Dimensions and Weight

| Form factor | Capacity (GB) | Height (mm) | Width (mm) | Length (mm) | Weight (grams) |
|---|---|---|---|---|---|
| 2.5-inch | 200/400/480/800/960 | 7.00 +0.20/–0.50 | 69.85 ±0.25 | 100.24 ±0.21 | TBD |
| | 1600/1920/3200/3840 | 15.00 +0.00/–0.50 | | | |

## Dual Port Support

Micron's 600 Series SAS SSD drives have two independent ports, which can be connected in the same or different SCSI domains. Each drive port has a unique SAS address.

The two ports are capable of independent port clocking. For example, both ports can run at 12 Gb/s, or the first port can run at 12 Gb/s while the second runs at 6 Gb/s. Supported link rates are 3.0, 6.0, or 12.0 Gb/s.

Subject to buffer availability, SSD drives support the following:

- Concurrent port transfers: Supports receiving COMMAND and TASK management transfers on both ports simultaneously
- Full duplex transfers: Supports sending XFER_RDY, DATA, and RESPONSE transfers while receiving frames on both ports

## Interface Connectors

The SAS signal segment interface cable has four transmission conductors and three ground conductors for each channel. As shown in the figure below, the cable includes two 7-pin signal segments (primary and secondary) and a 15-pin power segment arranged in a single row with a 1.27mm (0.050 inch) pitch.

SAS drives use the device connector for the following:

- DC power
- SAS interface (dual port)
- Activity LED (DAS)

**Figure 4: SSD Interface Connections**

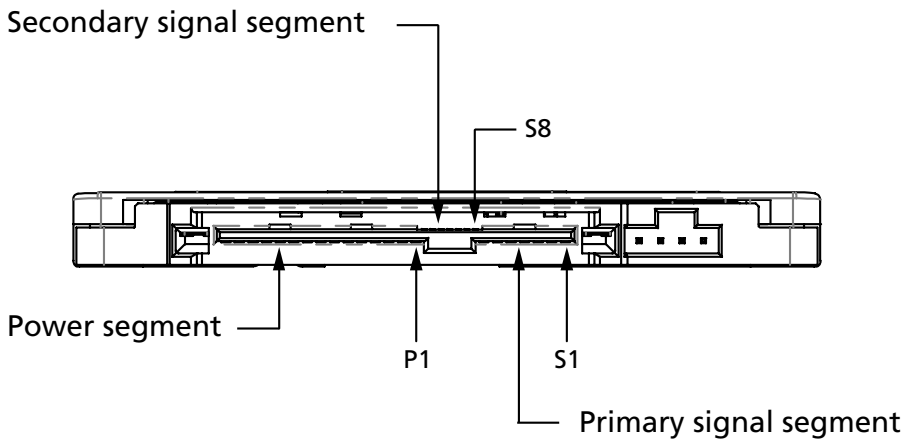



Micron Technology, Inc. reserves the right to change products or specifications without notice.
© 2015 Micron Technology, Inc. All rights reserved.

## Pin Assignments

### Table 10: Primary SAS Signal Segment Pin Assignments

| Signal Name | Type | Description |
|---|---|---|
| S1 | GND | Second mate to ground |
| S2 | RX0+ | Positive (RX0 from target); short pin to support hot plugging |
| S3 | RX0– | Negative (RX0 from target); short pin to support hot plugging |
| S4 | GND | Second mate to ground |
| S5 | TX0– | Negative (TX0 to target); short pin to support hot plugging |
| S6 | TX0+ | Positive (TX0 to target); short pin to support hot plugging |
| S7 | GND | Second mate to ground |

### Table 11: Secondary SAS Signal Segment Pin Assignments – Back Side

| Signal Name | Type | Description |
|---|---|---|
| S8 | GND | Second mate to ground |
| S9 | RX1+ | Positive (RX1 from target); short pin to support hot plugging |
| S10 | RX1– | Negative (RX1 from target); short pin to support hot plugging |
| S11 | GND | Second mate to ground |
| S12 | TX1– | Negative (TX1 to target); short pin to support hot plugging |
| S13 | TX1+ | Positive (TX1 to target); short pin to support hot plugging |
| S14 | GND | Second mate to ground |


Micron Technology, Inc. reserves the right to change products or specifications without notice.
© 2015 Micron Technology, Inc. All rights reserved.

**Table 12: SAS Power Segment Pin Assignments**

| Signal Name | Type | Description |
|---|---|---|
| P1 | V3.3 | Reserved; short pin to support hot plugging; behind a SAS drive plug connector, P1 and P2 are connected only to each other. |
| P2 | V3.3 | Reserved; short pin to support hot plugging; behind a SAS drive plug connector, P1 and P2 are connected only to each other. |
| P3 | V3.3 | SAS power disable. |
| P4 | GND | Ground |
| P5 | GND | Ground |
| P6 | GND | Ground |
| P7 | V5 | 5V power (charge) |
| P8 | V5 | 5V power; short pin to support hot plugging. |
| P9 | V5 | 5V power; short pin to support hot plugging. |
| P10 | GND | Ground |
| P11 | DAS | Ready/Drive activity LED; short pin to support hot plugging. |
| P12 | GND | Ground |
| P13 | V12 | 12V power (charge) |
| P14 | V12 | 12V power; short pin to support hot plugging. |
| P15 | V12 | 12V power; short pin to support hot plugging. |


Micron Technology, Inc. reserves the right to change products or specifications without notice.
© 2015 Micron Technology, Inc. All rights reserved.

# SAS Features

## Task Management

### Table 13: Task Management Functions

| Task Name | Supported |
|---|---|
| Abort task | Y |
| Abort task set | Y |
| Clear ACA | Y |
| Clear task set | Y |
| I_T nexus reset | Y |
| Logical unit nexus reset | Y |
| Query task | Y |
| Query task set | Y |
| Query asynchronous event | Y |

## Task Management Responses

### Table 14: SAS Response to Task Management Functions

| Function Name | Response Code |
|---|---|
| Function complete | 0 |
| Invalid frame | 2 |
| Function not supported | 4 |
| Function failed | 5 |
| Function succeeded | 8 |
| Invalid logical unit | 9 |

## Thin Provisioning

The device supports thin provisioning and the READ CAPACITY 16 (9Eh) command, but the level of thin provisioning support varies by product model. Thin provisioning returns a default data pattern from a READ command to a logical block even when that block is not mapped to a physical block by a previous WRITE command.

To determine whether thin provisioning is supported and which of its features are implemented, a READ CAPACITY 16 (9Eh) command must be issued to the drive. The LBPME (logical block provisioning management enabled) bit settings indicate whether the logical unit implements LBPM (logical block provisioning management). The LBPME and LBPRZ (logical block provisioning read zeros) bit settings are shown in the table immediately below.


Micron Technology, Inc. reserves the right to change products or specifications without notice.
© 2015 Micron Technology, Inc. All rights reserved.

**Table 15: Product Configuration and Bit Settings**

| Bit | Product Configuration | | Bit Settings | Description |
|---|---|---|---|---|
| | SED Support | Non-SED Support | | |
| LBPME | Y | Y | LBPME = 1 (Logical unit is thin provisioned) | LBPM is implemented. |
| | | | LBPME = 0 (Logical unit is fully provisioned) | LBPM is not implemented. |
| LBPRZ | N | Y | LBPRZ = 1 | For an unmapped LBA specified by a READ operation, the device server sends to the data-in buffer user data with all bits set to 0. |
| | | | LBPRZ = 0 | For an unmapped LBA specified by a READ operation, the device server sends to the data-in buffer user data with all bits set to any value. |

## UNMAP Command

The UNMAP command requests that the device server break the association of a specific LBA from a physical block, thereby freeing up the physical block from use and no longer requiring it to contain user data. An unmapped block will respond to a READ command with data that is determined by the setting of the LBPRZ bit in the read capacity parameter data.

## Protection Information (PI) and Security (SED)

Requirements in this section apply to any device that supports LBA unmapping. In a SCSI device, an umapped LBA is defined as part of the thin provisioning model, whose support is indicated by an LBPME bit value of 1 in the read capacity parameter data.

When a cryptographic ERASE command erases a region of LBAs, the drive unmaps those LBAs. And when the host attempts to access an unmapped or trimmed LBA, the drive returns scrambled data.

For a given LBA, data is identical from access to access until it is either updated from the host or is cryptographically erased. Then the drive reports an LBPRZ bit value of 0 in the read capacity parameter data

When the host attempts access to an unmapped LBA on a drive that has been formatted with protection information (PI), the drive returns scrambled PI data for that LBA.

Depending on the value of the RDPROTECT field in the data-access command CDB, the drive might return a standard PI error to the host. When a host reduces a drive's addressable capacity via a MODE SELECT command, the drive unmaps or trims any LBA within the inaccessible region of the device. Additionally, an UNMAP command is not permitted on a locked band. PI and SED drive configuration information is shown below.


Micron Technology, Inc. reserves the right to change products or specifications without notice.
© 2015 Micron Technology, Inc. All rights reserved.

**Table 16: PI and SED**

| PI and SED Bit Definition | Drive Configuration | | | | | |
|---|---|---|---|---|---|---|
| | Standard (Non-SED) | | | SED | | |
| PI setting | Disabled | Enabled | | Disabled | Enabled | |
| PROT_EN bit | 0 | 1 | | 0 | 1 | |
| LBPME bit | 1 | 1 | | 1 | 1 | |
| LBPRZ bit | 1 | 1 | | 0 | 0 | |
| PI check requested | NA | Yes | No | NA | Yes | No |
| DATA returned for thin provisioned LBA | 0x00 | 0x00 | 0x00 | Random | None | Random |
| PI returned for thin provisioned LBA | None | 0xFF | 0xFF | None | None | Scrambled PI data |
| PI check performed | NA | No | No | NA | Yes | No |
| Error reported to host | No | No | No | None | Yes | No |


Micron Technology, Inc. reserves the right to change products or specifications without notice.
© 2015 Micron Technology, Inc. All rights reserved.

# Format Unit

The device may be formatted either as a thin provisioned device or a fully provisioned device. Thin provisioned is the default format and is recommended for most applications. Thin provisioning provides the most flexibility for the device to manage the Flash medium to maximize endurance.

**Table 17: Format Unit Command Execution Times for 512-Byte LBAs**

| Format Mode | DCRT Bit | IP Bit | All S600DC Series Devices (Capacity in GB) | | | | | | | | | Unit |
|---|---|---|---|---|---|---|---|---|---|---|---|---|
| | | | 200 | 400 | 480 | 800 | 960 | 1600 | 1920 | 3200 | 3840 | |
| **Non-SED Configuration** | | | | | | | | | | | | |
| Thin provisioned (Default) | 0 | 0 | 5 | 5 | 5 | 5 | 5 | 5 | 5 | 5 | 5 | minutes |
| Thin provisioned (Default) | 1 | 0 | 5 | 5 | 5 | 5 | 5 | 5 | 5 | 5 | 5 | |
| Fully provisioned | 0 | 1 | 10 | 10 | 10 | 10 | 10 | 10 | 10 | 10 | 10 | |
| Fully provisioned | 1 | 1 | 10 | 10 | 10 | 10 | 10 | 10 | 10 | 10 | 10 | |
| **SED Configuration** | | | | | | | | | | | | |
| Thin provisioned (Default) | 0 | 0 | 5 | 5 | 5 | 5 | 5 | 5 | 5 | 5 | 5 | minutes |
| Thin provisioned (Default) | 1 | 0 | 5 | 5 | 5 | 5 | 5 | 5 | 5 | 5 | 5 | |
| Fully provisioned | 0 | 1 | 430 | 430 | 430 | 430 | 430 | 430 | 430 | 430 | 430 | |
| Fully provisioned | 1 | 1 | 280 | 280 | 280 | 280 | 280 | 280 | 280 | 280 | 280 | |


Micron Technology, Inc. reserves the right to change products or specifications without notice.
© 2015 Micron Technology, Inc. All rights reserved.

# Commands

**Table 18: SAS Command Set and Additional Supported Bits – SED and Non-SED**

| Command | Op-Code (Hex) | Sub-Command/ Functional Bit | Description | Supported |
|---|---|---|---|---|
| CHANGE DEFINITION | 40 | – | – | No |
| FORMAT UNIT | 04 | – | – | Yes |
| | | DPRY bit | – | No |
| | | DCRT bit | – | Yes |
| | | STFP bit | – | Yes |
| | | IP bit | – | Yes |
| | | DSP bit | – | Yes |
| | | IMMED bit | – | Yes |
| | | VS | Vendor specific | No |
| INQUIRY (12) | 12 | – | – | Yes |
| | | B0h | Block limits page | Yes |
| | | B1h | Block device characteristics | Yes |
| | | C1h | Date code page | Yes |
| | | C3h | Device behavior page | Yes |
| | | 83h | Device identification page | Yes |
| | | 86h | Extended inquiry data page | Yes |
| | | C0h | Firmware numbers page | Yes |
| | | C2h | Jumper setting page | No |
| | | 8Ah | Power condition page | Yes |
| | | 8Dh | Power consumption page | Yes |
| | | 00h | Supported vital product data page | Yes |
| | | B2h | Thin provisioning page | Yes |
| | | 80h | Unit serial number page | Yes |
| | | D1h | Vendor unique page | Yes |
| | | D2h | Vendor unique page | Yes |
| LOG SELECT (10) | 4C | – | – | Yes |
| | | PCR bit | – | Yes |
| | | DU bit | – | No |
| | | DS bit | – | Yes |
| | | TSD bit | – | Yes |
| | | ETC bit | – | No |
| | | TMC bit | – | No |
| | | LP bit | – | No |


Micron Technology, Inc. reserves the right to change products or specifications without notice.
© 2015 Micron Technology, Inc. All rights reserved.

**Table 18: SAS Command Set and Additional Supported Bits – SED and Non-SED (Continued)**

| Command | Op-Code (Hex) | Sub-Command/ Functional Bit | Description | Supported |
|---|---|---|---|---|
| LOG SENSE (10) | 4D | – | – | Yes |
| | | 0Fh | Application client log page | Yes |
| | | 15h | Background scan results log page | Yes |
| | | 01h | Buffer over-run/under-run page | No |
| | | 37h | Cache statistics page | Yes |
| | | 3Eh | Factory log page | Yes |
| | | 2Fh | Information exceptions log page | Yes |
| | | 0Bh | Last n deferred errors or async events page | No |
| | | 07h | Last n error events page | No |
| | | 06h | Non-medium error page | Yes |
| | | 00h | Page support list | Yes |
| | | 1Ah | Power conditions transitions page | Yes |
| | | 18h | Protocol-specific port log page | Yes |
| | | 03h | Read error counter page | Yes |
| | | 04h | Read reverse error counter page | No |
| | | 10h | Self-test results page | Yes |
| | | 11h | Solid state media log page | Yes |
| | | 0Eh | Start-stop cycle counter page | Yes |
| | | 0Dh | Temperature page | Yes |
| | | 38h | Vendor unique page | Yes |
| | | 3Ch | Vendor unique page | Yes |
| | | 05h | Verify error counter page | Yes |
| | | 02h | Write error counter page | Yes |


Micron Technology, Inc. reserves the right to change products or specifications without notice.
© 2015 Micron Technology, Inc. All rights reserved.

**Table 18: SAS Command Set and Additional Supported Bits – SED and Non-SED (Continued)**

| Command | Op-Code (Hex) | Sub-Command/ Functional Bit | Description | Supported |
|---|---|---|---|---|
| MODE SELECT (6)<br>MODE SELECT (10)<br>MODE SENSE (6)<br>MODE SENSE (10) | 15<br>55<br>1A<br>5A | – | – | Yes |
| | | 08h | Caching parameters page | Yes |
| | | 0Ah | Control mode page | Yes |
| | | 02h | Disconnect/reconnect page | Yes |
| | | 01h | Error recovery page | Yes |
| | | 03h | Format page | No |
| | | 1Ch | Information exceptions control page | Yes |
| | | 1Ch/01h | Background scan mode subpage | Yes |
| | | 18h | Protocol-specific LUN mode page | Yes |
| | | 19h | Protocol-specific port page | Yes |
| | | 19h/01h | Physical control and discover subpage | Yes |
| | | 19h/03h | Enhanced physical control sub-page | Yes |
| | | 1Ah | Power condition page | Yes |
| | | 00h | Unit attention page | Yes |
| | | 07h | Verify error recovery page | Yes |
| | | 10h | XOR control page | No |
| PERSISTENT RESERVE IN | 5E | – | – | Yes |
| | | – | – | Yes |
| | | 00h | Read keys | Yes |
| | | 01h | Read reservations | Yes |
| | | 02h | Read capabilities | Yes |
| PERSISTENT RESERVE OUT | 5F | – | – | Yes |
| | | 03h | Clear | Yes |
| | | 04h | Preempt | Yes |
| | | 05h | Preempt and abort | Yes |
| | | 00h | Register | Yes |
| | | 06h | Register and ignore existing keys | Yes |
| | | 07h | Register and move | Yes |
| | | 02h | Release | Yes |
| | | 08h | Replace lost reservation | Yes |
| | | 01h | Reserve | Yes |
| READ (6) | 08 | – | – | Yes |
| READ (10) | 28 | – | – | Yes |
| | | DPO bit supported | – | Yes |
| | | FUA bit supported | – | Yes |


Micron Technology, Inc. reserves the right to change products or specifications without notice.
© 2015 Micron Technology, Inc. All rights reserved.

**Table 18: SAS Command Set and Additional Supported Bits – SED and Non-SED (Continued)**

| Command | Op-Code (Hex) | Sub-Command/ Functional Bit | Description | Supported |
|---|---|---|---|---|
| Read (12) | A8 | – | – | No |
| READ (16) | 88 | – | – | Yes |
| READ (32) | 7F/0009 | – | – | Yes |
| READ BUFFER (Mode 0, 2, 3, A, and B) | 3C | 1Ch | Error history | Yes |
| READ CAPACITY (10) | 25 | – | – | Yes |
| READ CAPACITY (16) | 9E/10 | – | – | Yes |
| READ DEFECT DATA (10) | 37 | – | – | Yes |
| READ DEFECT DATA (12) | B7 | – | – | Yes |
| REASSIGN BLOCKS | 07 | – | – | Yes |
| RECEIVE DIAGNOSTIC RESULTS | 1C | – | – | Yes |
| | | 00h | Supported diagnostic pages | Yes |
| | | 40h | Translate page | No |
| RELEASE (6) | 17 | – | – | Yes |
| RELEASE (10) | 57 | – | – | Yes |
| REPORT IDENTIFYING INFORMATION | A3 | 05h | – | Yes |
| REPORT LUNS | A0 | – | – | Yes |
| REPORT SUPPORTED OPERATIONS CODES | A3 | 0Ch | – | Yes |
| REPORT SUPPORTED TASK MANAGEMENT FUNCTIONS | | 0Dh | – | Yes |
| REQUEST SENSE | 03 | – | – | Yes |
| | | – | Actual retry count bytes | Yes |
| | | – | Extended sense | Yes |
| | | – | Field pointer bytes | Yes |
| RESERVE (6) | 16 | – | – | Yes |
| | | – | 3rd party reserve | Yes |
| | | – | Extent reservation | No |
| RESERVE (10) | 56 | – | – | Yes |
| | | – | 3rd party reserve | Yes |
| | | – | Extent reservation | No |
| REZERO UNIT | 01 | – | – | Yes |
| SANITIZE | 48 | – | – | Yes |
| | | 01h | Overwrite | Yes |
| | | 02h | Block erase | Yes |
| | | 1Fh | Exit failure mode | Yes |
| SEEK (6) | 0B | – | – | Yes |


Micron Technology, Inc. reserves the right to change products or specifications without notice.
© 2015 Micron Technology, Inc. All rights reserved.

**Table 18: SAS Command Set and Additional Supported Bits – SED and Non-SED (Continued)**

| Command | Op-Code (Hex) | Sub-Command/ Functional Bit | Description | Supported |
|---|---|---|---|---|
| SEEK (10) | 2B | – | – | Yes |
| SEND DIAGNOSTIC | 1D | – | – | Yes |
| | | 00h | Supported diagnostic pages | Yes |
| | | 40h | Translate page | No |
| SET IDENTIFYING INFORMATION | A4 | 06h | – | Yes |
| SET TIMESTAMP | | 0Fh | – | Yes |
| START / STOP UNIT | 1B | – | – | Yes |
| SYNCHRONIZE CACHE (10) | 35 | – | – | Yes |
| SYNCHRONIZE CACHE (16) | 91 | – | – | Yes |
| TEST UNIT READY | 00 | – | – | Yes |
| UNMAP | 42 | – | – | Yes |
| VERIFY (10) | 2F | – | – | Yes |
| | | BTYCHK bit | – | Yes |
| VERIFY (12) | AF | – | – | No |
| VERIFY (16) | 8F | – | – | Yes |
| VERIFY (32) | 7F/000A | – | – | Yes |
| WRITE (6) | 0A | – | – | Yes |
| WRITE (10) | 2A | – | – | Yes |
| | | DPO bit supported | – | Yes |
| | | FUA bit supported | | Yes |
| WRITE (12) | AA | – | – | No |
| WRITE (16) | 8A | – | – | Yes |
| WRITE (32) | 7F/0008 | – | – | Yes |
| WRITE AND VERIFY (10) | 2E | – | – | Yes |
| | | DPO bit supported | – | Yes |
| WRITE AND VERIFY (12) | AE | – | – | No |
| WRITE AND VERIFY (16) | 8E | – | – | Yes |
| WRITE AND VERIFY (32) | 7F/000C | – | – | Yes |
| WRITE BUFFER (Modes 0 and 2 Supported) | 3B | 1Ch | Download application log | Yes |
| WRITE LONG (10) | 3F | – | – | Yes |
| WRITE LONG (16) | 9F/11 | – | – | Yes |
| WRITE SAME (10) | 41 | – | – | Yes |
| | | Pbdata | – | No |
| | | Lbdata | – | No |
| WRITE SAME (16) | 93 | – | – | Yes |
| WRITE SAME (32) | 7F/000D | – | – | Yes |
| XDREAD | 52 | – | – | No |


Micron Technology, Inc. reserves the right to change products or specifications without notice.
© 2015 Micron Technology, Inc. All rights reserved.

**Table 18: SAS Command Set and Additional Supported Bits – SED and Non-SED (Continued)**

| Command | Op-Code (Hex) | Sub-Command/ Functional Bit | Description | Supported |
|---|---|---|---|---|
| XDWRITE | 50 | – | – | No |
| XPWRITE | 51 | – | – | No |

**Table 19: SAS Command Set and Additional Supported Bits – SED Only**

| Command | Op-Code (Hex) | Sub-Command/ Functional Bit | Description | Supported |
|---|---|---|---|---|
| SANITIZE | 48 | – | Cryptographic erase | Yes |
| | | 03h | | |
| SECURITY PROTOCOL IN | A2 | – | – | Yes |
| SECURITY PROTOCOL OUT | B5 | – | – | Yes |
| WRITE BUFFER (Modes 0 and 2 Supported) | 3B | Modes 4, 5, and 7 | Firmware download option | Yes |

**Table 20: SAS Command Set and Additional Supported Bits – Non-SED Only**

| Command | Op-Code (Hex) | Sub-Command/ Functional Bit | Description | Supported |
|---|---|---|---|---|
| READ BUFFER (Mode 0, 2, 3, A, and B) | 3C | – | – | Yes |
| READ LONG (10) | 3E | – | – | Yes |
| READ LONG (16) | 9E/11 | – | – | Yes |
| WRITE BUFFER (Modes 0 and 2 Supported) | 3B | – | Firmware download option | Yes |
| | | Modes 5, 7, Ah, and Bh | | |


Micron Technology, Inc. reserves the right to change products or specifications without notice.
© 2015 Micron Technology, Inc. All rights reserved.

# Mode, Log, and VPD Pages

### Table 21: Supported Mode Pages

| Mode Page Code | Sub-Page Code | Mode Page Name |
|---|---|---|
| 01h | – | Read-Write error recovery |
| 02h | – | Disconnect-reconnect |
| 07h | – | Verify error recovery |
| 08h | – | Caching |
| 0Ah | – | Control |
| 19h | – | Protocol specific port |
| 1Ah | 01h | Power consumption |
| 1Ch | – | Informational exceptions control |

### Table 22: Supported Log and VPD Pages (Log Sense – 4Dh Command)

| Log Page Code (Hex) | Log Page Name |
|---|---|
| 0F | Application client log page |
| 15 | Background scan results log page |
| 01 | Buffer over-run/under-run page |
| 37 | Cache statistics page |
| 3E | Factory log page |
| 2F | Information exceptions log page |
| 0B | Last n differed errors or async event page |
| 07 | Last n error events page (07h) |
| 06 | Non-medium error page |
| 00 | Page support list |
| 1A | Power conditions transitions page |
| 18 | Protocol-specific port log page |
| 03 | Read error counter page |
| 04 | Read reverse error counter page |
| 10 | Selt-test results page |
| 11 | Solid state media log page |
| 0E | Start-stop cycle counter page |
| 0D | Temperature page |
| 38 | Vendor unique page |
| 3C | Vendor unique page |
| 05 | Verify error counter page |
| 02 | Write error counter page |


Micron Technology, Inc. reserves the right to change products or specifications without notice.
© 2015 Micron Technology, Inc. All rights reserved.

**Table 23: Internal Drive Characteristics**

| Characteristic | Decription |
|---|---|
| Memory type | NAND Flash MLC |
| Emulated LBA size (bytes) | 512 |
| | 520 |
| | 524 |
| | 528 |
| | 4096 |
| | 4160 |
| | 4192 |
| | 4224 |
| Native programmable | Page size = 8192 user bytes |
| | Map unit size = 4096 |
| Default transfer | Alignment offset = 0 |


Micron Technology, Inc. reserves the right to change products or specifications without notice.
© 2015 Micron Technology, Inc. All rights reserved.

# Reliability

A Micron SSD incorporates advanced technology for defect and error management, using various combinations of hardware-based error correction algorithms and firmware-based static and dynamic wear-leveling algorithms.

Over the life of the SSD, uncorrectable errors may occur. An uncorrectable error is defined as data that the device reports as successfully programmed, but when read, the data differs from what was programmed.

The following reliability specifications assume correct host and drive operational interface, including all interface timings, power supply voltages, environmental requirements, and drive mounting constraints.

**Table 24: Uncorrectable Bit Error Rate**

| Read Error Rates | READ Operation |
|---|---|
| Less than 1 LBA in $10^{17}$ bits transferred | Unrecovered READ |
| Less than 1 LBA in $10^{21}$ bits transferred | Mis-corrected READ |

Note: 1. Error rate specified with automatic retries and data correction with ECC enabled and all flaws reallocated.

## Mean Time Between Failures

SSD mean time to failure (MTTF) and mean time between failures (MTBF) are predictable based on component reliability data using the methods referenced in the Telcordia SR-332 reliability prediction procedures for electronic equipment.

**Table 25: MTBF**

| Capacity | All S600DC Series Devices | |
|---|---|---|
| | MTBF (Million Hours) | Failure Rate (% per-Year) |
| 200GB | 2.5 | 0.35 |
| 400GB | 2.5 | 0.35 |
| 480GB | 2.5 | 0.35 |
| 800GB | 2.5 | 0.35 |
| 960GB | 2.5 | 0.35 |
| 1600GB | 2.5 | 0.35 |
| 1920GB | 2.5 | 0.35 |
| 3200GB | 2.5 | 0.35 |
| 3840GB | 2.5 | 0.35 |


Micron Technology, Inc. reserves the right to change products or specifications without notice.
© 2015 Micron Technology, Inc. All rights reserved.

## Data Retention

As a NAND Flash device ages with use, its capability to retain a programmed value is affected by the number of PROGRAM and ERASE operations to its cells, causing deterioration. When new, the device has a powered-off data retention capability of several years, but with use, data retention is reduced.

Temperature also affects how long the device retains its programmed value when power is removed. High temperature reduces retention capability when power is off, but is not an issue when power is applied. The SSD drive contains firmware and hardware features that can monitor and refresh memory cells when power is applied.

**Table 26: Data Retention and Drive Writes Per-Day**

| Device and Capacity | Typical Data Retention with Power Removed (Months)[1] | Drive Writes per-Day (DWPD) |
|---|---|---|
| **S655DC** | | |
| 200GB | 3 | 25 |
| 400GB | 3 | 25 |
| **S650DC** | | |
| 400GB | 3 | 10 |
| 800GB | 3 | 10 |
| 1600GB | 3 | 10 |
| 3200GB | 3 | 10 |
| **S630DC** | | |
| 400GB | 3 | 2 |
| 480GB | 3 | 3 |
| 800GB | 3 | 2 |
| 960GB | 3 | 3 |
| 1600GB | 3 | 2 |
| 1920GB | 3 | 3 |
| 3200GB | 3 | 2 |
| 3840GB | 3 | 3 |
| **S610DC** | | |
| 1920GB | 3 | <1 |
| 3840GB | 3 | <1 |

Note: 1. Typical data retention with power removed, at 40 °C and up to 90% of write endurance.


Micron Technology, Inc. reserves the right to change products or specifications without notice.
© 2015 Micron Technology, Inc. All rights reserved.

## Endurance

Endurance rating is the expected amount of host data that can be written by product when subjected to a specified workload at a specified operating and storage temperature over the specified product life. For the specific workload to achieve this level of endurance, refer to JEDEC specification JESD218. TBW is defined as 1 x $10^{12}$ bytes.

**Table 27: Endurance**

| Device and Capacity | Endurance | Unit |
|---|---|---|
| **S655DC** | | |
| 200GB | 8000 | TBW |
| 400GB | 17,000 | |
| **S650DC** | | |
| 400GB | 7000 | TBW |
| 800GB | 14,000 | |
| 1600GB | 29,000 | |
| 3200GB | 58,000 | |
| **S630DC** | | |
| 400GB | 2100 | TBW |
| 480GB | 2600 | |
| 800GB | 2900 | |
| 960GB | 5200 | |
| 1600GB | 5800 | |
| 1920GB | 10,000 | |
| 3200GB | 12,000 | |
| 3840GB | 21,000 | |
| **S610DC** | | |
| 1920GB | 2800 | TBW |
| 3840GB | 5600 | |

Notes:
1. Limited warranty with media usage provides coverage either for the warranty period or until the SSD percentage used endurance indicator reaches 100, whichever comes first.
2. TBW per the JEDEC JESDS218 specification assuming typical workloads are 50% sequential and 50% random and consist of the following: 5% are 4KB; 5% are 8KB; 10% are 16KB; 10% are 32KB; 35% are 64KB; and 35% are 128KB.


Micron Technology, Inc. reserves the right to change products or specifications without notice.
© 2015 Micron Technology, Inc. All rights reserved.

# Electrical Characteristics

Device DC power (+12V and +5V) is through the standard SAS interface. Typical power measurements listed below are based on an average of drives tested, under nominal conditions, using the listed input voltage at 60°C internal temperature. Measurements are made at 12Gb interface speeds.

- Startup power: Measured from power-on to when the drive reaches operating condition and can process media access commands.
- Peak operating mode power: Measured by testing the drive in various read and write access patterns that simulate worst case power consumption.
- Idle mode power: Measured when the drive is powered up and ready for media access commands, but before the host has sent the commands.

**Note:** Stresses greater than those listed in the following tables may cause permanent damage to the device. These are stress ratings only and device operation above ratings or conditions listed in the operation sections of this specification is not implied. Exposure to absolute maximum rating conditions for extended periods may affect reliability.


Micron Technology, Inc. reserves the right to change products or specifications without notice.
© 2015 Micron Technology, Inc. All rights reserved.

## Power Consumption

### Specifications

**Table 28: Power Consumption Specifications**

| Device and Capacity | $V_{DC}$ Start Current[1] | | | Average Idle Power (W) | Average Power Under Workload (W)[2] | | Configurable Power Limit Settings |
|---|---|---|---|---|---|---|---|
| | +5A | +12A | Power (W) | | Sequential Read | Sequential Write | |
| **S655DC** | | | | | | | |
| 200GB | 1.05 | 0.34 | 9.29 | 3.54 | 5.10 | 6.79 | 6, 7, 8, 9, 10, 11 |
| 400GB | 1.05 | 0.34 | 9.29 | 3.54 | 5.10 | 6.79 | 6, 7, 8, 9, 10, 11 |
| **S650DC** | | | | | | | |
| 400GB | 1.05 | 0.34 | 9.29 | 3.54 | 5.10 | 6.79 | 6, 7, 8, 9, 10, 11 |
| 800GB | 1.05 | 0.34 | 9.29 | 3.54 | 5.10 | 6.79 | 6, 7, 8, 9, 10, 11 |
| 1600GB | 0.93 | 0.50 | 10.62 | 4.14 | 7.33 | 10.78 | 8, 9, 10, 11, 12, 13, 14 |
| 3200GB | 0.94 | 0.61 | 12.06 | 5.40 | 9.15 | 13.15 | 9, 10, 11, 12, 13, 14, 15 |
| **S630DC** | | | | | | | |
| 400GB | 1.05 | 0.34 | 9.29 | 3.54 | 5.10 | 6.79 | 6, 7, 8, 9, 10, 11 |
| 480GB | 1.05 | 0.34 | 9.29 | 3.54 | 5.10 | 6.79 | 6, 7, 8, 9, 10, 11 |
| 800GB | 1.05 | 0.34 | 9.29 | 3.54 | 5.10 | 6.79 | 6, 7, 8, 9, 10, 11 |
| 960GB | 1.05 | 0.34 | 9.29 | 3.54 | 5.10 | 6.79 | 6, 7, 8, 9, 10, 11 |
| 1600GB | 0.93 | 0.50 | 10.62 | 4.14 | 7.33 | 10.78 | 8, 9, 10, 11, 12, 13, 14 |
| 1920GB | 0.90 | 0.49 | 10.41 | 4.17 | 7.36 | 10.65 | 8, 9, 10, 11, 12, 13, 14 |
| 3200GB | 0.94 | 0.61 | 12.06 | 5.40 | 9.15 | 13.15 | 9, 10, 11, 12, 13, 14, 15 |
| 3840GB | 0.98 | 0.59 | 11.96 | 5.93 | 9.29 | 13.30 | 9, 10, 11, 12, 13, 14, 15 |
| **S610DC** | | | | | | | |
| 1920GB | 0.90 | 0.49 | 10.41 | 4.17 | 7.36 | 10.65 | 8, 9, 10, 11, 12, 13, 14 |
| 3840GB | 0.98 | 0.59 | 11.96 | 5.93 | 9.29 | 13.30 | 9, 10, 11, 12, 13, 14, 15 |

Notes:
1. Measured with average reading DC ammeter. Instantaneous +12V current peaks will exceed these values. Power supply at nominal voltage. Number of drives tested = 6 at 60 °C internal.
2. Sequential READ and WRITE operations are based on 128K block transfer at queue depth = 32.

### Identifier and Supported Settings

Supported power consumption identifier settings are shown in the table below. An INQUIRY SCSI command or MODE SENSE command can be used to query VPD page 0x8D for supported power levels and associated identifiers.

The MODE SENSE and SELECT commands can be used to read, write, and modify the mode page 0x1A, subpage 1. When the SELECT command is used to write a new identifier value, the value is saved in nonvolatile memory, unchanged until modified.


Micron Technology, Inc. reserves the right to change products or specifications without notice.
© 2015 Micron Technology, Inc. All rights reserved.

**Table 29: Power Consumption Identifier and Supported Settings**

Note 2 applies to entire table.

| Device and Capacity | Mode Page | | | | | | | Unit |
|---|---|---|---|---|---|---|---|---|
| | 0x0 (Default) | 0x1 | 0x2 | 0x3 | 0x4 | 0x5 | 0x6 | |
| **S655DC** | | | | | | | | |
| 200GB | 11 | 10 | 9 | 8 | 7 | 6 | N/A | W |
| 400GB | 11 | 10 | 9 | 8 | 7 | 6 | N/A | |
| **S650DC** | | | | | | | | |
| 400GB | 11 | 10 | 9 | 8 | 7 | 6 | N/A | W |
| 800GB | 11 | 10 | 9 | 8 | 7 | 6 | N/A | |
| 1600GB | 14 | 13 | 12 | 11 | 10 | 9 | 8 | |
| 3200GB | 15 | 14 | 13 | 12 | 11 | 10 | 9 | |
| **S630DC** | | | | | | | | |
| 400GB | 11 | 10 | 9 | 8 | 7 | 6 | N/A | W |
| 480GB | 11 | 10 | 9 | 8 | 7 | 6 | N/A | |
| 800GB | 11 | 10 | 9 | 8 | 7 | 6 | N/A | |
| 960GB | 11 | 10 | 9 | 8 | 7 | 6 | N/A | |
| 1600GB | 14 | 13 | 12 | 11 | 10 | 9 | 8 | |
| 1920GB | 14 | 13 | 12 | 11 | 10 | 9 | 8 | |
| 3200GB | 15 | 14 | 13 | 12 | 11 | 10 | 9 | |
| 3840GB | 15 | 14 | 13 | 12 | 11 | 10 | 9 | |
| **S610DC** | | | | | | | | |
| 1920GB | 14 | 13 | 12 | 11 | 10 | 9 | 8 | W |
| 3840GB | 15 | 14 | 13 | 12 | 11 | 10 | 9 | |

Note: 1. Device settings can be configured by modifying VPD mode page 0x1A, subpage 0x1.

## Power

**Table 30: Power Specifications**

| Parameter/Condition | $V_{DC}$ (Margin) | Min | Max | Unit |
|---|---|---|---|---|
| Voltage input – Start up | 12 (±10%) | 10.8 | 13.2 | $V_{DC}$ |
| Voltage input – Steady state | 12 (±5%) | 11.4 | 12.6 | |
| Voltage input | 5 (±5%) | 4.75 | 5.25 | |


Micron Technology, Inc. reserves the right to change products or specifications without notice.
© 2015 Micron Technology, Inc. All rights reserved.

## Environmental Specifications

### Table 31: Environmental Specifications – 1

| Parameter/Condition | Min | Max | Unit |
|---|---|---|---|
| Operating temperature[1] | 32/0 | 122/50 | °F/°C |
| Non-operating temperature | –40/–40 | 165/75 | |
| Rate of temperature change | – | 36/20 | |
| Relative humidity (non-condensing) | 5 | 95 | %rh |
| Relative humidity (rate of change /hr) | – | 20 | |
| Effective altitude (operating) | –1000/304.8 | 10,000/3048 | ft/M |
| Effective altitude (non-operating) | –1000/304.8 | 40,000/12,192 | |

Note: 1. Based on ambient air temperature

### Table 32: Environmental Specifications – 2

| Parameter | Condition | Max | Unit |
|---|---|---|---|
| Operating shock (half sine wave) | Gs | 1000 | g |
| | Duration | 0.5 | ms |
| | Interval | 2 | sec |
| Non-operating shock (half sine wave) | Gs | 1000 | g |
| | Duration | 0.5 | ms |
| | Interval | 2 | sec |


Micron Technology, Inc. reserves the right to change products or specifications without notice.
© 2015 Micron Technology, Inc. All rights reserved.

# Regulatory Compliance

Micron SSDs comply with the following:

- RoHS
- CE (Europe): EN55032, EN55024 Class B, RoHS
- FCC: CFR Title 47, Part 15 Class B
- UL (US): approval to UL-60950-1, 2nd Edition, IEC 60950-1:2005, 2nd Edition; Am 1:2009, EN 60950-1 (2006) + A11:2009+ A1:2010 + A12:2011 + A2:2013
- BSMI (Taiwan): approval to CNS 13438 Class B, CNS 15663
- RCM (Australia, New Zealand): AS/NZS CISPR32 Class B
- KC RRL (Korea): approval to KN32 Class B, KN 35 Class B
- W.E.E.E.: Compliance with EU WEEE directive 2012/19/EC. Additional obligations may apply to customers who place these products in the markets where WEEE is enforced.
- TUV (Germany): approval to IEC60950/EN60950
- VCCI (Japan): 2014-04 Class B
- IC (Canada): ICES-003 Class B
  - This Class B digital apparatus complies with Canadian ICES-003.
  - Cet appareil numérique de la classe B est conforme à la norme NMB-003 du Canada.

## FCC Rules

This equipment has been tested and found to comply with the limits for a Class A digital device, pursuant to part 15 of the FCC rules. These limits are designed to provide reasonable protection against harmful interference when the equipment is operated in a commercial environment.. This equipment generates, uses, and can radiate radio frequency energy and, if not installed and used in accordance with the instruction manual, may cause harmful interference to radio communications. Operation of this equipment in a residential area is likely to cause harmful interference in which case the user will be required to correct the interference at one's own expense.


Micron Technology, Inc. reserves the right to change products or specifications without notice.
© 2015 Micron Technology, Inc. All rights reserved.

# Package Dimensions

## 2.5-Inch Package – 7mm

### Figure 5: 2.5-Inch Package – 7mm

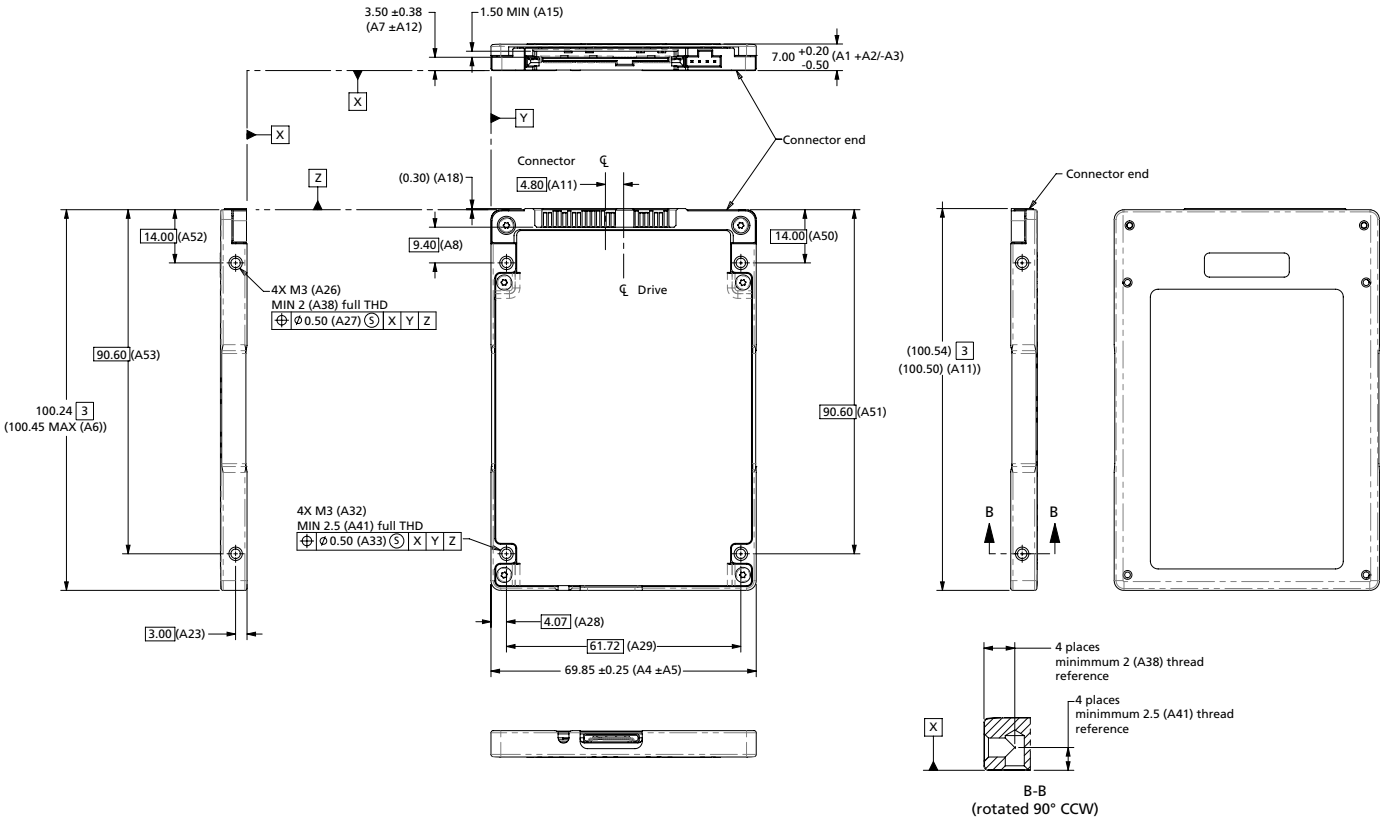



Micron Technology, Inc. reserves the right to change products or specifications without notice.
© 2015 Micron Technology, Inc. All rights reserved.

## 2.5-Inch Package – 15mm

### Figure 6: 2.5-Inch Package – 15mm

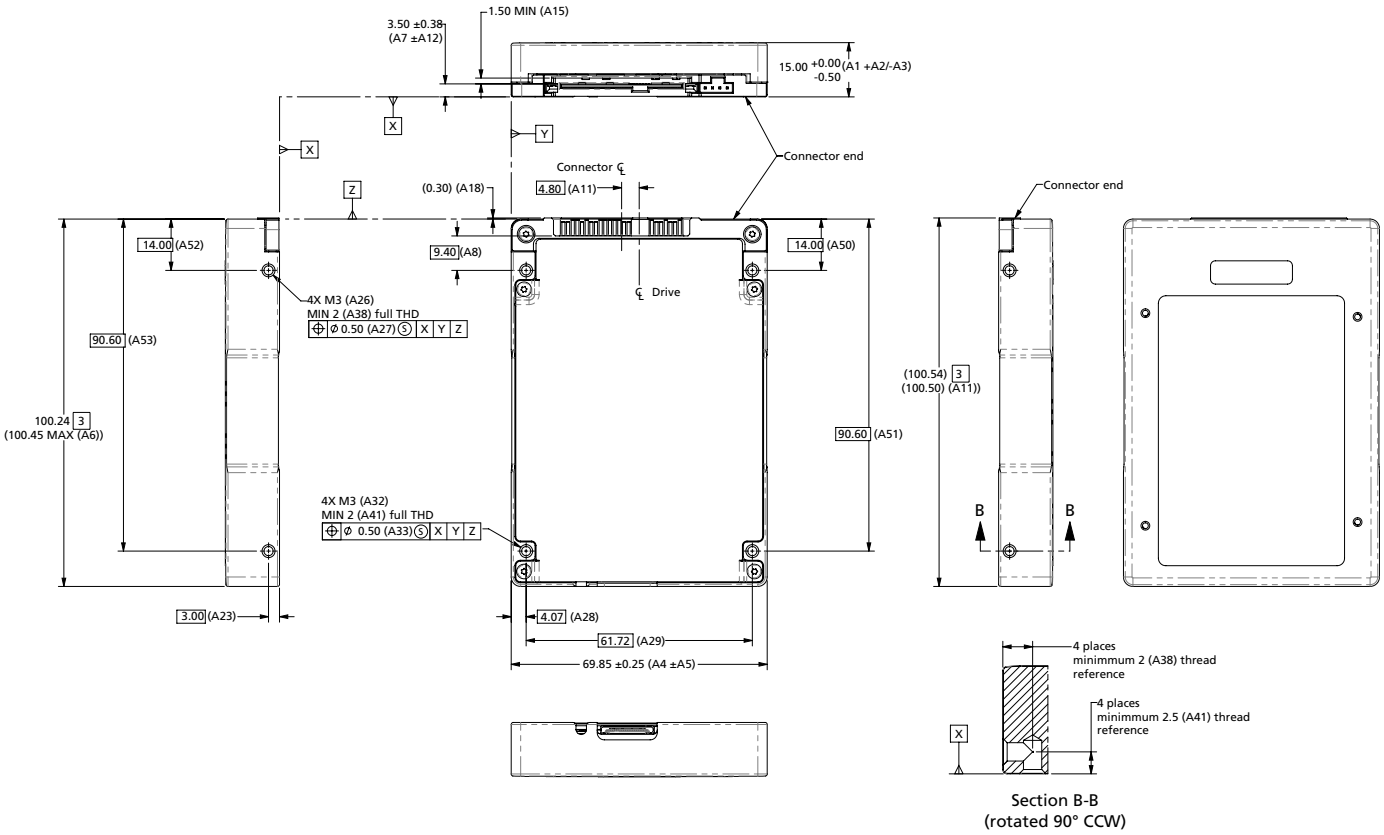



Micron Technology, Inc. reserves the right to change products or specifications without notice.
© 2015 Micron Technology, Inc. All rights reserved.

# SAS References

- Serial Attached SCSI-3 (SAS-3)
- SCSI Architecture Model-5 (SAM-5)
- SCSI Primary Commands-3 (SPC-3)
- SCSI Primary Commands-4 (SPC-4)
- SCSI ATA Translation-2 (SAT-2)
- SCSI Block Commands-3 (SBC-3)


Micron Technology, Inc. reserves the right to change products or specifications without notice.
© 2015 Micron Technology, Inc. All rights reserved.

# Revision History

## Rev. H – 9/17

- Change Power Pin P3 to SAS Power Disable from NC
- Updated Regulatory Compliance section

## Rev. G – 10/16

- Production status
- Updated DWPD endurance specification for S630DC 400GB

## Rev. F – 3/16

- Updated LBA setting tables, power matrix table, performance numbers, and endurance specifications

## Rev. E – 12/15

- Updated Performance table in Features section

## Rev. D – 11/15

- Revised maximum operating temperature to 50°C

## Rev. C – 9/15

- Revised specifications, densities, and MPNs

## Rev. B – 6/15

- Revised specifications, densities, and MPNs

## Rev. A – 5/15

- Initial release

8000 S. Federal Way, P.O. Box 6, Boise, ID 83707-0006, Tel: 208-368-4000
www.micron.com/products/support Sales inquiries: 800-932-4992
Micron and the Micron logo are trademarks of Micron Technology, Inc.
All other trademarks are the property of their respective owners.
This data sheet contains minimum and maximum limits specified over the power supply and temperature range set forth herein. Although considered final, these specifications are subject to change, as further product development and data characterization sometimes occur.


Micron Technology, Inc. reserves the right to change products or specifications without notice.
© 2015 Micron Technology, Inc. All rights reserved.