TOSHIBA

TOSHIBA Original CMOS 32-Bit Microcontroller

TLCS-900/H1 Series

TMP92CM22

TOSHIBA CORPORATION

Semiconductor Company

Preface

Thank you very much for making use of Toshiba microcomputer LSIs.
Before use this LSI, refer the section, “Points of Note and Restrictions”.

CMOS 32-Bit Microcontrollers

TMP92CM22FG

1. Outline and Device Characteristics

TMP92CM22 is high-speed advanced 32-bit microcontroller developed for controlling equipment, which processes mass data.

TMP92CM22FG is a microcontroller, which has a high-performance CPU (900/H1 CPU) and various built-in I/Os. TMP92CM22F is housed in a 100-pin flat package.

Device characteristics are as follows:

(1) CPU: 32-bit CPU (900/H1 CPU)

- Compatible with TLCS-900, 900/L, 900/L1, 900/H, and 900/H2's instruction code
- 16 Mbytes of linear address space
- General-purpose register and register banks
- Micro DMA: 8 channels (250 ns/4 bytes at f_{SYS} = 20 MHz, best case)

(2) Minimum instruction execution time: 50 ns (at f_{SYS} = 20 MHz)

(3) Internal memory

- Internal RAM: 32 Kbytes (32-bit 1-clock access, programmable)
- Internal ROM: None

(4) External memory expansion

- Expandable up to 16 Mbytes (Shared program/data area)
- Can simultaneously support 8-/16-bit width external data bus
  ···Dynamic data bus sizing
- Separate bus system

(5) Memory controller

- Chip select output: 4 channels

(6) 8-bit timers: 4 channels

(7) 16-bit timers: 2 channels

030619EBP1

- The information contained herein is subject to change without notice.
- The information contained herein is presented only as a guide for the applications of our products. No responsibility is assumed by TOSHIBA for any infringements of patents or other rights of the third parties which may result from its use. No license is granted by implication or otherwise under any patent or patent rights of TOSHIBA or others.
- TOSHIBA is continually working to improve the quality and reliability of its products. Nevertheless, semiconductor devices in general can malfunction or fail due to their inherent electrical sensitivity and vulnerability to physical stress. It is the responsibility of the buyer, when utilizing TOSHIBA products, to comply with the standards of safety in making a safe design for the entire system, and to avoid situations in which a malfunction or failure of such TOSHIBA products could cause loss of human life, bodily injury or damage to property.
  In developing your designs, please ensure that TOSHIBA products are used within specified operating ranges as set forth in the most recent TOSHIBA products specifications. Also, please keep in mind the precautions and conditions set forth in the "Handling Guide for Semiconductor Devices," or "TOSHIBA Semiconductor Reliability Handbook" etc..
- The TOSHIBA products listed in this document are intended for usage in general electronics applications (computer, personal equipment, office equipment, measuring equipment, industrial robotics, domestic appliances, etc.). These TOSHIBA products are neither intended nor warranted for usage in equipment that requires extraordinarily high quality and/or reliability or a malfunction or failure of which may cause loss of human life or bodily injury ("Unintended Usage"). Unintended Usage include atomic energy control instruments, airplane or spaceship instruments, transportation instruments, traffic signal instruments, combustion control instruments, medical instruments, all types of safety devices, etc.. Unintended Usage of TOSHIBA products listed in this document shall be made at the customer's own risk.
- The products described in this document are subject to the foreign exchange and foreign trade laws.
- TOSHIBA products should not be embedded to the downstream products which are prohibited to be produced and sold, under any law and regulations.
- For a discussion of how the reliability of microcontrollers can be predicted, please refer to Section 1.3 of the chapter entitled Quality and Reliability Assurance/Handling Precautions.

Purchase of TOSHIBA I²C components conveys a license under the Philips I²C Patent Rights to use these components in an I²C system, provided that the system conforms to the I²C Standard Specification as defined by Philips.

(8) General-purpose serial interface: 2 channels
- UART/synchronous mode
- IrDA

(9) Serial bus interface: 1 channel
- I^2C bus mode
- Clock synchronous mode

(10) 10-bit AD converter: 8 channels

(11) Watchdog timer

(12) Interrupts: 41 interrupts
- 9 CPU interrupts: Software interrupt instruction and illegal instruction
- 25 internal interrupts: Seven selectable priority levels
- 7 external interrupts: Seven selectable priority levels (INT0 to INT5 and $\overline{NMI}$)
  (INT0 to INT3 selectable edge or level interrupt)

(13) Input/output ports: 58 pins (at external 8-bit data bus memory)

(14) Standby function
- Three HALT modes: IDLE2 (Programmable), IDLE1, STOP

(15) Dual-clock controller
- PLL: $fc = f_{OSCH} \times 4$ (fc = 40 MHz at f_{OSCH} = 10 MHz)
- Clock gear function: Select a high-frequency clock fc to fc/16

(16) Operating voltage
- DVCC = 3.0 V to 3.6 V (fc max = 40 MHz)

(17) Package
- 100-pin QFP: P-LQFP100-1414-0.50F

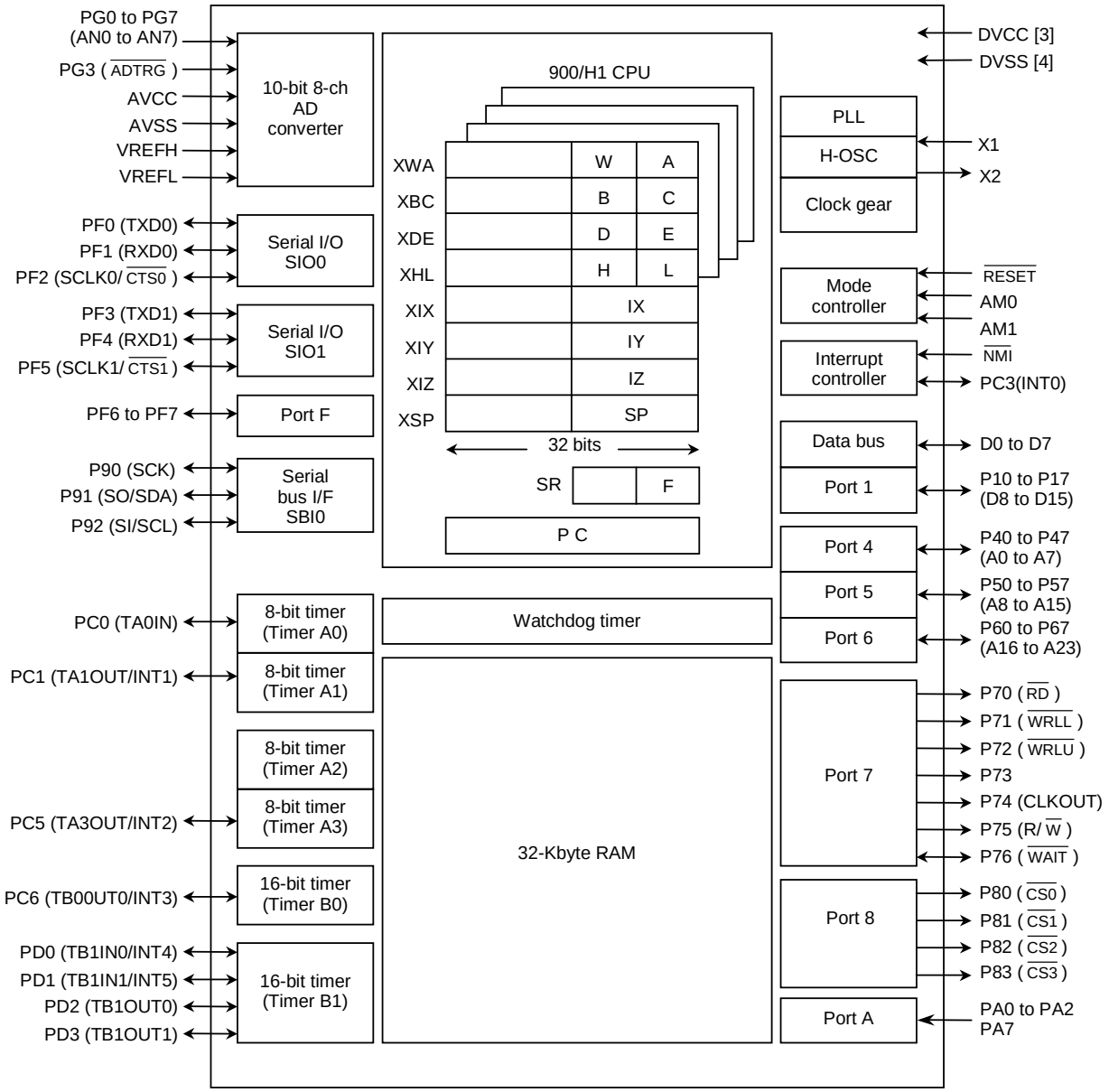

Figure 1.1 TMP92CM22 Block Diagram

2. Pin Assignment and Functions

The assignment of input/output pins for the TMP92CM22FG, their names and functions are as follows.

2.1 Pin Assignment

Figure 2.1.1 shows the pin assignment of the TMP92CM22FG.

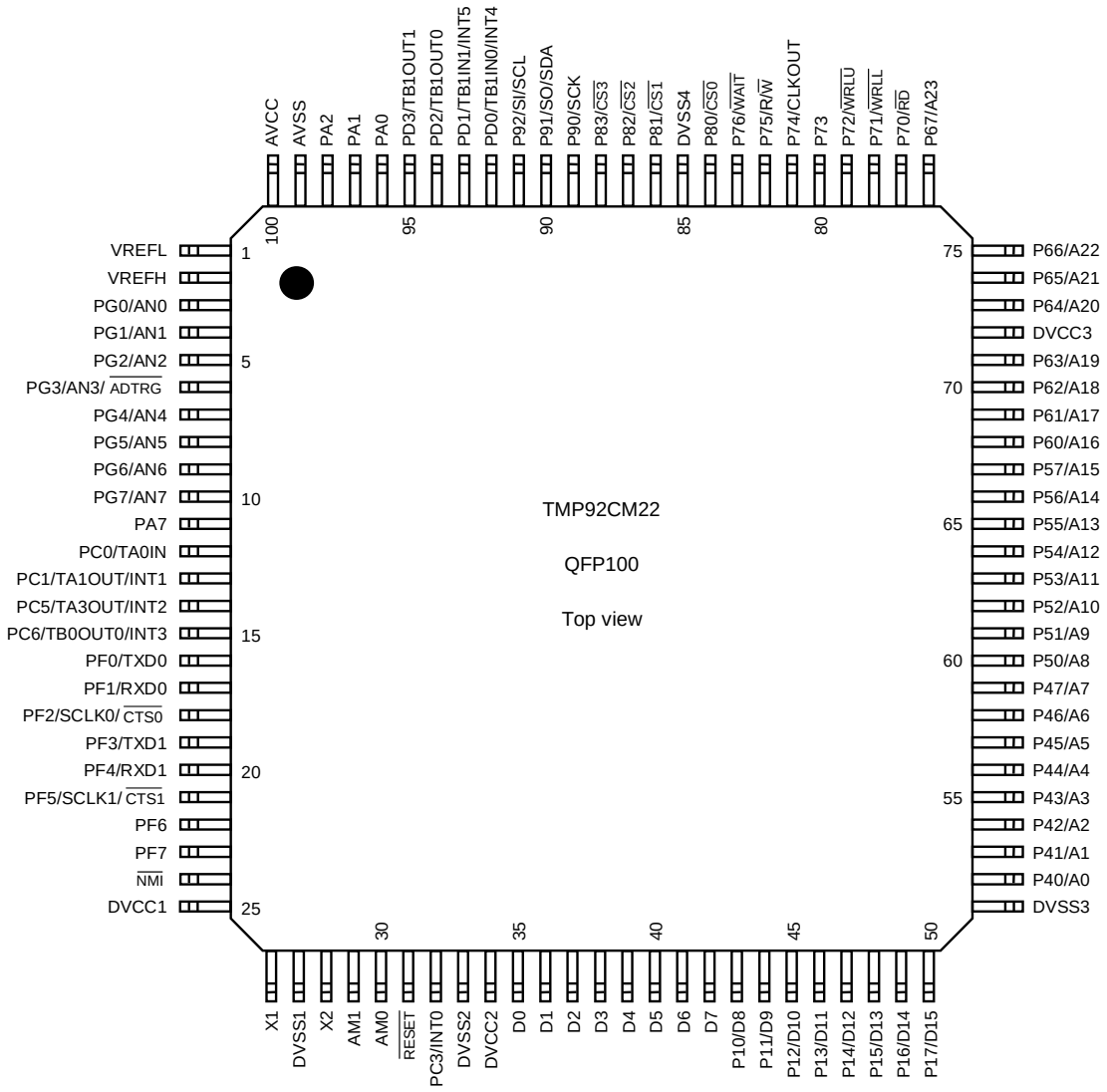

Figure 2.1.1 Pin Assignment Diagram (100-Pin QFP)

2.2 Pin Names and Functions

The following tables show the names and functions of the input/output pins.

Table 2.2.1 Pin Names and Functions (1/2)

Pin Names	Number of Pins	I/O	Functions
D0 to D7	8	I/O	Data (Lower): Data bus D0 to D7.
P10 to P17 D8 to D15	8	I/O I/O	Port 1: I/O port that allows I/O to be selected at the bit level. (when used to the external 8-bit bus.) Data: Data bus D8 to D15.
P40 to P47 A0 to A7	8	I/O Output	Port 4: I/O port. Address: Address bus A0 to A7.
P50 to P57 A8 to A15	8	I/O Output	Port 5: I/O port. Address: Address bus A8 to A15.
P60 to P67 A16 to A23	8	I/O Output	Port 6: I/O port. Address: Address bus A16 to A23.
P70 $\overline{RD}$	1	Output Output	Port 70: Output port. Read: Strobe signal for reading external memory.
P71 $\overline{WRLL}$	1	Output Output	Port 71: Output port. Write: Strobe signal for writing data to pins D0 to D7.
P72 $\overline{WRLU}$	1	Output Output	Port 72: Output port. Write: Strobe signal for writing data to pins D8 to D15.
P73	1	Output	Port 73: Output port.
P74 CLKOUT	1	Output Output	Port 74: Output port. Clock: Output system clock.
P75 R/ $\overline{W}$	1	Output Output	Port 75: Output port. Read/write: This port is 1 when read and dummy cycle. This port is 0 when write cycle.
P76 $\overline{WAIT}$	1	I/O Input	Port 76: I/O port. Wait: Pin used to request bus wait to CPU.
P80 $\overline{CS0}$	1	Output Output	Port 80: Output port. Chip select 0: Outputs 0 when address is within specified address area.
P81 $\overline{CS1}$	1	Output Output	Port 81: Output port. Chip select 1: Outputs 0 when address is within specified address area.
P82 $\overline{CS2}$	1	Output Output	Port 82: Output port. Chip select 2: Outputs 0 when address is within specified address area.
P83 $\overline{CS3}$	1	Output Output	Port 83: Output port. Chip select 3: Outputs 0 when address is within specified address area.
P90 SCK	1	I/O I/O	Port 90: I/O port. Serial bus interface clock I/O data at SIO mode.
P91 SO SDA	1	I/O Output I/O	Port 91: I/O port. Serial bus interface send data at SIO mode. Serial bus interface send/receive data at I^2C mode. (Open-drain output mode by programmable.)
P92 SI SCL	1	I/O Input I/O	Port 92: I/O port. Serial bus interface receive data at SIO mode. Serial bus interface clock I/O data at I^2C mode. (Open-drain output mode by programmable.)
PA0 to PA2, PA7	4	Input	Port A0 to A2, A7: Input port (with pull-up resistor).

Table 2.2.2 Pin Names and Functions (2/2)

Pin Names	Number of Pins	I/O	Functions
PC0 TA0IN	1	I/O Input	Port C0: I/O port. Timer input: 8-bit timer A0 input.
PC1 INT1 TA1OUT	1	I/O Input Output	Port C1: I/O port. Interrupt request pin 1: Interrupt request pin with programmable level/rising edge/falling edge. Timer output: 8-bit timer A0 or timer A1 output.
PC3 INT0	1	I/O Input	Port C3: I/O port. Interrupt request pin 0: Interrupt request pin with programmable level/rising edge/falling edge.
PC5 INT2 TA3OUT	1	I/O Input Output	Port C5: I/O port. Interrupt request pin 2: Interrupt request pin with programmable level/rising edge/falling edge. Timer output: 8-bit timer A2 or timer A3 output.
PC6 INT3 TB0OUT0	1	I/O Input Output	Port C6: I/O port. Interrupt request pin 3: Interrupt request pin with programmable level/rising edge/falling edge. Timer output: 16-bit timer B0 output.
PD0 INT4 TB1IN0	1	I/O Input Input	Port D0: I/O port. Interrupt request pin 4: Interrupt request pin with programmable rising edge/falling edge. Timer input: 16-bit timer B1 input 0.
PD1 INT5 TB1IN1	1	I/O Input Input	Port D1: I/O port. Interrupt request pin 5: Interrupt request pin with programmable rising edge/falling edge. Timer input: 16-bit timer B1 input 1.
PD2 TB1OUT0	1	I/O Output	Port D2: I/O port. Timer output: 16-bit timer B1 output 0.
PD3 TB1OUT1	1	I/O Output	Port D3: I/O port. Timer output: 16-bit timer B1 output 1.
PF0 TXD0	1	I/O Output	Port F0: I/O port. Serial send data 0: (Open-drain output mode by programmable.)
PF1 RXD0	1	I/O Input	Port F1: I/O port. Serial receive data 0.
PF2 SCLK0 $\overline{\text{CTS0}}$	1	I/O I/O Input	Port F2: I/O port. Serial 0 clock I/O. Serial data send enable 0 (Clear to send).
PF3 TXD1	1	I/O Output	Port F3: I/O port. Serial send data 1: (Open-drain output mode by programmable.)
PF4 RXD1	1	I/O Input	Port F4: I/O port. Serial receive data 1.
PF5 SCLK1 $\overline{\text{CTS1}}$	1	I/O I/O Input	Port F5: I/O port. Serial 1 clock I/O. Serial data send enable 1 (Clear to send).
PF6 to PF7	2	I/O	Port F6 to F7: I/O port.
PG0 to PG7 AN0 to AN7 $\overline{\text{ADTRG}}$	8	Input Input Input	Port G0 to G7: Input port. Analog input 0 to 7: Pin used to input to AD converter. AD trigger: Pin used to request AD converter start (Share with PG3).
$\overline{\text{NMI}}$	1	Input	Non-Maskable interrupt request pin.
AM0, AM1	2	Input	Operation mode: Fixed to AM1 = “0”, AM0 = “1”: External 16-bit bus start, 8-/16-bit dynamic sizing. Fixed to AM1 = “1”, AM0 = “0”: External 8-bit bus start, 8-/16-bit dynamic sizing.
X1/X2	2	I/O	High-frequency oscillator connection pin.
$\overline{\text{RESET}}$	1	Input	Reset : Initialize TMP92CM22 (Schmitt input, with pull-up resistor).
VREFH	1	Input	Pin for reference voltage input to AD converter (H).
VREFL	1	Input	Pin for reference voltage input to AD converter (L).
AVCC	1		Power supply pin for AD converter.
AVSS	1		GND pin for AD converter (0 V).
DVCC	3		Power supply pins (All Vcc pins should be connected with the power supply pin).
DVSS	4	–	GND pins (0 V) (All DVSS pins should be connected with GND (0 V)).

3. Operation

This section describes the basic components, functions and operation of the TMP92CM22.

3.1 CPU

The TMP92CM22 incorporates a high-performance 32-bit CPU (The TLCS-900/H1 CPU). For a description of this CPU's operation, please refer to the section of this data book which describes the TLCS-900/H1 CPU.

The following sub-sections describe functions peculiar to the CPU used in the TMP92CM22; these functions are not covered in the section devoted to the TLCS-900/H1 CPU.

3.1.1 Outline

"TLCS-900/H1 CPU" is high-speed and high-performance CPU based on "TLCS-900/L1 CPU". "TLCS-900/H1 CPU" has expanded 32-bit internal and external data bus to process instructions more quickly.

Outline of "TLCS-900/H1" CPU are as follows:

Table 3.1.1 Outline of CPU

Width of CPU address bus	24 bits		
Width of CPU data bus	32 bits		
Internal operating frequency	20 MHz		
Minimum bus cycle	1-clock access (50 ns at 20 MHz)		
Function of data bus sizing	8 bits		
Internal RAM	32 bits 1-clock access		
Internal I/O	8-/16-bit	2-clock access	900/H1 I/O
	8-/16-bit	5-to 6-clock access	900/H1 I/O
External device	8 bits 2-clock access (can insert some waits)		
Minimum instruction execution cycle	1 clock (50 ns at 20 MHz)		
Conditional jump	2 clocks (100 ns at 20 MHz)		
Instruction queue buffer	12 bytes		
Instruction set	Compatible with TLCS-900, 900/L, 900/H, 900/L1, and 900/H2 instruction codes (However, NORMAL, MAX, MIN, and LDX instructions is deleted)		
CPU mode	Only maximum mode		
Micro DMA	8 channels		

3.1.2 Reset Operation

When resetting the TMP92CM22 microcontroller, ensure that the power supply voltage is within the operating voltage range, and that the internal high-frequency oscillator has stabilized. Then hold the RESET input to low for at least 20 system clocks (16 μs at fc = 40 MHz).

When the reset has been accepted, the CPU performs the following:

- Sets the program counter (PC) as follows in accordance with the reset vector stored at address FFFF00H to FFFF02H:

  PC<7:0> ← Data in location FFFF00H
  PC<15:8> ← Data in location FFFF01H
  PC<23:16> ← Data in location FFFF02H

- Sets the stack pointer (XSP) to 00000000H.
- Sets bits <IFF0:2> of the status register (SR) to 111 (Thereby setting the interrupt level mask register to level 7).
- Clears bits <RFP0:1> of the status register to 00 (Thereby selecting register bank 0).

When the reset is released, the CPU starts executing instructions according to the program counter settings. CPU internal registers not mentioned above do not change when the reset is released.

When the reset is accepted, the CPU sets internal I/O, ports and other pins as follows.

- Initializes the internal I/O registers as "Table of Special Function Registers (SFRs)" in Section 5.
- Sets the input or output port to general-purpose input port.

Internal reset is released as soon as external reset is released and $\overline{\text{RESET}}$ input pin is set to "H".
The operation of memory controller cannot be insured until power supply becomes stable after power-on reset. The external RAM data provided before turning on the TMP92CM22 may be spoiled because the control signals are unstable until power supply becomes stable after power on reset.

Figure 3.1.1 shows the timing of a reset for the TMP92CM22.

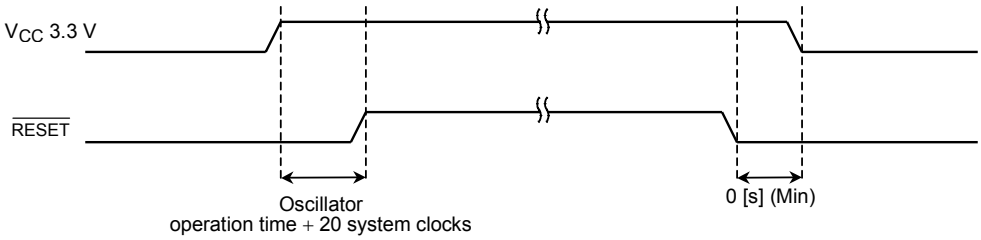

Figure 3.1.1 Reset Timing Example

3.1.3 Outline of Operation Mode

Set AM1 and AM0 pins to “10” to use 8-bit external bus, or set it to “01” to use 16-bit external bus.

Table 3.1.2 Operation Mode Setup Table

Operation	Mode Setting Input Pin		
	RESET	AM1	AM0
16-bit external bus start 8-/16-bit dynamic bus sizing	↗	0	1
8-bit external bus start 8-/16-bit dynamic bus sizing		1	0

3.2 Memory Map

Figure 3.2.1 shows memory map of TMP92CM22.

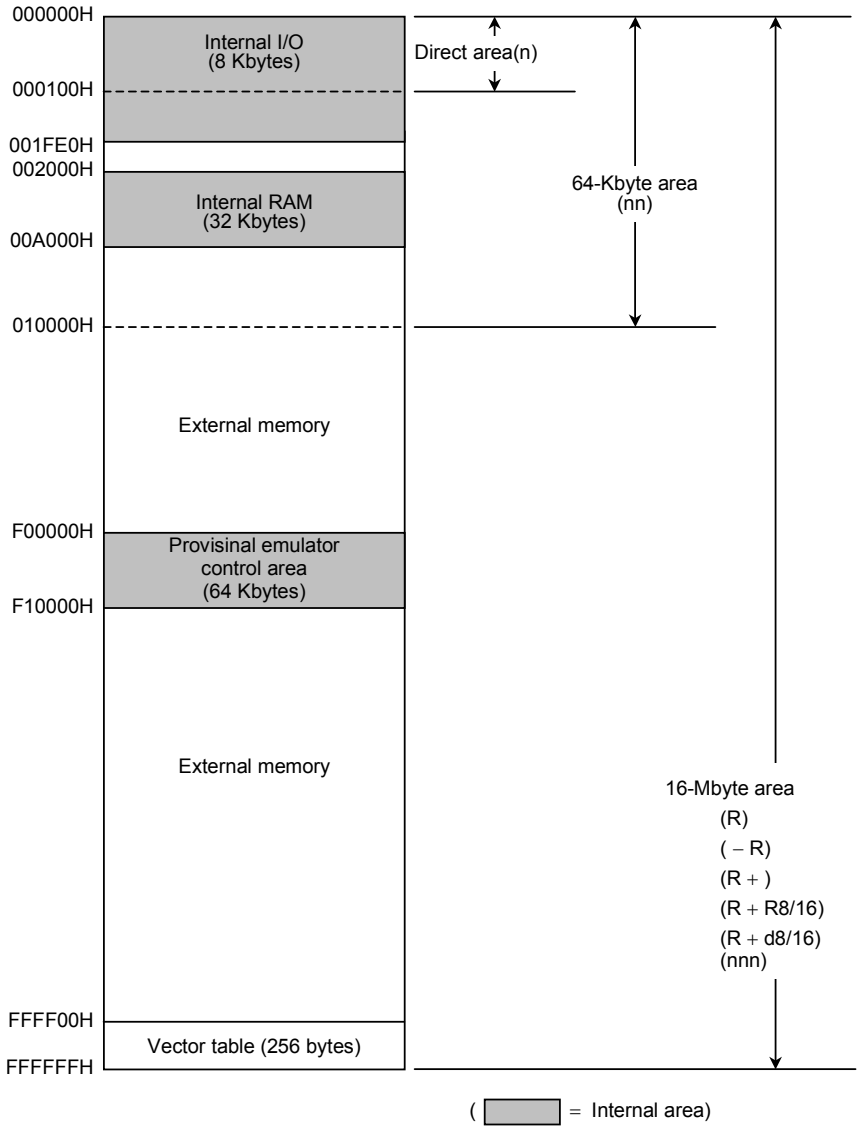

Figure 3.2.1 Memory Map

Note 1: When use emulator, optional 64 Kbytes of 16-Mbyte area are used to control emulator. Therefore, don't use this area.

Note 2: Don't use the last 16-byte area (FFFFF0H to FFFFFFH). This area is reserved.

Note 3: On emulator $\overline{\text{WRLL}}$ signal, $\overline{\text{WRLU}}$ signal and $\overline{\text{RD}}$ signal are asserted, when provisional emulator control area is accessed.

Be careful to use extend memory.

3.3 Clock Function and Standby Function

TMP92CM22 contains (1) Clock gear, (2) Standby controller and (3) Noise-reducing circuit. It is used for low-power, low-noise systems.

This chapter is organized as follows:

3.3.1 Block Diagram of System Clock

3.3.2 SFRs

3.3.3 System Clock Controller

3.3.4 Clock Doubler (PLL)

3.3.5 Noise Reduction Circuits

3.3.6 Standby Controller

The clock operating modes are as follows: (a) Single clock mode (X1 and X2 pins only), (b) Dual clock mode (X1, X2 pins and PLL).
Figure 3.3.1 shows a transition figure.

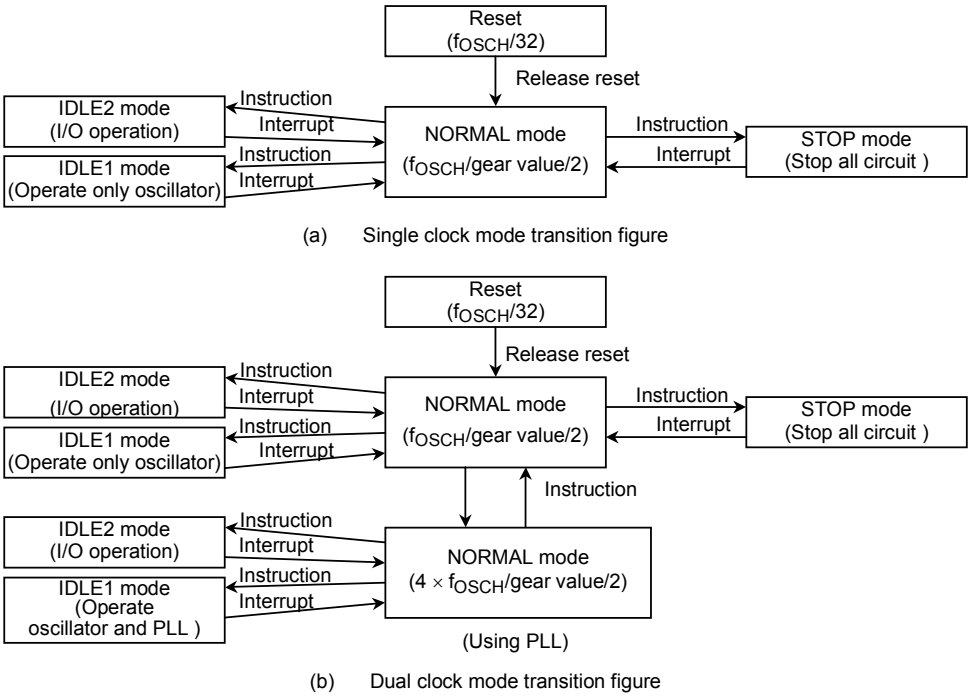

Figure 3.3.1 System Clock Block Diagram

The clock frequency input from the X1 and X2 pins is called f_{OSCH} and the clock frequency selected by SYSCR1<GEAR2:0> is called the system clock f_{FPH}. The system clock f_{SYS} is defined as the divided 2 clocks of f_{FPH}, and one cycle of f_{SYS} is defined to as one state.

3.3.1 Block Diagram of System Clock

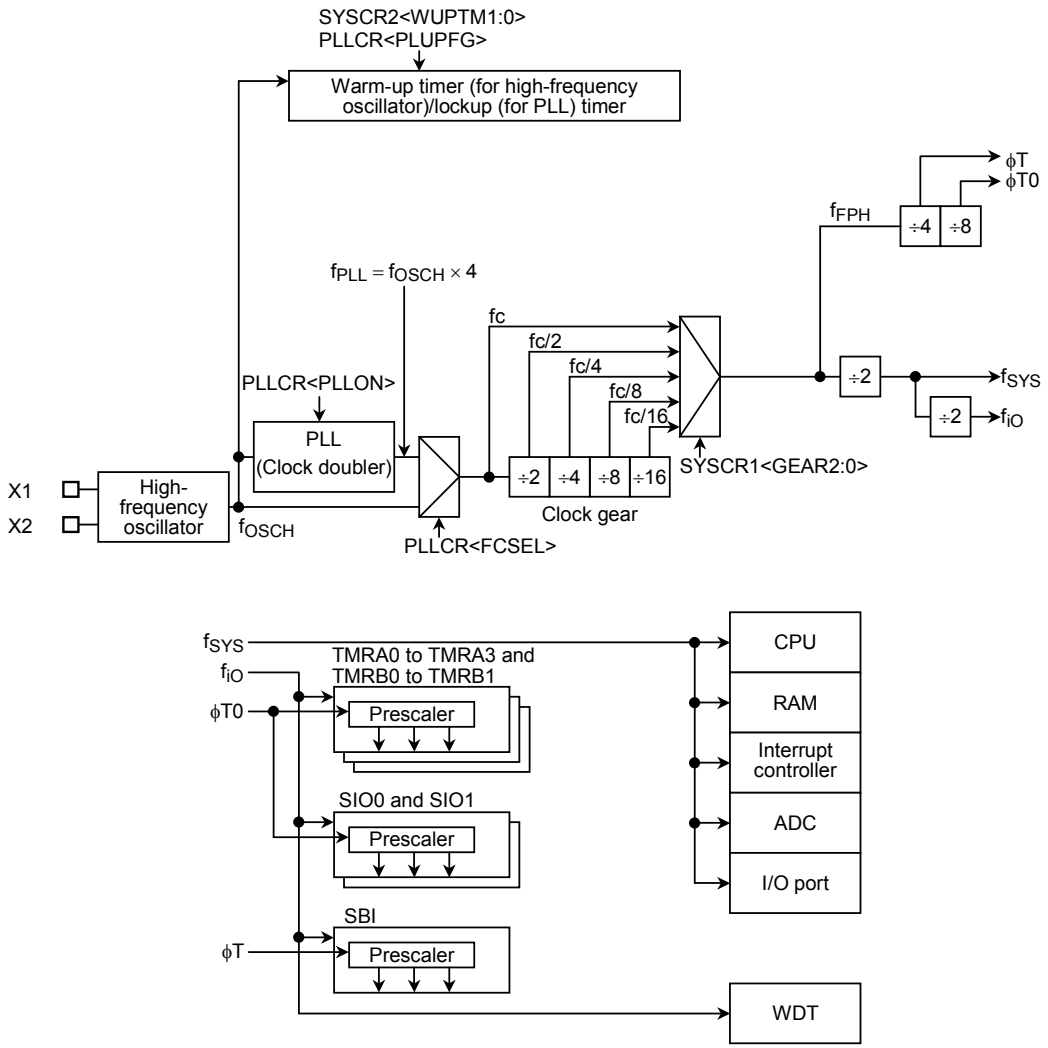

Figure 3.3.2 Block Diagram of Dual Clock and System Clock

3.3.2 SFRs

		7	6	5	4	3	2	1	0
SYSCR0 (10E0H)	Bit symbol	–					–		
	Read/Write	R/W					R/W		
	After reset	1					0		
	Function	Always write “1”.					Always write “0”.		
SYSCR1 (10E1H)	Bit symbol					–	GEAR2	GEAR1	GEAR0
	Read/Write					R/W	R/W		
	After reset					0	1	0	0
	Function					Always write “0”.	Select gear value of high-frequency oscillator 000: High-frequency oscillator 001: High-frequency oscillator/2 010: High-frequency oscillator/4 011: High-frequency oscillator/8 100: High-frequency oscillator/16 101: 110: 111: Reserved		
SYSCR2 (10E2H)	Bit symbol	–		WUPTM1	WUPTM0	HALTM1	HALTM0	SELDRV	DRVE
	Read/Write	R/W		R/W					
	After reset	0		1	0	1	1	0	0
	Function	Always write “0”.		Select WUP time for oscillator 00: Reserved 01: 2^8/Input frequency 10: 2^{14}/Input frequency 11: 2^{16}/Input frequency		Select HALT mode 00: Reserved 01: STOP mode 10: IDLE1 mode 11: IDLE2 mode		<DRVE> Select using mode 0: STOP 1: IDLE1	1: Pin state control in STOP/ IDLE1 mode

Note: The unassigned register, SYSCR0<bit6:3>, SYSCR0<bit1:0>, SYSCR1<bit7:4>, and SYSCR2<bit6> are RD as undefined value.

Figure 3.3.3 SFR for System Clock

		7	6	5	4	3	2	1	0
PLLCR (10E8H)	Bit symbol	PLLON	FCSEL	LWUPFG					
	Read/Write	R/W	R/W	R					
	After reset	0	0	0					
	Function	0: PLL stop 1: PLL run	0: fc = OSCH 1: fc = PLL (× 4)	PLL warm-up flag 0: Don't end up or stop 1: End up					

Note: Logic of PLLCR0<LWUPFG> is different DFM of 900/L1.

Figure 3.3.4 SFR for PLL

		7	6	5	4	3	2	1	0
EMCCR0 (10E3H)	Bit symbol	PROTECT					EXTIN	DRVOSCH	–
	Read/Write	R					R/W	R/W	R/W
	After reset	0					0	1	1
	Function	Protect 0: OFF 1: ON					1: fc external clock	fc oscillator driver ability 1: Normal 0: Weak	Always write "1".
EMCCR1 (10E4H)	Bit symbol	Switching the protect ON/OFF by write to following 1st-KEY, 2nd-KEY 1st-KEY: EMCCR1 = 5AH, EMCCR2 = A5H in succession write 2nd-KEY: EMCCR1 = A5H, EMCCR2 = 5AH in succession write							
	Read/Write								
	After reset								
	Function								
EMCCR2 (10E5H)	Bit symbol								
	Read/Write								
	After reset								
	Function								

Figure 3.3.5 SFR for Noise

3.3.3 System Clock Controller

The system clock controller generates the system clock signal (f_{SYS}) for the CPU core and internal I/O. It is used as input that fc outputted from high-frequency oscillation circuit and PLL (Clock doubler) SYSCR1<GEAR2:0>, SYSCR1<GEAR2:0> sets the high-frequency clock gear to either 1, 2, 4, 8, or 16 (fc, fc/2, fc/4, fc/8, or fc/16). These functions can reduce the power consumption of the equipment in which the device is installed.

Single clock mode is set by resetting, initialized to <GEAR2:0> = "100". This setting will cause the system clock (f_{SYS}) to be set to fc/32 (fc/16×1/2).

For example, f_{SYS} is set to 1.25 MHz when the 40MHz oscillator is connected to the X1 and X2 pins.

(1) Clock gear controller

f_{FPH} is set according to the contents of the clock gear select register SYSCR1<GEAR2:0> to either fc, fc/2, fc/4, fc/8, or fc/16. Using the clock gear to select a lower value of f_{FPH} reduces power consumption.

Example:
Changing to a high-frequency gear

```
SYSCR1      EQU    10E1H
            LD     (SYSCR1), XXXX0100B     ;  Changes system clock fSYS to fc/32.
```

X: Don't care

(High-speed clock gear changing)

To change the clock gear, write the register value to the SYSCR1<GEAR2:0> register. It is necessary the warm-up time until changing after writing the register value.

There is the possibility that the instruction next to the clock gear changing instruction is executed by the clock gear before changing. To execute the instruction next to the clock gear switching instruction by the clock gear after changing, input the dummy instruction as follows (Instruction to execute the write cycle).

Example:

```
SYSCR1      EQU    10E1H
            LD     (SYSCR1), XXXX0001B     ;  Changes fSYS to fc/4.
            LD     (DUMMY), 00H            ;  Dummy instruction.
                   Instruction to be executed
                   after clock gear has changed.
```

3.3.4 Clock Doubler (PLL)

PLL outputs the f_{PLL} clock signal, which is four times as fast as f_{OSCH}. A reset initializes PLL to stop status, setting to PLLCR register is needed before use.

Like an oscillator, this circuit requires time to stabilize. This is called the lockup time.

Note 1: Input frequency limitation for PLL

The limitation of input frequency (High-frequency oscillation) for PLL is the following.

f_{OSCH} = 4 to 10 MHz (Vcc = 3.0 V to 3.6 V)

Note 2: PLLCR<LWUPFG>

The logic of PLLCR<LUPFG> is different from 900/L1's DFM.

Be careful to judge an end of lockup time.

The following is a setting example for PLL starting and PLL stopping.

Example 1: PLL starting

```
PLLCR       EQU     10E8H

            LD      (PLLCR), 10XXXXXXXB     ;   Enables PLL operation and starts lockup.
LUP:        BIT     5, (PLLCR)              ;
            JR      Z, LUP                  ;   Detects end of lockup.
            LD      (PLLCR), 11XXXXXXB      ;   Changes fc from 10 MHz to 40 MHz.
```

X: Don't care

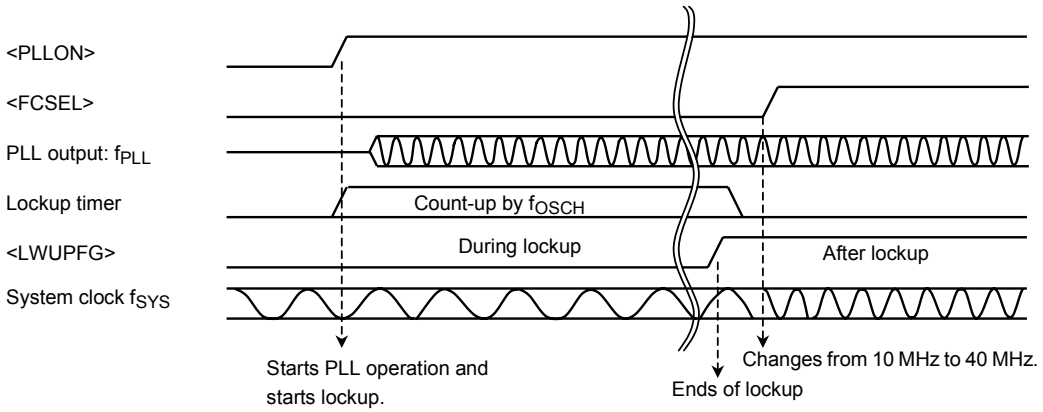

Example 2: PLL stopping

```
PLLCR    EQU   10E8H
         LD    (PLLCR), 10XXXXXXB    ;   Changes fc from 40 MHz to10 MHz.
         LD    (PLLCR), 00XXXXXXB    ;   Stop PLL.
```

X: Don't care

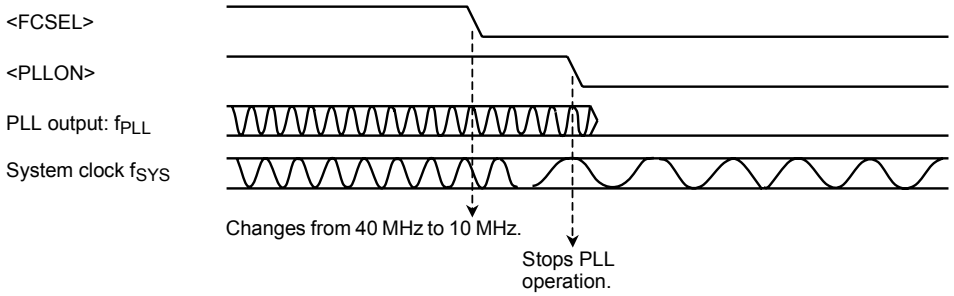

Limitation point on the use of PLL

1. It's prohibited to execute PLL enable/disable control in the SLOW mode (fs) (Writing to PLLCR0 and PLLCR1). You should control PLL in the NORMAL mode.
2. If you stop PLL operation during using PLL , you should execute following setting in the same order.

   LD (PLLCR0), 00H ; Change the clock f_{PLL} to f_{OSCH}

   LD (PLLCR1), 00H ; PLL stop
3. If you stop high frequency oscillator during using PLL, you should stop PLL before you stop high frequency oscillator.

(1) Examples of settings are below.

Start Up / Change Control

(OK) Low frequency oscillator operation mode(f_s) (high frequency oscillator STOP)

→ High frequency oscillator start up → High frequency oscillator operation mode(f_{OSCH})

→PLL start up → PLL use mode (f_{PLL})

```
        LD    (SYSCR0),  11---1--B     ; High frequency oscillator start/ Warming up start
WUP:    BIT   2,(SYSCR0)               ;
        JR    NZ,WUP                   ;  } Check for the flag of warming up end
        LD    (SYSCR1),  ----0---B     ; Change the system clock fs to fOSCH
        LD    (PLLCR1),1-------B       ; PLL start up / lock up start
LUP:    BIT   5, (PLLCR0)              ;
        JR    Z,LUP                    ;  } Check for the flag of lock up end
        LD    (PLLCR0),-1------B       ; Change the system clock fOSCH to fPLL
```

(OK) Low frequency oscillator operation mode(f_s) (high frequency oscillator Operate)

→ High frequency oscillator operation mode(f_{OSCH})→PLL start up → PLL use mode (f_{PLL})

```
        LD    (SYSCR1),  ----0---B     ; Change the system clock fs to fOSCH
        LD    (PLLCR1), 1-------B      ; PLL start up / lock up start
LUP:    BIT   5, (PLLCR0)             ;
        JR    Z,LUP                   ; } Check for the flag of lock up end
        LD    (PLLCR0),-1------B      ; Change the system clock fOSCH to fPLL
```

(NG) Low frequency oscillator operation mode(f_s) (high frequency oscillator STOP)

→ High frequency oscillator start up → PLL start up → PLL use mode (f_{PLL})

```
        LD    (SYSCR0),11---1--B      ; High frequency oscillator start/ Warming up start
WUP:    BIT   2,(SYSCR0)              ;
        JR    NZ,WUP                  ; } Check for the flag of warming up end
        LD    (PLLCR1),1-------B      ; PLL start up / lock up start
LUP:    BIT   5, (PLLCR0)             ;
        JR    Z,LUP                   ; } Check for the flag of lock up end
        LD    (PLLCR0),-1------B      ; Change the internal clock fOSCH to fPLL
        LD    (SYSCR1),   -----0---B  ; Change the system clock fs to fPLL
```

(2) Change / Stop Control

(OK) PLL use mode (f_{PLL})→ High frequency oscillator operation mode(f_{OSCH})→ PLL Stop → Low frequency oscillator operation mode(f_s)→High frequency oscillator stop

```
LD    (PLLCR0),-0------B    ; Change the system clock fPLL to fOSCH
LD    (PLLCR1),0-------B    ; PLL stop
LD    (SYSCR1),  ----1---B  ; Change the system clock fOSCH to fs
LD    (SYSCR0),  0-------B  ; High frequency oscillator stop
```

(NG) PLL use mode (f_{PLL})→ Low frequency oscillator operation mode(f_s)→ PLL stop →High frequency oscillator stop

```
LD    (SYSCR1),  ----1---B  ; Change the system clock fPLL to fS
LD    (PLLCR0),   -0------B ; Change the internal clock (fC) fPLL to fOSCH
LD    (PLLCR1),   0-------B ; PLL stop
LD    (SYSCR0),  0-------B  ; High frequency oscillator stop
```

(OK) PLL use mode (f_{PLL})→Set the STOP mode →High frequency oscillator operation mode (f_{OSCH})→ PLL stop → HALT(High frequency oscillator stop)

```
LD    (SYSCR2),  ----01--B  ; Set the STOP mode
                            (This command can execute before use of PLL)
LD    (PLLCR0),-0------B    ; Change the system clock fPLL to fOSCH
LD    (PLLCR1), 0------B    ; PLL stop
HALT                        ; Shift to STOP mode
```

(NG) PLL use mode (f_{PLL})→Set the STOP mode→ HALT(High frequency oscillator stop)

```
LD    (SYSCR2),  ----01--B  ; Set the STOP mode
                            (This command can execute before use of PLL)
HALT                        ; Shift to STOP mode
```

3.3.5 Noise Reduction Circuits

Noise reduction circuits are built in for reduction EMI (Unnecessary radius noise) and reinforcement EMS (Measure of endure noise), allowing implementation of the following features.

(1) Reduced drivability for high-frequency oscillator

(2) Single drive for high-frequency oscillator

(3) SFR protection of register contents

These functions need setting by EMCCR0 to EMCCR2.

(1) Reduced drivability for high-frequency oscillator

(Purpose)

Reduces noise and power for oscillator when connect oscillator to outside.

(Block diagram)

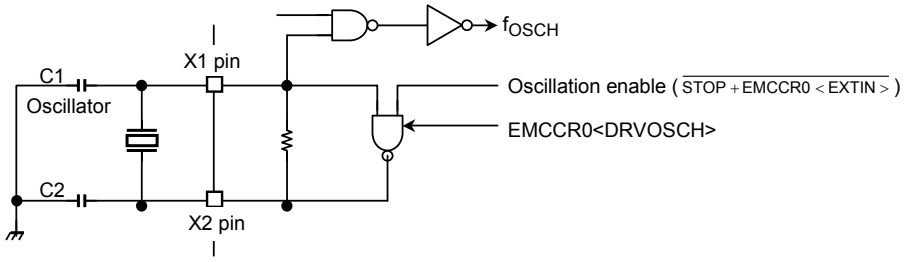

(Setting method)

The drivability of the oscillator is reduced by writing "0" to EMCCR0<DRVOSCH> register. By reset, <DRVOSCH> is initialized to "1" and the oscillator starts oscillation by normal drivability when the power supply is on.

Note: When use drivability reduction function of oscillator, please use in case of f_{OSCH} = 4 MHz to 10 MHz condition.

(2) Single drive for high-frequency oscillator

(Purpose)

Not need twin-drive and protect mistake operation by inputted noise to X2 pin when the external oscillator is used.

(Block diagram)

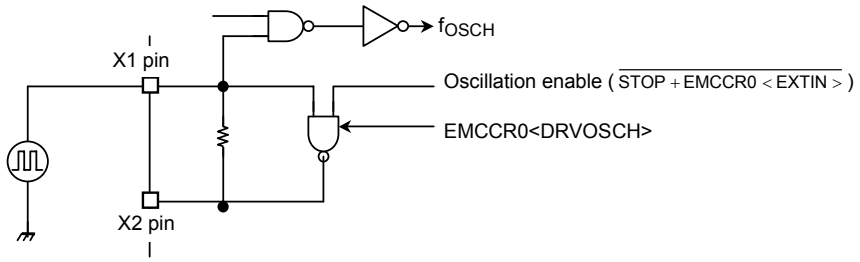

(Setting method)

The oscillator is disabled and starts operation as buffer by writing "1" to EMCCR0<EXTIN> register. X2 pin is always outputted "1".

By reset, <EXTIN> is initialized to "0".

(3) Runaway provision with SFR protection register

(Purpose)

Provision in runaway of program by noise mixing.

Write operation to specified SFR is prohibited so that provision program in runaway prevents that is in the state which is fetch impossibility by stopping of clock, memory control register (Memory controller) is changed.

And error handling in runaway becomes easy by INTP0 interruption.

Specified SFR list

1. Memory controller
   B0CSL/H, B1CSL/H, B2CSL/H, B3CSL/H, BEXCSL/H,
   MSAR0, MSAR1, MSAR2, MSAR3,
   MAMR0, MAMR1, MAMR2, MAMR3, and PMEMCR
2. Clock gear (EMCCR1, EMCCR2 write enable)
   SYSCR0, SYSCR1, SYSCR2, and EMCCR0

(Operation explanation)

Execute and release of protection (write operation to specified SFR) becomes possible by setting up a double key to EMCCR1 and EMCCR2 registers.

(Double key)
1st-KEY: Succession writes in 5AH at EMCCR1 and A5H at EMCCR2.
2nd-KEY: Succession writes in A5H at EMCCR1 and 5AH at EMCCR2.

A state of protection can be confirmed by reading EMCCR0<PROTECT>.

By reset, protection becomes OFF.

And INTP0 interruption occurs when write operation to specified SFR was executed with protection on state.

3.3.6 Standby Controller

(1) HALT modes

When the HALT instruction is executed, the operating mode switches to IDLE2, IDLE1, or STOP mode, depending on the contents of the SYSCR2<HALTM1:0> register.

The subsequent actions performed in each mode are as follows:

a. IDLE2: Only the CPU halts.
The internal I/O is available to select operation during IDLE2 mode by setting the following register.
Table 3.3.1 shows the registers of setting operation during IDLE2 mode.

Table 3.3.1 SFR Seting Operation during IDLE2 Mode

Internal I/O	SFR
TMRA01	TA01RUN<I2TA01>
TMRA23	TA23RUN<I2TA23>
TMRB0	TB0RUN<I2TB0>
TMRB1	TB1RUN<I2TB1>
SIO0	SC0MOD1<I2S0>
SIO1	SC1MOD1<I2S1>
AD converter	ADMOD1<I2AD>
WDT	WDMOD<I2WDT>
SBI	SBI0BR0<I2SBI0>

b. IDLE1: Only internal oscillator operate.

c. STOP: All internal circuit stop.

The operation of each of the different HALT modes is described in Table 3.3.2.

Table 3.3.2 Each Block Operation in HALT Mode

HALT Mode		IDLE2	IDLE1	STOP
SYSCR2<HALTM1:0>		11	10	01
Operation block	CPU	Stop		
	I/O port	Keep the state when the HALT instruction is executed.	Refer Table 3.3.5, Table 3.3.6	
	TMRA, TMRB	* Selection enable operation block to programmable	Stop	
	SIO, *SBI			
	AD converter			
	WDT			

*: Except clocked-synchronous 8-bit SIO mode for SBI.

(2) How to release the HALT mode

These halt states can be released by resetting or requesting an interrupt. The halt release sources are determined by the combination between the states of interrupt mask register <IFF2:0> and the HALT modes. The details for release the halt status are shown in Table 3.3.3.

- Released by requesting an interrupt

  The operating released from the HALT mode depends on the interrupt enabled status. When the interrupt request level set before executing the HALT instruction exceeds the value of interrupt mask register, the interrupt due to the source is processed after release the HALT mode, and CPU status executing an instruction that follows the HALT instruction. When the interrupt request level set before executing the HALT instruction is less than the value of the interrupt mask register, release the HALT mode is not executed. (In non-maskable interrupts, interrupt processing is processed after release the HALT mode regardless of the value of the mask register.) However only for INT0 to INT3 interrupts, even if the interrupt request level set before executing the HALT instruction is less than the value of the interrupt mask register, release the the HALT mode is executed. In this case, interrupt processing, and CPU starts executing the instruction next to the HALT instruction, but the interrupt request flag is held at "1".

- Release by resetting

  Release all halt status is executed by resetting.

  When the STOP mode is released by RESET, it is necessary enough resetting time (Refer Table 3.3.4) to set the operation of the oscillator to be stable.

  When release the HALT mode by resetting, the internal RAM data keeps the state before the "HALT" instruction is executed. However the other settings contents are initialized. (Release due to interrupts keeps the state before the "HALT" instruction is executed.)

Table 3.3.3 Source of Halt State Release and Halt Release Operation

Status of Received Interrupt			Interrupt Enable (Interrupt level) ≥ (Interrupt mask)			Interrupt Disable (Interrupt level) < (Interrupt mask)		
HALT Mode			Programmable IDLE2	IDLE1	STOP	Programmable IDLE2	IDLE1	STOP
Source of HALT state release	Interrupt	NMI	♦	♦	♦	–	–	–
		INTWDT	♦	×	×	–	–	–
		INT0 to 3 (Note1)	♦	♦	♦*1	○	○	○*1
		INT4 to 5	♦	×	×	×	×	×
		INTTA0 to 3,	♦	×	×	×	×	×
		INTTB00, 01, 10, 11, O0, O1	♦	×	×	×	×	×
		INTRX0 to 1, TX0 to 1	♦	×	×	×	×	×
		INTAD	♦	×	×	×	×	×
		INTSBE0	♦	×	×	×	×	×
	Reset		Initialize LSI					

♦: After release the HALT mode, CPU starts interrupt processing.

○: After release the HALT mode, CPU resumes executing starting from instruction following the HALT instruction. (Interrupt don't process.)

×: It can not be used to release the HALT mode.

–: The priority level (Interrupt request level) of non-maskable interrupts is fixed to 7, the highest priority level. There is not this combination type.

*1: Release the HALT mode is executed after passing the warm-up time.

Note 1: When the HALT mode is released by INT0 to INT3 interrupts of the level mode in the interrupt enabled status, hold this level until starting interrupt processing. Changing level before holding level, interrupt processing is correctly started.

Note 2: When use external interrupt INT4 to INT5 are used during IDLE2 mode, set 16-bit timer RUN register TB1RUN<I2TB1> to "1".

(Example release HALT mode)

An INT0 interrupt release the halt state when the device is in IDLE1 mode.

```
Address
8203H    LD    (IIMC), 00H      ;  Selects INT0 interrupt rising edge.
8206H    LD    (INTE0AD), 06H   ;  Sets INT0 interrupt level to 6.
8209H    EI    5                ;  Sets CPU interrupt level to 5.
820BH    LD    (SYSCR2), 28H    ;  Sets HALT mode to IDLE1 mode.
820EH    HALT                   ;  Halts CPU.

INT0                                          INT0 interrupt routine
                                                       RETI
820FH    LD    XX, XX
```

(3) Operation

a. IDLE2 mode

In IDLE2 mode only specific internal I/O operations, as designated by the IDLE2 setting register, can take place. Instruction execution by the CPU stops.

Figure 3.3.6 illustrates an example of the timing for clearance of the IDLE2 mode halt state by an interrupt.

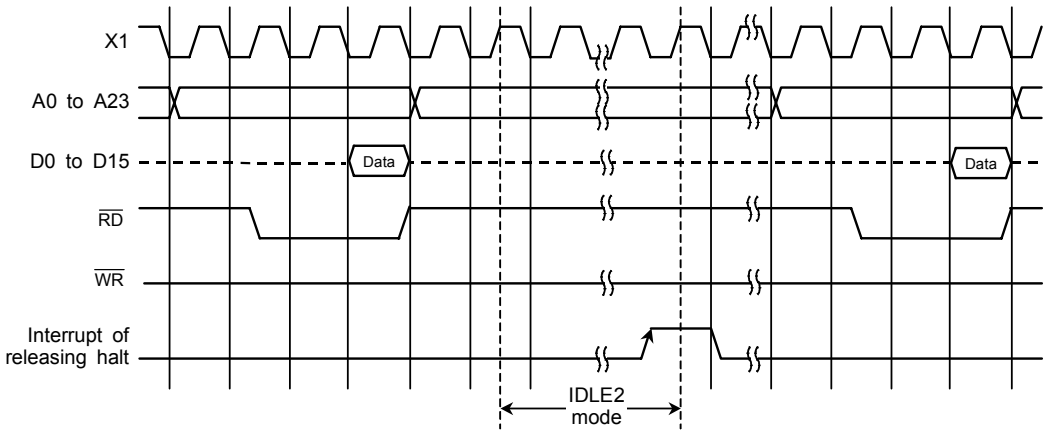

Figure 3.3.6 Timing Chart for IDLE2 Mode Halt State Released by Interrupt

b. IDLE1 mode

In IDLE1 mode, only the internal oscillator operate. The system clock stops.

And, pin state in IDLE1 mode depend on setting SYSCR2<SELDRV, DRVE> register. Table 3.3.5, Table 3.3.6 shows pin state in IDLE1 mode.

In the halt state, the interrupt request is sampled asynchronously with the system clock; however, clearance of the halt state (e.g., restart of operation) is synchronous with it.

Figure 3.3.7 shows the timing for release of the IDLE1 mode halt state by an interrupt.

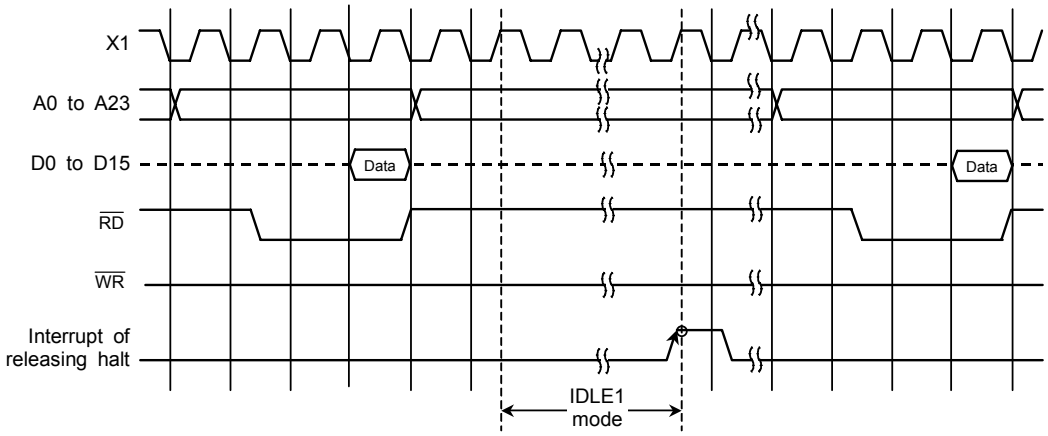

Figure 3.3.7 Timing Chart for IDLE1 Mode Halt State Released by Interrupt

c. STOP mode

When STOP mode is selected, all internal circuits stop, including the internal oscillator pin status in STOP mode depends on the settings in the SYSCR2<SELDRV, DRVE> register. Table 3.3.5, Table 3.3.6 shows the state of these pins in STOP mode.

After STOP mode has been released system clock output starts when the warm-up time has elapsed, in order to allow oscillation to stabilize. Warm-up time set by SYSCR2<WUPTM1:0> register. See the sample warm-up times in Table 3.3.4.

Figure 3.3.8 illustrates the timing for release of the STOP mode halt state by an interrupt.

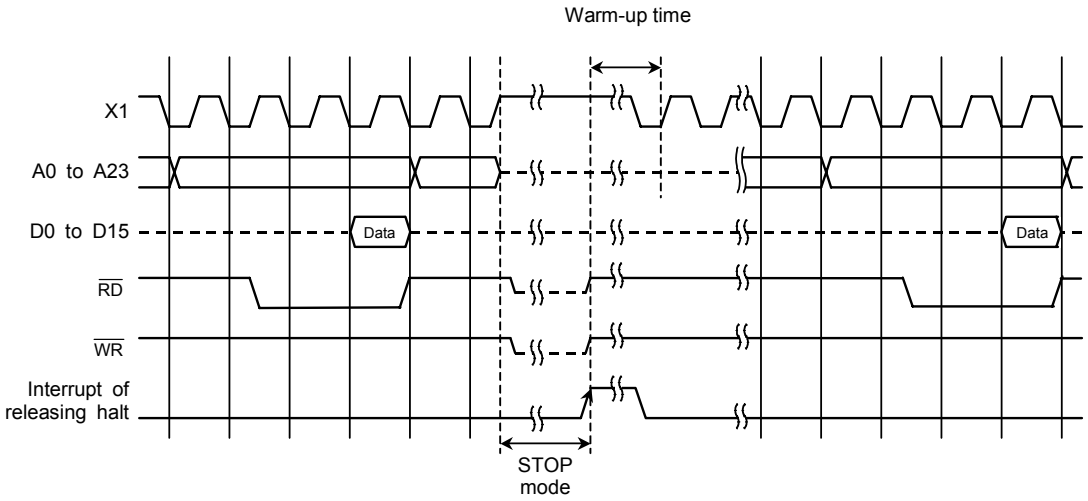

Figure 3.3.8 Timing Chart for STOP Mode Halt State Released by Interrupt

Table 3.3.4 Sample Warm-up Times after Rrelease of STOP Mode

at f_{OSCH} = 10 MHz

SYSCR2<WUPTM1:0>		
01 (2^8)	10 (2^{14})	11 (2^{16})
25.6 μs	1.638 ms	6.554 ms

Table 3.3.5 Input Buffer State Table

Port Name	Input Function Name	Input Buffer State								
		During Reset	Input Buffer State		Input Buffer State		In HALT mode(IDLE1/STOP)			
							Condition A (Note)		Condition B (Note)	
			When Used as function Pin	When Used as Input Port	When Used as function Pin	When Used as Input Port	When Used as function Pin	When Used as Input Port	When Used as function Pin	When Used as Input Port
D0-7	D0-7	OFF	ON upon external read	–	OFF	–	OFF	–	OFF	–
P10-17	D8-15			ON		OFF		OFF		OFF
P40-47	–	OFF	–	ON	–	OFF	–	OFF	–	OFF
P50-57	–									
P60-67	–									
P76	WAIT	ON	ON	ON	OFF	OFF	OFF	OFF	OFF	OFF
P90	SCK	ON	ON	ON	ON	OFF	OFF	OFF	OFF	OFF
P91	SDA									
P92	SI SCL									
PA0-7(*1)	–	ON	–	ON	–	ON	–	ON	–	ON
PC0	TA0IN	ON	ON	ON	ON	OFF	OFF	OFF	OFF	OFF
PC1	INT1						ON		ON	
PC3	INT0	ON	ON	ON	ON	ON	ON	ON	ON	ON
PC5	INT2	ON	ON	ON	ON	OFF	ON	OFF	ON	OFF
PC6	INT3									
PD0	INT4, TB1IN0	ON	ON	ON	ON	OFF	OFF	OFF	OFF	OFF
PD1	INT5, TB1IN1									
PD2	–	ON	–	ON	–	OFF	–	OFF	–	OFF
PD3	–									
PF0	–	ON	–	ON	–	OFF	–	OFF	–	OFF
PF1	RXD0		ON		ON	ON	OFF		OFF	
PF2	SCLK0, CTS0									
PF3	–		–		–	OFF	–		–	
PF4	RXD1		ON		ON	ON	OFF		OFF	
PF5	SCLK1, CTS1									
PF6	–	ON	–	ON	–	ON	–	OFF	–	OFF
PF7	–									
PG0-2, PG4-7(*2)	–	OFF	–	ON upon port read	–	OFF	–	OFF	–	OFF
PG3(*2)	ADTRG		ON		ON		ON		ON	
/NMI	–	ON	ON	–	ON	–	ON	–	ON	–
RESET(*1)	–									
AM0,1	–									
X1										

ON: The buffer is always turned on. A current flows the input buffer if the input pin is not driven.

OFF: The buffer is always turned off.

－: No applicable

*1:Port having a pull-up/pull-down resistor.

*2:AIN input does not cause a current to flow through the buffer.

(Note) Condition A/B are as follows.

(SYSCR2) register setting		HALT mode	
<DRVE>	<SELDRV>	IDLE1	STOP
0	0	Condition B	Condition A
0	1	Condition A	
1	0	Condition B	Condition B
1	1		

Table 3.3.6 Output Buffer State Table

Port Name	Output Function Name	Output Buffer State								
		During Reset	When the CPU is Operating		In HALT mode(IDLE2)		In HALT mode (IDLE1/STOP)			
							Condition A (Note)		Condition B (Note)	
			When Used as Function Pin	When Used as Output Port	When Used as Function Pin	When Used as Output Port	When Used as Function Pin	When Used as Output Port	When Used as Function Pin	When Used as Output Port
D0-7	D0-7	OFF	ON upon external read	–	OFF	–	OFF	–	OFF	–
P10-17	D8-15			ON		ON		ON		ON
P40-47	A0-7	ON	ON	ON	ON	ON	OFF	OFF	ON	ON
P50-57	A8-15									
P60-67	A16-23									
P70	RD	ON	ON	ON	ON	ON	OFF	OFF	ON	ON
P71	WRILL									
P72	WRLU									
P73	WRUL									
P74	WRUU									
P75	R/W									
P76	–	OFF	–		–		–		–	
P80	CS0	ON	ON	ON	ON	ON	OFF	OFF	ON	ON
P81	CS1									
P82	CS2									
P83	CS3									
P90	SCK	OFF	ON	ON	ON	ON	OFF	OFF	ON	ON
P91	SO									
P92	SCL									
PC0	–	OFF	–	ON	–	ON	–	OFF	–	ON
PC1	TA1OUT		ON		ON		OFF		ON	
PC3	–		–		–		–		–	
PC5	TA3OUT		ON		ON		OFF		ON	
PC6	TB0OUT									
PD0	–	OFF	–	ON	–	ON	–	OFF	–	ON
PD1	–									
PD2	TB1OUT0	OFF	ON	ON	ON	ON	OFF	OFF	ON	ON
PD3	TB1OUT1									
PF0	TXD0	OFF	ON	ON	ON	ON	OFF	OFF	ON	ON
PF1	–		–		–		–		–	
PF2	SCLK0		ON		ON		OFF		ON	
PF3	TXD1									
PF4	–		–		–		–		–	
PF5	SCLK1		ON		ON		OFF		ON	
PF6	–	OFF	–	ON	–	ON	–	OFF	–	ON
PF7	–									
X2	–			–	ON	–	IDLE1: ON, STOP: High level output			

ON: The buffer is always turned on. When the bus is released, however ,output buffers for some pins are turned off.

OFF: The buffer is always turned off.

–: No applicable

(Note) Condition A/B are as follows.

(SYSCR2) register setting		HALT mode	
<DRVE>	<SELDRV>	IDLE1	STOP
0	0	Condition B	Condition A
0	1	Condition A	
1	0	Condition B	Condition B
1	1		

3.4 Interrupt

Interrupts of TLCS-900/H1 are controlled by the CPU interrupt mask flip-flop (IFF2:0) and by the built-in interrupt controller.

The TMP92CM22 has a total of 41 interrupts divided into the following types:

- Interrupts generated by CPU: 9 sources
  (Software interrupts: 8 sources, illegal instruction interrupt: 1 source)
- External interrupts ($\overline{NMI}$ and INT0 to INT5): 7 sources
- Internal I/O interrupts: 17 sources
- High-speed DMA interrupts: 8 sources

A individual interrupt vector number (Fixed) is assigned to each interrupt.

One of seven priority level (Variable) can be assigned to each maskable interrupt.

The priority level of non-maskable interrupts are fixed at 7 as the highest level.

When an interrupt is generated, the interrupt controller sends the priority of that interrupt to the CPU. If multiple interrupts are generated simultaneously, the interrupt controller sends the interrupt with the highest priority to the CPU. (The highest priority is level 7 using for non-maskable interrupts.)

The CPU compares the priority level of the interrupt with the value of the CPU interrupts mask register <IFF2:0>. If the priority level of the interrupt is higher than the value of the interrupt mask register, the CPU accepts the interrupt.

The interrupt mask register <IFF2:0> value can be updated using the value of the EI instruction (EI num sets <IFF2:0> data to num).

For example, specifying “EI3” enables the maskable interrupts which priority level set in the interrupt controller is 3 or higher, and also non-maskable interrupts.

Operationally, the DI instruction (<IFF2:0> = 7) is identical to the EI7 instruction. DI instruction is used to disable maskable interrupts because of the priority level of maskable interrupts is 0 to 6. The EI instruction is valid immediately after execution.

In addition to the above general-purpose interrupt processing mode, TLCS-900/H1 has a micro DMA interrupt processing mode as well. The CPU can transfer the data (1/2/4 bytes) automatically in micro DMA mode, therefore this mode is used for speed-up interrupt processing, such as transferring data to the internal or external peripheral I/O. Moreover, TMP92CM22 has software start function for micro DMA processing request by the software not by the hardware interrupt.

Figure 3.4.1 shows the overall interrupt processing flow.

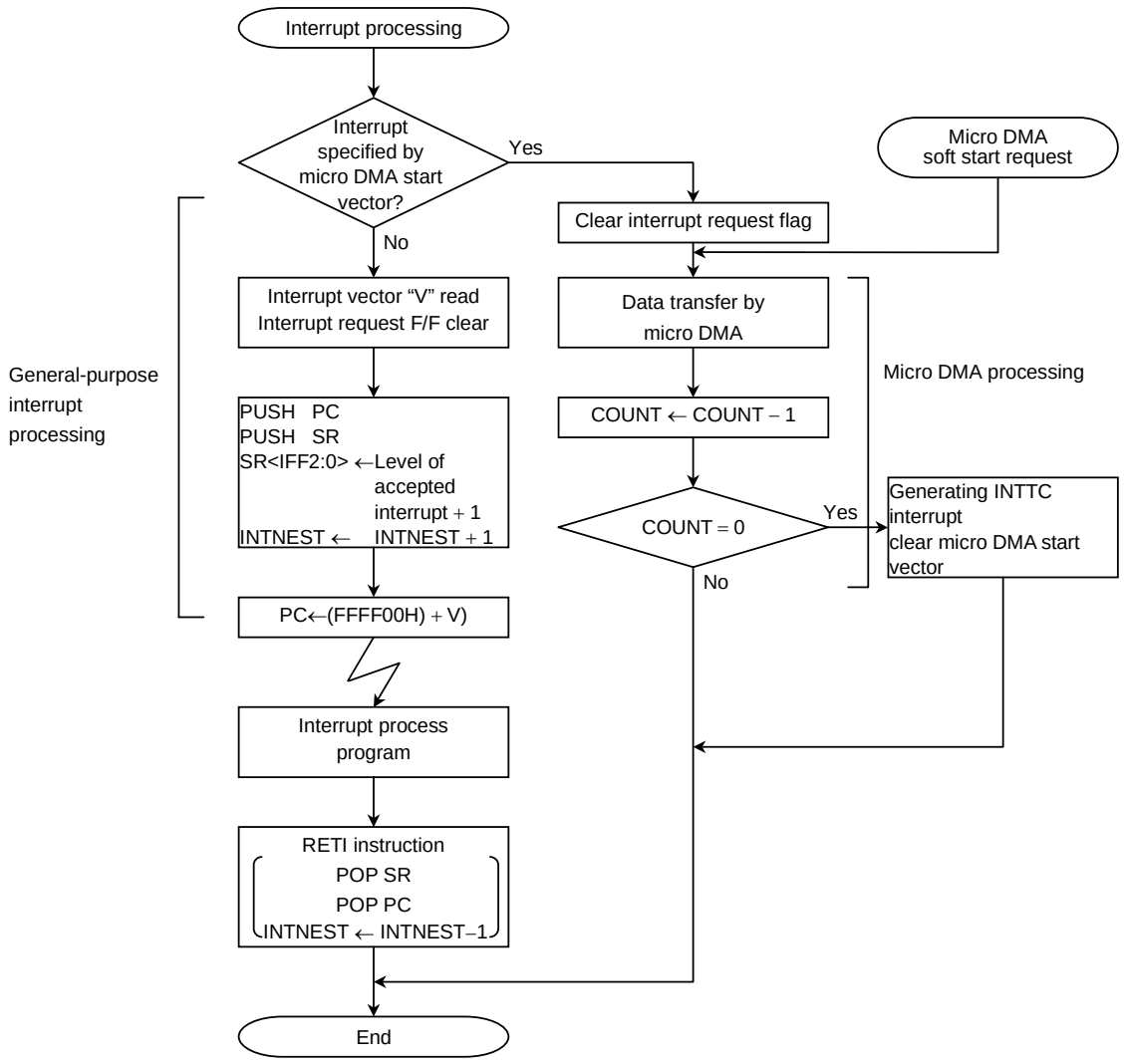

Figure 3.4.1 Interrupt and Micro DMA Processing Sequence

3.4.1 General-purpose Interrupt Processing

When the CPU accepts an interrupt, it usually performs the following sequence of operations. That is also the same as TLCS-900/L, TLCS-900/H, and TLCS-900/L1.

(1) The CPU reads the interrupt vector from the interrupt controller.
If the same level interrupts occur simultaneously, the interrupt controller generates an interrupt vector in accordance with the default priority and clears the interrupt request.
(The default priority is already fixed for each interrupt: The smaller vector value has the higher priority level.)

(2) The CPU pushes the value of program counter (PC) and status register (SR) onto the stack area (indicated by XSP).

(3) The CPU sets the value which is the priority level of the accepted interrupt plus 1 (+1) to the interrupt mask register <IFF2:0>. However, if the priority level of the accepted interrupt is 7, the register's value is set to 7.

(4) The CPU increases the interrupt nesting counter INTNEST by 1 (+1).

(5) The CPU jumps to the address indicated by the data at address "FFFF00H + Interrupt vector" and starts the interrupt processing routine.

When the CPU completed the interrupt processing, use the RETI instruction to return to the main routine. RETI restores the contents of program counter (PC) and status register (SR) from the stack and decreases the interrupt nesting counter INTNEST by 1(–1).

Non-maskable interrupts cannot be disabled by a user program. Maskable interrupts, however, can be enabled or disabled by a user program. A program can set the priority level for each interrupt source. (A priority level setting of 0 or 7 will disable an interrupt request.)

If an interrupt request which has a priority level equal to or greater than the value of the CPU interrupt mask register <IFF2:0> comes out, the CPU accepts its interrupt. Then, the CPU interrupt mask register <IFF2:0> is set to the value of the priority level for the accepted interrupt plus 1(+1).
Therefore, if an interrupt is generated with a higher level than the current interrupt during it's processing, the CPU accepts the later interrupt and goes to the nesting status of interrupt processing.

Moreover, if the CPU receives another interrupt request while performing the said (1) to (5) processing steps of the current interrupt, the latest interrupt request is sampled immediately after execution of the first instruction of the current interrupt processing routine. Specifying DI as the start instruction disables maskable interrupt nesting.

A reset initializes the interrupt mask register <IFF2:0> to "7", disabling all maskable interrupts.

Table 3.4.1 shows the TMP92CM22 interrupt vectors and micro DMA start vectors. The address FFFF00H to FFFFFFH (256 bytes) is assigned for the interrupt vector area.

Table 3.4.1 TMP92CM22 Interrupt Vectors and Micro DMA Start Vectors

Default Priority	Type	Interrupt Source	Vector Value	Address Refer to Vector	Micro DMA Start Vector
1	Non-maskable	Reset or “SWI0” instruction	0000H	FFFF00H	
2		“SWI1” instruction	0004H	FFFF04H	
3		“Illegal instruction” or “SWI2” instruction	0008H	FFFF08H	
4		“SWI3” instruction	000CH	FFFF0CH	
5		“SWI4” instruction	0010H	FFFF10H	
6		“SWI5” instruction	0014H	FFFF14H	
7		“SWI6” instruction	0018H	FFFF18H	
8		“SWI7” instruction	001CH	FFFF1CH	
9		NMI: External interrupt input pin	0020H	FFFF20H	
10		INTWD: Watchdog Timer	0024H	FFFF24H	
-	Maskable	Micro DMA (Note 2)	–	–	–
11		INT0: External interrupt input pin	0028H	FFFF28H	0AH (Note 1)
12		INT1: External interrupt input pin	002CH	FFFF2CH	0BH (Note 1)
13		INT2: External interrupt input pin	0030H	FFFF30H	0CH (Note 1)
14		INT3: External interrupt input pin	0034H	FFFF34H	0DH (Note 1)
15		(Reserved)	0038H	FFFF38H	0EH
16		(Reserved)	003CH	FFFF3CH	0FH
17		(Reserved)	0040H	FFFF40H	10H
18		(Reserved)	0044H	FFFF44H	11H
19		(Reserved)	0048H	FFFF48H	12H
20		(Reserved)	004CH	FFFF4CH	13H
21		INTP0: Protect 0 (WR to special SFR)	0050H	FFFF50H	14H
22		(Reserved)	0054H	FFFF54H	15H
23		INTTA0: 8-bit timer 0	0058H	FFFF58H	16H
24		INTTA1: 8-bit timer 1	005CH	FFFF5CH	17H
25		INTTA2: 8-bit timer 2	0060H	FFFF60H	18H
26		INTTA3: 8-bit timer 3	0064H	FFFF64H	19H
27		INTTB00: 16-bit timer 0	0068H	FFFF68H	1AH
28		INTTB01: 16-bit timer 0	006CH	FFFF6CH	1BH
29		(Reserved)	0070H	FFFF70H	1CH
30		(Reserved)	0074H	FFFF74H	1DH
31		INTTBO0: 16-bit timer 0 (Overflow)	0078H	FFFF78H	1EH
32		(Reserved)	007CH	FFFF7CH	1FH
33		INTRX0: Serial 0 (SIO0) receive	0080H	FFFF80H	20H (Note 1)
34		INTTX0: Serial 0 (SIO0) transmission	0084H	FFFF84H	21H
35		INTRX1: Serial 1 (SIO1) receive	0088H	FFFF88H	22H (Note 1)
36		INTTX1: Serial 1 (SIO1) transmission	008CH	FFFF8CH	23H
37		(Reserved)	0090H	FFFF90H	24H
38		(Reserved)	0094H	FFFF94H	25H
39		(Reserved)	0098H	FFFF98H	26H
40		(Reserved)	009CH	FFFF9CH	27H
41		(Reserved)	00A0H	FFFFA0H	28H
42		INT4: External interrupt input pin	00A4H	FFFFA4H	29H
43		INT5: External interrupt input pin	00A8H	FFFFA8H	2AH
44		INTTB10: 16-bit timer 1	00ACH	FFFFACH	2BH
45		INTTB11: 16-bit timer 1	00B0H	FFFFB0H	2CH
46		INTTBO1: 16-bit timer 1 (Overflow)	00B4H	FFFFB4H	2DH
47		(Reserved)	00B8H	FFFFB8H	2EH
48		INTSBE0: SBI I^2C bus transfer end (Channel 0)	00BCH	FFFFBCH	2FH
49		(Reserved)	00C0H	FFFFC0H	30H
50		(Reserved)	00C4H	FFFFC4H	31H
51		(Reserved)	00C8H	FFFFC8H	32H

Default Priority	Type	Interrupt Source	Vector Value	Address Refer to Vector	Micro DMA Start Vector
52	Maskable	INTAD: AD conversion end	00CCH	FFFFCCH	33H
53		INTTC0: Micro DMA end (Channel 0)	00D0H	FFFFD0H	34H
54		INTTC1: Micro DMA end (Channel 1)	00D4H	FFFFD4H	35H
55		INTTC2: Micro DMA end (Channel 2)	00D8H	FFFFD8H	36H
56		INTTC3: Micro DMA end (Channel 3)	00DCH	FFFFDCH	37H
57		INTTC4: Micro DMA end (Channel 4)	00E0H	FFFFE0H	38H
58		INTTC5: Micro DMA end (Channel 5)	00E4H	FFFFE4H	39H
59		INTTC6: Micro DMA end (Channel 6)	00E8H	FFFFE8H	3AH
60		INTTC7: Micro DMA end (Channel 7)	00ECH	FFFFECH	3BH
		(Reserved)	00F0H : 00FCH	FFFFF0H : FFFFFCH	–

Note 1 : When standing-up micro DMA, set at edge detect mode.

Note 2 : Micro DMA stands up prior to other maskable interrupt.

3.4.2 Micro DMA

In addition to general-purpose interrupt processing, the TMP92CM22 also includes a micro DMA function. Micro DMA processing for interrupt requests set by micro DMA is performed at the highest priority level for maskable interrupts (Level 6), regardless of the priority level of the interrupt source.

Micro DMA is supported 8 channels and can be transferred continuously by specifying the micro DMA burst function in the following.

(1) Micro DMA operation

When an interrupt request specified by the micro DMA start vector register is generated, the micro DMA triggers a micro DMA request to the CPU at interrupt priority highest level and starts processing the request in spite of any interrupt source's level. The micro DMA is ignored on <IFF2:0> = "7". The 8 micro DMA channels allow micro DMA processing to be set for up to 8 types of interrupts at any one time.

When micro DMA is accepted, the interrupt request flip-flop assigned to that channel is cleared.

The data are automatically transferred once (1/2/4 bytes) from the transfer source address to the transfer destination address set in the control register, and the transfer counter is decreased by 1 (–1).

If the decreased result is "0",

- CPU send micro DMA transfer end interrupt (INTTCn) to interrupt controller
- Interrupt controller is generated micro DMA transfer end interrupt
- Micro DMA start vector register is cleared to 0, the next micro DMA operation is disabled
- Micro DMA processing terminates

If the decreased result is not "0", the micro DMA processing completes if it isn't specified the say later burst mode. In this case, the micro DMA transfer end interrupt (INTTCn) aren't generated.

If an interrupt request is triggered for the interrupt source in use during the interval between the time at which the micro DMA start vector is cleared and the next setting, general-purpose interrupt processing is performed at the interrupt level set. Therefore, if the interrupt is only being used to initiate micro DMA (and not as a general-purpose interrupt), the interrupt level should first be set to 0 (e.g., interrupt requests should be disabled).

The priority of the micro DMA transfer end interrupt is defined by the interrupt level and the default priority as the same as the other maskable interrupt. If a micro DMA request is set for more than one channel at the same time, the priority is not based on the interrupt priority level but on the channel number. The smaller channel number has the higher priority (Channel 0 (High) > Channel 7 (Low)).

While the register for setting the transfer source/transfer destination addresses is a 32-bit control register, this register can only effectively output 24-bit addresses. Accordingly, micro DMA can access 16 Mbytes.

Three micro DMA transfer modes are supported: one-byte transfers, 2-byte transfer and 4-byte transfer. After a transfer in any mode, the transfer source and transfer destination addresses will either be incremented or decremented, or will remain unchanged. This simplifies the transfer of data from memory to memory, from I/O to memory, from memory to I/O, and from I/O to I/O. For details of the various transfer modes, refer Section 3.4.2 (4) "Detailed description of the transfer mode register".

Since a transfer counter is a 16-bit counter, up to 65536 micro DMA processing operations can be performed per interrupt source (Provided that the transfer counter for the source is initially set to 0000H).

Micro DMA processing can be initiated by any one of 32 different interrupts – the 31 interrupts shown in the micro DMA start vectors in Table 3.4.1 and a micro DMA soft start.

Figure 3.4.2 shows micro DMA cycle in transfer destination address INC mode (Micro DMA transfers are the same in every mode except counter mode). The conditions for this cycle are based on an external 8-bit bus, 0 waits, source/transfer destination addresses both even-numbered values.

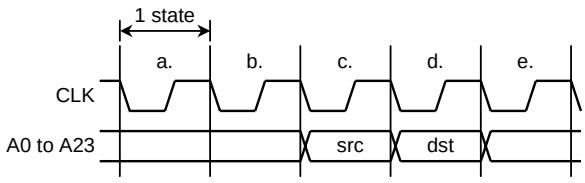

Figure 3.4.2 Timing for Micro DMA Cycle

States 1 to 2:	Instruction fetch cycle (Gets next address code). If the instruction queue buffer is FULL , this cycle becomes a dummy cycle.
State 3:	Micro DMA read cycle.
State 4:	Micro DMA write cycle.
State 5:	(The same as in state 1, 2.)

(2) Soft start function

In addition to starting the micro DMA function by interrupts, TMP92CM22 includes a micro DMA software start function that starts micro DMA on the generation of the write cycle to the DMAR register.

Writing “1” to each bit of DMAR register causes micro DMA once. At the end of transfer, the corresponding bit of the DMAR register is automatically cleared to “0”.

Only one channel can be set once for micro DMA.

When programming again “1” to the DMAR register, check whether the bit is “0” before programming “1”.

When a burst is specified by DMAB register, data is continuously transferred until the value in the micro DMA transfer counter is “0” after start up of the micro DMA.

Symbol	Name	Address	7	6	5	4	3	2	1	0
DMAR	DMA request	109H (Prohibit RMW)	DREQ7	DREQ6	DREQ5	DREQ4	DREQ3	DREQ2	DREQ1	DREQ0
			R/W							
			0	0	0	0	0	0	0	0
			1: DMA request in software							

(3) Transfer control registers

The transfer source address and the transfer destination address are set in the following registers. Data setting for these registers is done by an "LDC cr, r" instruction.

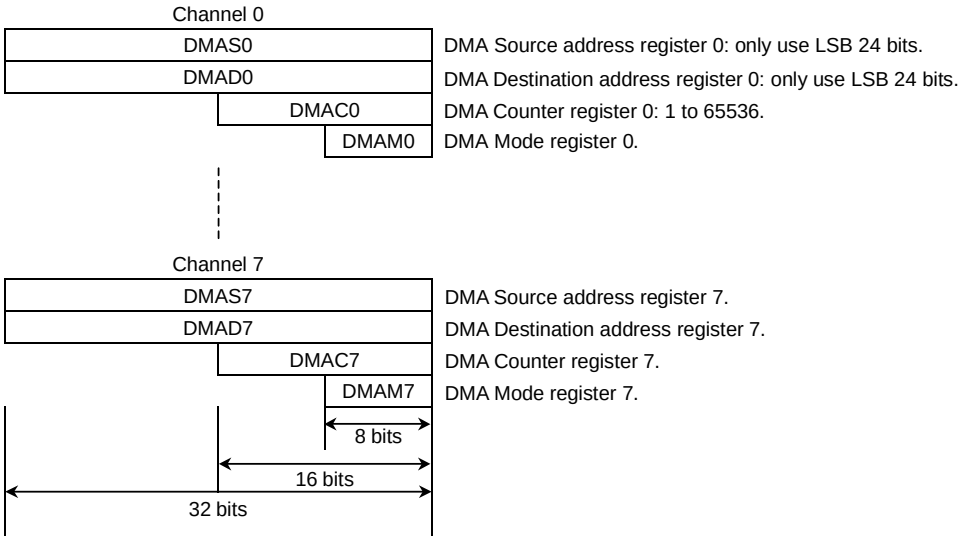

(4) Detailed description of the transfer mode register

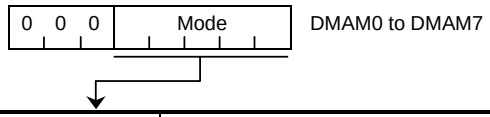

DMAM [4:0]	Operation	Execution Time
000 zz	Destination address INC mode (DMADn +) ← (DMASn) DMACn ← DMACn – 1 If DMACn = 0 then INTTC	5 states
001 zz	Source address DEC mode (DMADn –) ← (DMASn) DMACn ← DMACn – 1 If DMACn = 0 then INTTC	5 states
010 zz	Source address INC mode (DMADn) ← (DMASn +) DMACn ← DMACn – 1 If DMACn = 0 then INTTC	5 states
011 zz	Source address DEC mode (DMADn) ← (DMASn –) DMACn ← DMACn – 1 If DMACn = 0 then INTTC	5 states
100 zz	Source address INC mode (DMADn +) ← (DMASn +) DMACn ← DMACn – 1 If DMACn = 0 then INTTC	6 states
101 zz	Source address DEC mode (DMADn –) ← (DMASn –) DMACn ← DMACn – 1 If DMACn = 0 then INTTC	6 states
110 zz	Destination address fixed mode (DMADn) ← (DMASn) DMACn ← DMACn – 1 If DMACn = 0 then INTTC	5 states
111 00	Counter mode DMASn ← DMASn + 1 DMACn ← DMACn – 1 If DMACn = 0 then INTTC	5 states

ZZ : 00 = 1-byte transfer
: 01 = 2-byte transfer
: 10 = 4-byte transfer
: 11 = (Reserved)

Note 1: The execution state number shows number of best case (1-state memory access).
1 state = 50 ns (at internal 20 MHz)

Note 2: “n” shows micro DMA channel number (0 to 7).

3.4.3 Interrupt Controller Operation

The block diagram in Figure 3.4.3 shows the interrupt circuits. The left-hand side of the diagram shows the interrupt controller circuit. The right-hand side shows the CPU interrupt request signal circuit and the halt release circuit.

For each of the 33 interrupts channels there is an interrupt request flag (Consisting of a flip-flop), an interrupt priority setting register and a micro DMA start vector register. The interrupt request flag latches interrupt requests from the peripherals.

The flag is cleared to zero in the following cases:

- When reset occurs
- When the CPU reads the channel vector after accepted its interrupt
- When executing an instruction that clears the interrupt (Write DMA start vector to INTCLR register)
- When the CPU receives a micro DMA request
- When the micro DMA burst transfer is terminated

An interrupt priority can be set independently for each interrupt source by writing the priority to the interrupt priority setting register (e.g., INTE0AD or INTE12). 6 interrupt priorities levels (1 to 6) are provided. Setting an interrupt source's priority level to 0 (or 7) disables interrupt requests from that source. If interrupt request with the same level are generated at the same time, the default priority (The interrupt with the lowest priority or, in other words, the interrupt with the lowest vector value) is used to determine which interrupt request is accepted first.

The 3rd and 7th bits of the interrupt priority setting register indicate the state of the interrupt request flag and thus whether an interrupt request for a given channel has occurred.

The interrupt controller sends the interrupt request with the highest priority among the simultaneous interrupts and its vector address to the CPU. The CPU compares the priority value <IFF2:0> in the status register by the interrupt request signal with the priority value set; if the latter is higher, the interrupt is accepted. Then the CPU sets a value higher than the priority value by 1 (+1) in the CPU SR<IFF2:0>. Interrupt request where the priority value equals or is higher than the set value are accepted simultaneously during the previous interrupt routine.

When interrupt processing is completed (after execution of the RETI instruction), the CPU restores the priority value saved in the stack before the interrupt was generated to the CPU SR<IFF2:0>.

The interrupt controller also has registers (8 channels) used to store the micro DMA start vector. Writing the start vector of the interrupt source for the micro DMA processing (See Table 3.4.1), enables the corresponding interrupt to be processed by micro DMA processing. The values must be set in the micro DMA parameter register (e.g., DMAS and DMAD) prior to the micro DMA processing.

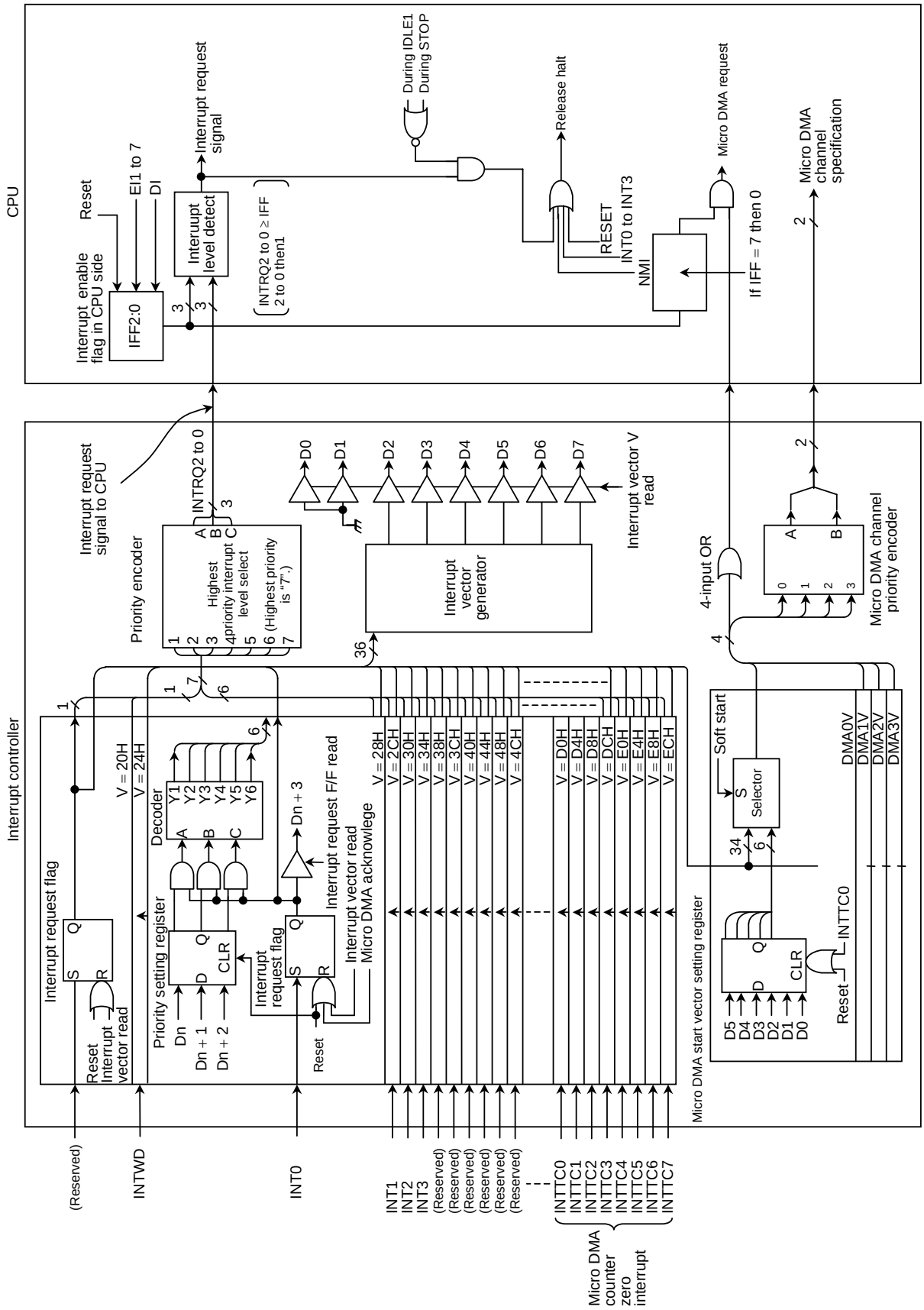

Figure 3.4.3 Block Diagram of Interrupt Controller

(1) Interrupt priority setting registers

Symbol	Name	Address	7	6	5	4	3	2	1	0
INTE12	INT1&INT2 enable	D0H	INT2				INT1			
			I2C	I2M2	I2M1	I2M0	I1C	I1M2	I1M1	I1M0
			R	R/W			R	R/W		
			0	0	0	0	0	0	0	0
INTE3	INT3 enable	D1H	–				INT3			
			–	–	–	–	I3C	I3M2	I3M1	I3M0
							R	R/W		
			Note: Always write “0”.				0	0	0	0
INTETA01	INTTA0& INTTA1 enable	D4H	INTTA1 (TMRA1)				INTTA0 (TMRA0)			
			ITA1C	ITA1M2	ITA1M1	ITA1M0	ITA0C	ITA0M2	ITA0M1	ITA0M0
			R	R/W			R	R/W		
			0	0	0	0	0	0	0	0
INTETA23	INTTA2& INTTA3 enable	D5H	INTAT3 (TMRA3)				INTAT2 (TMRA2)			
			ITA3C	ITA3M2	ITA3M1	ITA3M0	ITA2C	ITA2M2	ITA2M1	ITA2M0
			R	R/W			R	R/W		
			0	0	0	0	0	0	0	0
INTETB0	INTTB00& INTTB01 enable	D8H	INTTB01 (TMRB0)				INTTB00 (TMRB0)			
			ITB01C	ITB01M2	ITB01M1	ITB01M0	ITB00C	ITB00M2	ITB00M1	ITB00M0
			R	R/W			R	R/W		
			0	0	0	0	0	0	0	0
INTETBO0	INTTBO0 (Overflow) enable	DAH	–				INTTBO0 (TMRB0)			
			–	–	–	–	ITBO0C	ITBO0M2	ITBO0M1	ITBO0M0
			R	R/W			R	R/W		
			0	0	0	0	0	0	0	0
INTES0	INTRX0& INTTX0 enable	DBH	INTTX0				INTRX0			
			ITX0C	ITX0M2	ITX0M1	ITX0M0	IRX0C	IRX0M2	IRX0M1	IRX0M0
			R	R/W			R	R/W		
			0	0	0	0	0	0	0	0
INTES1	INTRX1& INTTX1 enable	DCH	INTTX1				INTRX1			
			ITX1C	ITX1M2	ITX1M1	ITX1M0	IRX1C	IRX1M2	IRX1M1	IRX1M0
			R	R/W			R	R/W		
			0	0	0	0	0	0	0	0
INTE45	INT4& INT5 enable	E0H	INT5				INT4			
			I5C	I5M2	I5M1	I5M0	I4C	I4M2	I4M1	I4M0
			R	R/W			R	R/W		
			0	0	0	0	0	0	0	0
INTETB1	INTTB10& INTTB11 enable	E1H	INTTB11 (TMRB1)				INTTB10 (TMRB1)			
			ITB11C	ITB11M2	ITB11M1	ITB11M0	ITB10C	ITB10M2	ITB10M1	ITB10M0
			R	R/W			R	R/W		
			0	0	0	0	0	0	0	0
INTETBO1	INTTBO1 (Overflow) enable	E2H	–				INTTBO1 (TMRB1)			
			–	–	–	–	ITBO1C	ITBO1M2	ITBO1M1	ITBO1M0
			–	–	–	–	R	R/W		
			Note: Always write “0”.				0	0	0	0
INTESB0	INTSBE0 enable	E3H	–				INTSBE0			
			–	–	–	–	ISBE0C	ISBE0M2	ISBE0M1	ISBE0M0
			–	–	–	–	R	R/W		
			Note: Always write “0”.				0	0	0	0
INTEP0	INTP0 enable	EEH	–				INTP0			
			–	–	–	–	IP0C	IP0M2	IP0M1	IP0M0
							R	R/W		
			Note: Always write “0”.				0	0	0	0

Symbol	Name	Address	7	6	5	4	3	2	1	0
INTE0AD	INT0&INTAD enable	F0H	INTAD				INT0			
			IADC	IADM2	IADM1	IADM0	I0C	I0M2	I0M1	I0M0
			R	R/W			R	R/W		
			0	0	0	0	0	0	0	0
INTETC01	INTTC0& INTTC1 enable	F1H	INTTC1 (DMA1)				INTTC0 (DMA0)			
			ITC1C	ITC1M2	ITC1M1	ITC1M0	ITC0C	ITC0M2	ITC0M1	ITC0M0
			R	R/W			R	R/W		
			0	0	0	0	0	0	0	0
INTETC23	INTTC2& INTTC3 enable	F2H	INTTC3 (DMA3)				INTTC2 (DMA2)			
			ITC3C	ITC3M2	ITC3M1	ITC3M0	ITC2C	ITC2M2	ITC2M1	ITC2M0
			R	R/W			R	R/W		
			0	0	0	0	0	0	0	0
INTETC45	INTTC4& INTTC5 enable	F3H	INTTC5 (DMA5)				INTTC4 (DMA4)			
			ITC5C	ITC5M2	ITC5M1	ITC5M0	ITC4C	ITC4M2	ITC4M1	ITC4M0
			R	R/W			R	R/W		
			0	0	0	0	0	0	0	0
INTETC67	INTTC6& INTTC7 enable	F4H	INTTC7 (DMA7)				INTTC6 (DMA6)			
			ITC7C	ITC7M2	ITC7M1	ITC7M0	ITC6C	ITC6M2	ITC6M1	ITC6M0
			R	R/W			R	R/W		
			0	0	0	0	0	0	0	0
INTWDT	INTWD enable	F7H	–				INTWD			
			–	–	–	–	ITCWD	–	–	–
			–				R			
			Note: Always write “0”.				0	–	–	–

Interrupt request flag

IxxM2	IxxM1	IxxM0	Function (Write)
0	0	0	Disables interrupt request.
0	0	1	Sets interrupt priority level to 1.
0	1	0	Sets interrupt priority level to 2.
0	1	1	Sets interrupt priority level to 3.
1	0	0	Sets interrupt priority level to 4.
1	0	1	Sets interrupt priority level to 5.
1	1	0	Sets interrupt priority level to 6.
1	1	1	Disables interrupt request.

(2) External interrupt control

Symbol	Name	Address	7	6	5	4	3	2	1	0
IIMC	Interrupt input mode control	00F6H (Prohibit RMW)			I3EDGE	I2EDGE	I1EDGE	I0EDGE	I0LE	NMIREE
					W	W	W	W	R/W	R/W
					0	0	0	0	0	0
					INT3EDGE 0: Rising/ high 1: Falling/ low	INT2EDGE 0: Rising/ high 1: Falling/ low	INT1EDGE 0: Rising/ high 1: Falling/ low	INT0EDGE 0: Rising/ high 1: Falling/ low	INT0 0: Edge 1: Level	NMI 0: Falling edge 1: Falling and rising edges
IIMC2	Interrupt input mode control2	00FAH (Prohibit RMW)					I3LE	I2LE	I1LE	
							W	W	W	
							0	0	0	
							INT3 0: Edge 1: Level	INT2 0: Edge 1: Level	INT1 0: Edge 1: Level	

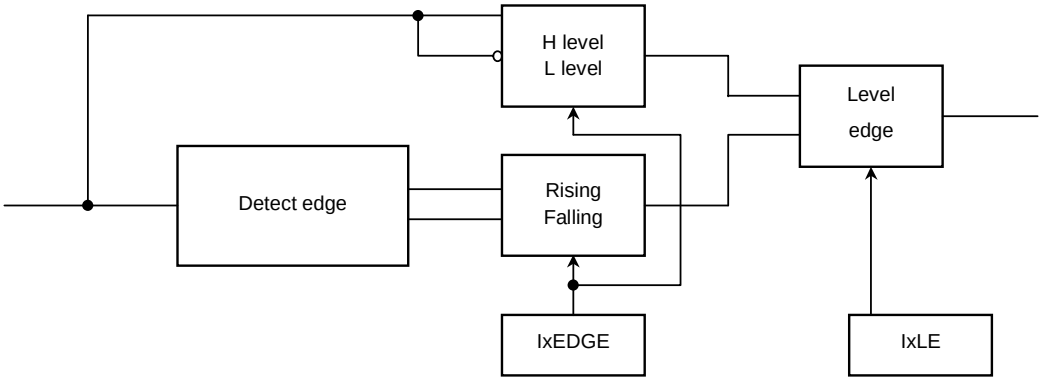

Note 1: Disable INT0 to INT3 before changing INT0 to 3 pins mode from “level” to “edge”.

Setting example for case of INT0:

```
DI
LD (IIMC)  ,XXXXXX0-B        ;  Change from “level” to “edge”.
LD (INTCLR),0AH              ;  Clear interrupt request flag.
NOP                          ;  Wait EI execution.
NOP
NOP
EI
```

X: Don’t care, –: No change

Note 2: See electrical characteristics in section 4 for external interrupt input pulse width.

Note 3: When release halt by INT0 to INT3 interrupt of level-mode in interrupt request enable, keep setting level by <IxEDGE> until be started interrupt process. If changed “level” before interrupt process starting, interrupt isn’t processed correctly.

Example) Case of set “H” level interrupt (<IxLE> = 1, <IxEDGE> = 0).
Keep “H” level until be started interrupt process. If changed to “L” level before interrupt process starting, interrupt isn’t processed correctly.

Table 3.4.2 Function Setting of External Interrupt Pin

Interrupt Pin	Shared Pin	Mode	Setting Method
INT0	PC3	Rising edge	IIMC<I0LE> = 0, INT0EDGE = 0
		Falling edge	IIMC<I0LE> = 0, INT0EDGE = 1
		High level	IIMC<I0LE> = 1, INT0EDGE = 0
		Low level	IIMC<I0LE> = 1, INT0EDGE = 1
INT1	PC1	Rising edge	IIMC2<I1LE> = 0, INT1EDGE = 0
		Falling edge	IIMC2<I1LE> = 0, INT1EDGE = 1
		High level	IIMC2<I1LE> = 1, INT1EDGE = 0
		Low level	IIMC2<I1LE> = 1, INT1EDGE = 1
INT2	PC5	Rising edge	IIMC2<I2LE> = 0, INT2EDGE = 0
		Falling edge	IIMC2<I2LE> = 0, INT2EDGE = 1
		High level	IIMC2<I2LE> = 1, INT2EDGE = 0
		Low level	IIMC2<I2LE> = 1, INT2EDGE = 1
INT3	PC6	Rising edge	IIMC2<I3LE> = 0, INT3EDGE = 0
		Falling edge	IIMC2<I3LE> = 0, INT3EDGE = 1
		High level	IIMC2<I3LE> = 1, INT3EDGE = 0
		Low level	IIMC2<I3LE> = 1, INT3EDGE = 1
INT4	PD0	Rising edge	TB1MOD<TB1CPM1:0> = 0, 0 or 0,1 or 1, 0
		Falling edge	TB1MOD<TB1CPM1:0> = 1, 0
INT5	PD1	Rising edge	–

(3) SIO receive interrupt control

Symbol	Name	Address	7	6	5	4	3	2	1	0
SIMC	SIO Interrupt control	F5H (Prohibit RMW)							IR1LE	IR0LE
									W	W
									1	1
									0: INTRX1 edge mode 1: INTRX1 level mode	0: INTRX0 edge mode 1: INTRX0 level mode

*INTRX1 level enables

0	Detect edge INTRX1
1	“H” level INTRX1

*INTRX0 rising edge enable

0	Detect edge INTRX0
1	“H” Level INTRX0

(4) Interrupt request flag clear register

The interrupt request flag is cleared by writing the appropriate micro DMA start vector, as given in Table 3.4.1, to the register INTCLR.

For example, to clear the interrupt flag INT0, perform the following register operation after execution of the DI instruction.

INTCLR ← 0AH Clears interrupt request flag INT0

Symbol	Name	Address	7	6	5	4	3	2	1	0
INTCLR	Interrupt clear control	F8H (Prohibit RMW)			CLRV5	CLRV4	CLRV3	CLRV2	CLRV1	CLRV0
					W					
					0	0	0	0	0	0
					Interrupt clear					

(5) Micro DMA start vector registers

This register assigns micro DMA processing to which interrupt source. The interrupt source with a micro DMA start vector that matches the vector set in this register is assigned as the micro DMA start source.

When the micro DMA transfer counter value reaches “0”, the micro DMA transfer end interrupt corresponding to the channel is sent to the interrupt controller, the micro DMA start vector register is cleared, and the micro DMA start source for the channel is cleared. Therefore, to continue micro DMA processing, set the micro DMA start vector register again during the processing of the micro DMA transfer end interrupt.

If the same vector is set in the micro DMA start vector registers of more than one channel, the channel with the lowest number has a higher priority. Accordingly, if the same vector is set in the micro DMA start vector registers of two channels, the interrupt generated in the channel with the lower number is executed until micro DMA transfer is completed. If the micro DMA start vector for this channel is not set again, the next micro DMA is started for the channel with the higher number (Micro DMA chaining).

Symbol	Name	Address	7	6	5	4	3	2	1	0
DMA0V	DMA0 start vector	100H			DMA0V5	DMA0V4	DMA0V3	DMA0V2	DMA0V1	DMA0V0
					R/W					
					0	0	0	0	0	0
					DMA0 start vector					
DMA1V	DMA1 start vector	101H			DMA1V5	DMA1V4	DMA1V3	DMA1V2	DMA1V1	DMA1V0
					R/W					
					0	0	0	0	0	0
					DMA1 start vector					
DMA2V	DMA2 start vector	102H			DMA2V5	DMA2V4	DMA2V3	DMA2V2	DMA2V1	DMA2V0
					R/W					
					0	0	0	0	0	0
					DMA2 start vector					
DMA3V	DMA3 start vector	103H			DMA3V5	DMA3V4	DMA3V3	DMA3V2	DMA3V1	DMA3V0
					R/W					
					0	0	0	0	0	0
					DMA3 start vector					
DMA4V	DMA4 start vector	104H			DMA4V5	DMA4V4	DMA4V3	DMA4V2	DMA4V1	DMA4V0
					R/W					
					0	0	0	0	0	0
					DMA4 start vector					
DMA5V	DMA5 start vector	105H			DMA5V5	DMA5V4	DMA5V3	DMA5V2	DMA5V1	DMA5V0
					R/W					
					0	0	0	0	0	0
					DMA5 start vector					
DMA6V	DMA6 start vector	106H			DMA6V5	DMA6V4	DMA6V3	DMA6V2	DMA6V1	DMA6V0
					R/W					
					0	0	0	0	0	0
					DMA6 start vector					
DMA7V	DMA7 start vector	107H			DMA7V5	DMA7V4	DMA7V3	DMA7V2	DMA7V1	DMA7V0
					R/W					
					0	0	0	0	0	0
					DMA7 start vector					

(6) Specification of a micro DMA burst

Specifying the micro DMA burst function causes micro DMA transfer, once started, to continue until the value in the transfer counter register reaches 0. Setting any of the bits in the register DMAB which correspond to a micro DMA channel (as shown below) to 1 specifies that any micro DMA transfer on that channel will be a burst transfer.

Symbol	Name	Address	7	6	5	4	3	2	1	0
DMAB	DMA burst	108H	DBST7	DBST6	DBST5	DBST4	DBST3	DBST2	DBST1	DBST0
			R/W							
			0	0	0	0	0	0	0	0
			1: DMA request on burst mode							

(7) Notes

The instruction execution unit and the bus interface unit in this CPU operate independently. Therefore if, immediately before an interrupt is generated, the CPU fetches an instruction which clears the corresponding interrupt request flag (Note), the CPU may execute this instruction in between accepting the interrupt and reading the interrupt vector. In this case, the CPU will read the default vector 0004H and jump to interrupt vector address FFFF04H.

To avoid this, an instruction which clears an interrupt request flag should always be placed after a DI instruction. And in the case of setting an interrupt enable again by EI instruction after the execution of clearing instruction, execute EI instruction after clearing and more than 3-instructions (e.g., "NOP"× 1 times).

If placed EI instruction without waiting NOP instruction after execution of clearing instruction, interrupt will be enable before request flag is cleared. Thus, when be changed interrupt request level to "0", change it after cleared corresponding interrupt request by INTCLR instruction.

In the case of changing the value of the interrupt mask register <IFF2:0> by execution, disable an interrupt by DI instruction before execution of POPSR instruction.

In addition, please note that the following two circuits are exceptional and demand special attention.

INT0 to INT3 level mode	In level mode INT0 to INT3 are not an edge-triggered interrupt. Hence, in level mode the interrupt request flip-flop for INT0 to INT3 does not function. The peripheral interrupt request passes through the S input of the flip-flop and becomes the Q output. If the interrupt input mode is changed from edge mode to level mode, the interrupt request flag is cleared automatically.

	If the CPU enters the interrupt response sequence as a result of INT x (x = 0, 1, 2, or 3) going from 0 to 1, INTx must then be held at 1 until the interrupt response sequence has been completed. If INTx is set to Level mode so as to release a Halt state, INTx must be held at 1 from the time INTx changes from 0 to 1 until the Halt state is released. (Hence, it is necessary to ensure that input noise is not interpreted as a 0, causing INTx to revert to 0 before the Halt state has been released.)
	When the mode changes from level mode to edge mode, interrupt request flags which were set in level mode will not be cleared. Interrupt request flags must be cleared using the following sequence.
	DI
	LD (IIMC), 00H ; Changes from level to edge.
	LD (INTCLR), 0AH ; Clears interrupt request flag.
	NOP ; Wait EI execution.
	NOP
	NOP
	EI

INTRX	The interrupt request flip-flop can only be cleared by a reset or by reading the serial channel receive buffer. It cannot be cleared by an instruction.

Note: The following instructions or pin input state changes are equivalent to instructions that clear the interrupt request flag.

INT0 to INT 3: Instructions which switch to level mode after an interrupt request has been generated in edge mode.

The pin input change from high to low after interrupt request has been generated in level mode. ("H" → "L", "L" →"H")

INTRX: Instruction which read the receive buffer.

3.5 Port Function

The TMP92CM22 features 58-bit settings which relate to the various I/O ports.

As well as general-purpose I/O port functionality, the port pins also have I/O functions which relate to the built-in CPU and internal I/Os. Table 3.5.1 lists the functions of each port pin.

Table 3.5.2 and Table 3.5.3 lists I/O registers and their specifications.

Table 3.5.1 Port Function (R: U = with pull-up resistor)

Port Names	Pin Names	Number of Pins	Direction	R	Direction Setting Unit	Pin Names for Built-In Function
Port 1	P10 to P17	8	I/O	–	Bit	D8 to D15
Port 4	P40 to P47	8	I/O*	–	Bit*	A0 to A7
Port 5	P50 to P57	8	I/O*	–	Bit*	A8 to A15
Port 6	P60 to P67	8	I/O*	–	Bit*	A16 to A23
Port 7	P70	1	Output	–	(Fixed)	$\overline{RD}$
	P71	1	Output	–	(Fixed)	$\overline{WRLL}$
	P72	1	Output	–	(Fixed)	$\overline{WRLU}$
	P73	1	Output	–	(Fixed)	
	P74	1	Output	–	(Fixed)	CLKOUT
	P75	1	Output	–	(Fixed)	R/ $\overline{W}$
	P76	1	I/O	–	Bit	$\overline{WAIT}$
Port 8	P80	1	Output	–	(Fixed)	$\overline{CS0}$
	P81	1	Output	–	(Fixed)	$\overline{CS1}$
	P82	1	Output	–	(Fixed)	$\overline{CS2}$
	P83	1	Output	–	(Fixed)	$\overline{CS3}$
Port 9	P90	1	I/O	–	Bit	SCK
	P91	1	I/O	–	Bit	SO, SDA
	P92	1	I/O	–	Bit	SI, SCL
Port A	PA0	1	Input	U	(Fixed)	
	PA1	1	Input	U	(Fixed)	
	PA2	1	Input	U	(Fixed)	
	PA7	1	Input	U	(Fixed)	
Port C	PC0	1	I/O	–	Bit	TA0IN
	PC1	1	I/O	–	Bit	INT1, TA1OUT
	PC3	1	I/O	–	Bit	INT0
	PC5	1	I/O	–	Bit	INT2, TA3OUT
	PC6	1	I/O	–	Bit	INT3, TB0OUT0
Port D	PD0	1	I/O	–	Bit	INT4, TB1IN0
	PD1	1	I/O	–	Bit	INT5, TB1IN1
	PD2	1	I/O	–	Bit	TB1OUT0
	PD3	1	I/O	–	Bit	TB1OUT1
Port F	PF0	1	I/O	–	Bit	TXD0
	PF1	1	I/O	–	Bit	RXD0
	PF2	1	I/O	–	Bit	SCLK0, $\overline{CTS0}$
	PF3	1	I/O	–	Bit	TXD1
	PF4	1	I/O	–	Bit	RXD1
	PF5	1	I/O	–	Bit	SCLK1, $\overline{CTS1}$
	PF6	1	I/O	–	Bit	
	PF7	1	I/O	–	Bit	
Port G	PG0	1	Input	–	(Fixed)	AN0
	PG1	1	Input	–	(Fixed)	AN1
	PG2	1	Input	–	(Fixed)	AN2
	PG3	1	Input	–	(Fixed)	AN3, $\overline{ADTRG}$
	PG4	1	Input	–	(Fixed)	AN4
	PG5	1	Input	–	(Fixed)	AN5
	PG6	1	Input	–	(Fixed)	AN6
	PG7	1	Input	–	(Fixed)	AN7

*: When these ports are used as general-purpose I/O port, each bit can be set individually for input or output. However, each bit cannot be set individually for input or output even if 1bit or more bits are used as address bus in same port.
All of general-purpose I/O ports except for port that used as address bus are operated as output port.
Please be careful when using this setting.

Table 3.5.2 I/O Port Setting List (1/2)

Ports	Input Pins	Specification	I/O Register Setting Value			
			Pn	PnCR	PnFC	PnODE
Port 1	P10 to P17	Input port	×	0	0	None
		Output port	×	1		
		D8 to D15 bus	×	×	1	
Port 4	P40 to P47	Input port*	×	0*	0	None
		Output port*	×	1*		
		A0 to A7 output	×	×	1	
Port 5	P50 to P57	Input port*	×	0*	0	None
		Output port*	×	1*		
		A8 to A15 output	×	×	1	
Port 6	P60 to P67	Input port*	×	0*	0	None
		Output port*	×	1*		
		A16 to A23 output	×	×	1	
Port 7	P70 to P75	Output port	×	None	0	None
	P70	$\overline{RD}$ output	×	None	1	
	P71	$\overline{WRLL}$ output				
	P72	$\overline{WRLU}$ output				
	P74	CLKOUT output				
	P75	R/ $\overline{W}$ output				
	P76	Input port	×	0	0	
		Output port	×	1	0	
		$\overline{WAIT}$ Input	×	0	1	
Port 8	P80 to P83	Output port	×	None	0	None
	P80	$\overline{CS0}$ output	×		1	
	P81	$\overline{CS1}$ output	×		1	
	P82	$\overline{CS2}$ output	×		1	
	P83	$\overline{CS3}$ output	×		1	
Port 9	P90 to P92	Input port	×	0	0	0
		Output port	×	1	0	0
	P90	SCK input	×	×	1	None
		SCK output	×	×	1	
	P91	SDA input	×	×	1	0
		SO, SDA output	×	×	1	0
		SO, SDA (Open drain)	×	×	1	1
	P92	SI, SCL input	×	×	1	0
		SI, SCL output	×	×	1	0
		SI, SCL (Open drain)	×	×	1	1

X: Don't care

*: When these ports are used as general-purpose I/O port, each bit can be set individually for input or output. However, each bit cannot be set individually for input or output even if 1bit or more bits are used as address bus in same port.
All of general-purpose I/O ports except for port that used as address bus are operated as output port.
Please be careful when using this setting.

Table 3.5.3 I/O Port Setting List (2/2)

Ports	Input Pins	Specification	I/O Register Setting Value			
			Pn	PnCR	PnFC	PnODE
Port A	PA0, PA1, PA2, PA7	Input port	×	None	None	None
Port C	PC0, PC1, PC3, PC5, PC6	Input port	×	0	0	None
		Output port	×	1	0	
	PC0	TA0IN input	×	×	1	
	PC1	TA1OUT output	×	1	1	
		INT1 input	×	0	1	
	PC3	INT0 input	×	×	1	
	PC5	INT2 input	×	0	1	
		TA3OUT	×	1	1	
	PC6	INT3 input	×	0	1	
		TB0OUT0	×	1	1	
Port D	PD0 to PD3	Input port	×	0	0	None
		Output port	×	1	0	
	PD0	TB1IN0, INT4 input	×	0	1	
	PD1	TB1IN1, INT5 input	×	0	1	
	PD2	TB0OUT0 output	×	1	1	
	PD3	TB0OUT1 output	×	1	1	
Port F	PF0 to PF7	Input port	×	0	0	None
		Output port	×	1	0	
	PF0	TXD0 (Open drain)	×	0	1	
		TXD0	×	1	1	
	PF1	RXD0 input	×	0	None	
	PF2	SCLK0 input/output	×	0/1	1	
		$\overline{CTS0}$ input	×	0	1	
	PF3	TXD1 (Open drain)	×	0	1	
		TXD1	×	1	1	
	PF4	RXD1 input	×	0	None	
	PF5	SCLK1 input/output	×	0/1	1	
		$\overline{CTS1}$ input	×	0	1	
Port G	PG0 to PG7	Input port	×	None	None	None
		AN0 to AN7 input	×			
	PG3	$\overline{ADTRG}$ input	×			

X: Don't care

By resetting, these port pins become general-purpose input port.
I/O pin is reset to input pin. When use built-in function, process all function by software.

3.5.1 Port 1 (P10 to P17)

Port1 is an 8-bit general-purpose I/O port. Bits can be individually set as either inputs or outputs by control register P1CR and function register P1FC.

In addition to functioning as a general-purpose I/O port, port1 can also function as a data bus (D8 to D15).

After released reset, device set port1 to pins of follow function by combination of AM1 and AM0 pins.

AM1	AM0	Function Setting after Reset
0	0	Don't use this setting
0	1	Data bus (D8 to D15)
1	0	Input port (P10 to P17)
1	1	Don't use this setting

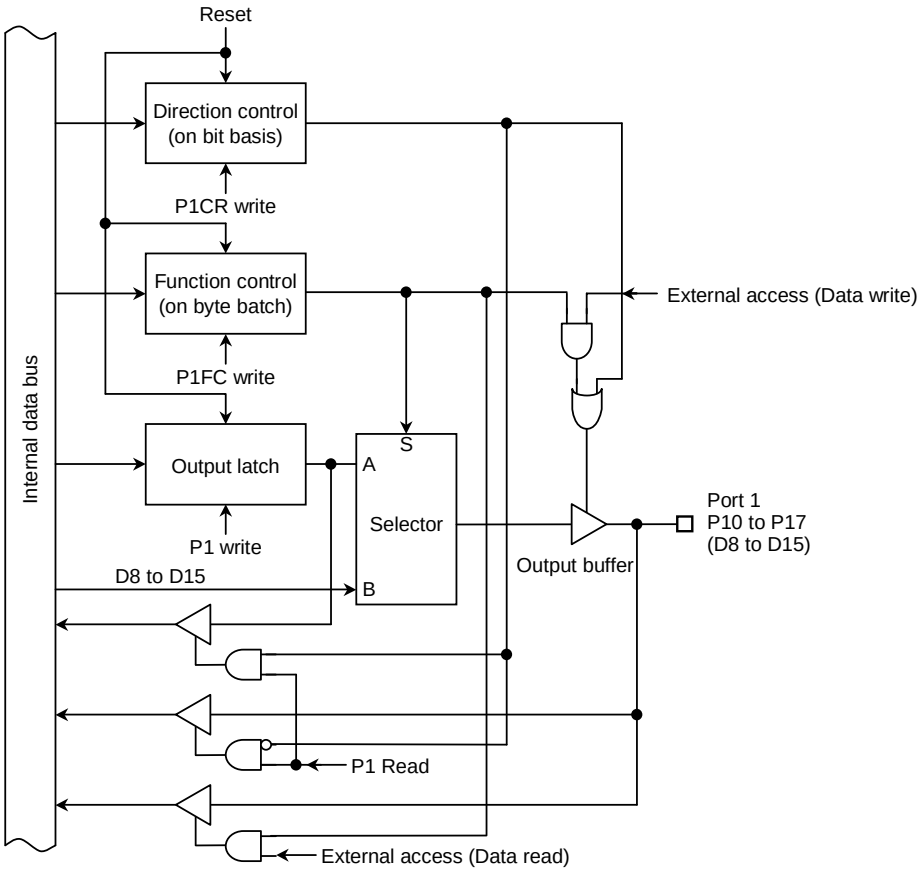

Figure 3.5.1 Port 1

Port 1 Register

P1 (0004H)	7	6	5	4	3	2	1	0
Bit symbol	P17	P16	P15	P14	P13	P12	P11	P10
Read/Write	R/W							
After reset	Data from external port (Output latch register is clear to “0”.)							

Port 1 Control Register

P1CR (0006H)	7	6	5	4	3	2	1	0
Bit symbol	P17C	P16C	P15C	P14C	P13C	P12C	P11C	P10C
Read/Write	W							
After reset	0	0	0	0	0	0	0	0
Function	Refer to port 1 function setting							

Port 1 Function Register

P1FC (0007H)	7	6	5	4	3	2	1	0
Bit symbol								P1F
Read/Write								W
After reset								0/1*
Function	Refer to port 1 function setting							

Port 1 Function setting

P1CR<P1xC> \ P1FC<P1F>	0	1
0	Input port	Data bus (D15 to D8)
1	Output port	Don’t use this setting

*: When AM1 = 0, AM0 = 1, 1,
when AM1 = 1, AM0 = 0, 0

Note 1: Read-modify-write instruction is prohibited for registers P1FC and P1CR.

Note 2: <P1XC> shows “X bit” of P1CR register.

Figure 3.5.2 Register for Port 1

3.5.2 Port 4 (P40 to P47)

Port 4 is an 8-bit general-purpose I/O port*. Bits can be individually set as either inputs or outputs by control register P4CR and function register P4FC*.

In addition to functioning as a general-purpose I/O port, port 4 can also function as a address bus (A0 to A7).

After released reset, device set Port 4 to pins of follow function by combination of AM1 and AM0 pins.

AM1	AM0	Function Setting after Reset
0	0	Don't use this setting
0	1	Address bus (A0 to A7)
1	0	Address bus (A0 to A7)
1	1	Don't use this setting

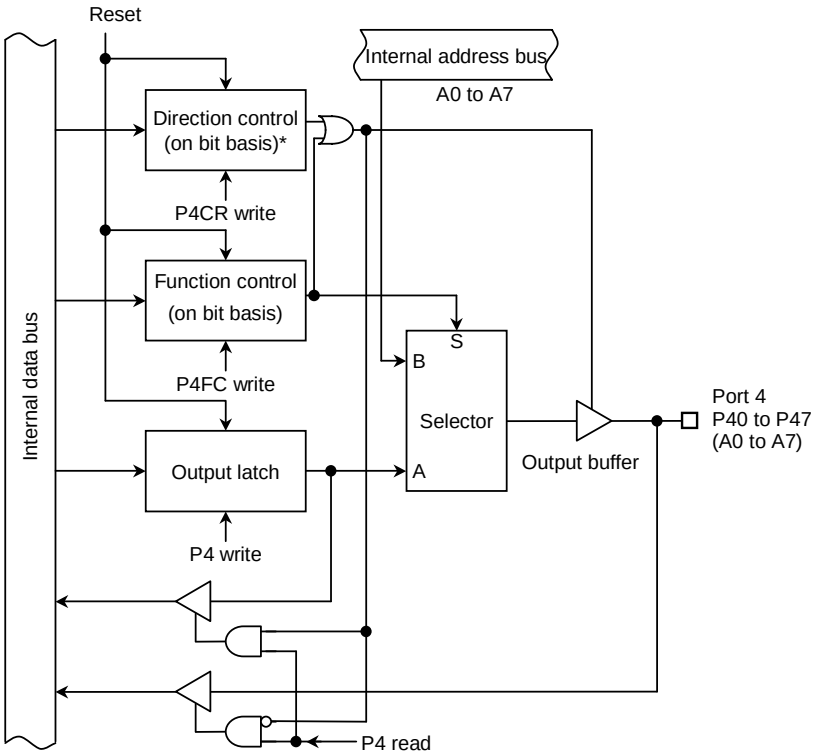

*: When these ports are used as general-purpose I/O port, each bit can be set individually for input or output. However, each bit cannot be set individually for input or output even if 1bit or more bits are used as address bus in same port.
All of general-purpose I/O ports except for port that used as address bus are operated as output port.
Please be careful when using this setting.

Figure 3.5.3 Port 4

Port 4 Register

		7	6	5	4	3	2	1	0
P4 (0010H)	Bit symbol	P47	P46	P45	P44	P43	P42	P41	P40
	Read/Write	R/W							
	After reset	Data from external port (Output latch register is cleared to “0”.)							

Port 4 Control Register

		7	6	5	4	3	2	1	0
P4CR (0012H)	Bit symbol	P47C	P46C	P45C	P44C	P43C	P42C	P41C	P40C
	Read/Write	W							
	After reset	0	0	0	0	0	0	0	0
	Function	0: Input 1: Output (Note2)							

Port 4 Function Register

		7	6	5	4	3	2	1	0
P4FC (0013H)	Bit symbol	P47F	P46F	P45F	P44F	P43F	P42F	P41F	P40F
	Read/Write	W							
	After reset	1	1	1	1	1	1	1	1
	Function	0: Port 1: Address bus (A0 to A7)							

Note1: Read-modify-write instruction is prohibited for registers P4CR and P4FC.

Note2: When these ports are used as general-purpose I/O port, each bit can be set individually for input or output. However, each bit cannot be set individually for input or output even if 1bit or more bits are used as address bus in same port.
All of general-purpose I/O ports except for port that used as address bus are operated as output port.
Please be careful when using this setting.

Figure 3.5.4 Register for Port 4

3.5.3 Port 5 (P50 to P57)

Port 5 is an 8-bit general-purpose I/O port*. Bits can be individually set as either inputs or outputs by control register P5CR and function register P5FC*.

In addition to functioning as a general-purpose I/O port, port 5 can also function as a address bus (A8 to A15).

After released reset, device set port 5 to pins of follow function by combination of AM1 and AM0 pins.

AM1	AM0	Function Setting after Reset
0	0	Don't use this setting
0	1	Address bus (A8 to A15)
1	0	Address bus (A8 to A15)
1	1	Don't use this setting

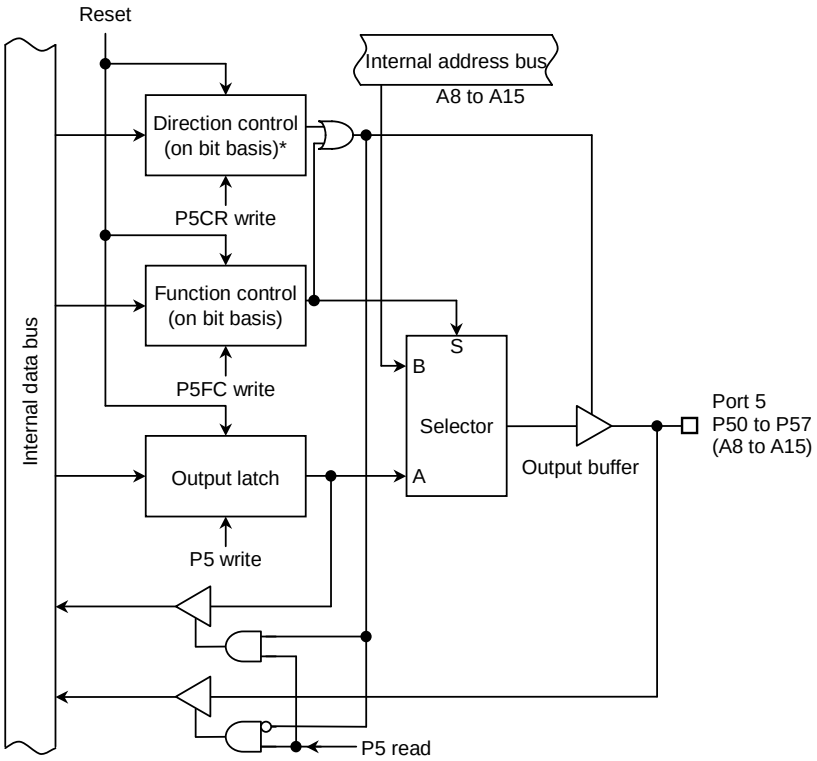

*: When these ports are used as general-purpose I/O port, each bit can be set individually for input or output. However, each bit cannot be set individually for input or output even if 1bit or more bits are used as address bus in same port.
All of general-purpose I/O ports except for port that used as address bus are operated as output port.
Please be careful when using this setting.

Figure 3.5.5 Port 5

Port 5 Register

P5 (0014H)	7	6	5	4	3	2	1	0
Bit symbol	P57	P56	P55	P54	P53	P52	P51	P50
Read/Write	R/W							
After reset	Data from external port (Output latch register is cleared to “0”.)							

Port 5 Control Register

P5CR (0016H)	7	6	5	4	3	2	1	0
Bit symbol	P57C	P56C	P55C	P54C	P53C	P52C	P51C	P50C
Read/Write	W							
After reset	0	0	0	0	0	0	0	0
Function	0: Input 1: Output (Note2)							

Port 5 Function Register

P5FC (0017H)	7	6	5	4	3	2	1	0
Bit symbol	P57F	P56F	P55F	P54F	P53F	P52F	P51F	P50F
Read/Write	W							
After reset	1	1	1	1	1	1	1	1
Function	0: Port 1: Address bus (A8 to A15)							

Note1: Read-modify-write instruction is prohibited for registers P5CR and P5FC.

Note2: When these ports are used as general-purpose I/O port, each bit can be set individually for input or output. However, each bit cannot be set individually for input or output even if 1bit or more bits are used as address bus in same port.
All of general-purpose I/O ports except for port that used as address bus are operated as output port.
Please be careful when using this setting.

Figure 3.5.6 Register for Port 5

3.5.4 Port 6 (P60 to P67)

Port 6 is an 8-bit general-purpose I/O port*. Bits can be individually set as either inputs or outputs by control register P6CR and function register P6FC*.

In addition to functioning as a general-purpose I/O port, port 6 can also function as a address bus (A16 to A23).

After released reset, device set port 6 to pins of follow function by combination of AM1 and AM0 pins.

AM1	AM0	Function Setting after Reset
0	0	Don't use this setting
0	1	Address bus (A16 to A23)
1	0	Address bus (A16 to A23)
1	1	Don't use this setting

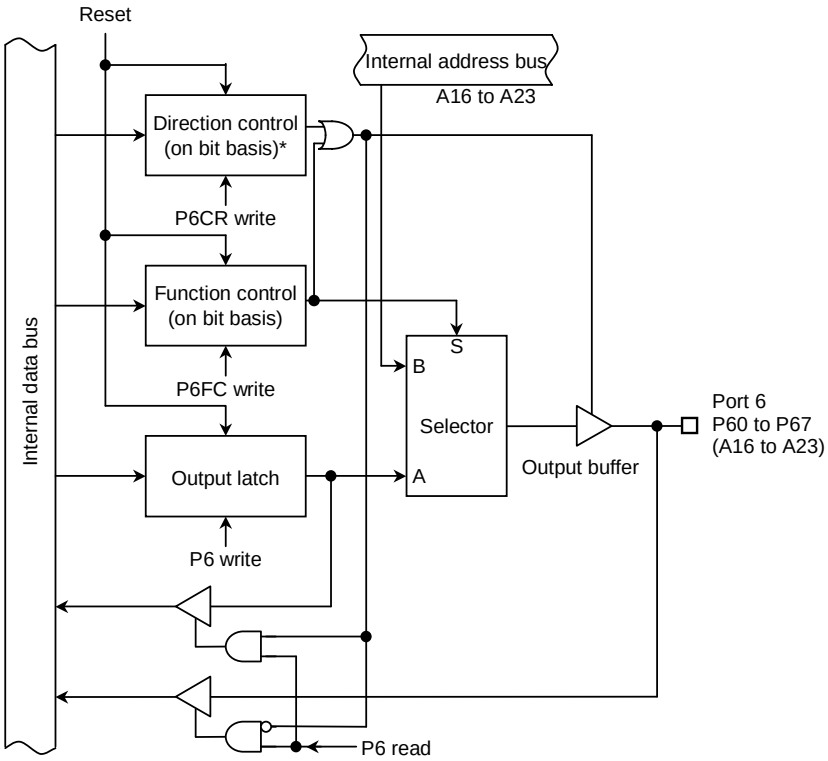

*: When these ports are used as general-purpose I/O port, each bit can be set individually for input or output. However, each bit cannot be set individually for input or output even if 1bit or more bits are used as address bus in same port.
All of general-purpose I/O ports except for port that used as address bus are operated as output port.
Please be careful when using this setting.

Figure 3.5.7 Port 6

Port 6 Register

P6 (0018H)	7	6	5	4	3	2	1	0
Bit symbol	P67	P66	P65	P64	P63	P62	P61	P60
Read/Write	R/W							
After reset	Data from external port (Output latch register is cleared to “0”.)							

Port 6 Control Register

P6CR (001AH)	7	6	5	4	3	2	1	0
Bit symbol	P67C	P66C	P65C	P64C	P63C	P62C	P61C	P60C
Read/Write	W							
After reset	0	0	0	0	0	0	0	0
Function	0: Input 1: Output (Note2)							

Port 6 Function Register

P6FC (001BH)	7	6	5	4	3	2	1	0
Bit symbol	P67F	P66F	P65F	P64F	P63F	P62F	P61F	P60F
Read/Write	W							
After reset	1	1	1	1	1	1	1	1
Function	0: Port 1: Address bus (A16 to A23)							

Note1: Read-modify-write instruction is prohibited for registers P6CR and P6FC.

Note2: When these ports are used as general-purpose I/O port, each bit can be set individually for input or output. However, each bit cannot be set individually for input or output even if 1bit or more bits are used as address bus in same port.
All of general-purpose I/O ports except for port that used as address bus are operated as output port.
Please be careful when using this setting.

Figure 3.5.8 Register for Port 6

3.5.5 Port 7 (P70 to P76)

Port 7 is a 7-bit general-purpose I/O port (P70 to P75 are used for output only).

Bits can be individually set as either inputs or outputs by control register P7CR and function register P7FC.

In addition to functioning as a general-purpose I/O port, P70 to P73 pins can also function as output pin of read/write strobe signals to connect with an external memory. P74 pin can also function as CLKOUT output pin when outputted internal clock. P76 pin can also function as wait input.

After reset, P71 to P75 pins are set to output port mode, and P76 pin is set to input port mode.

P70 pin set port 1 to pins of follow function by combination of AM1 and AM0 pins.

AM1	AM0	Function Setting after Reset
0	0	Don't use this setting
0	1	CPU control pin ($\overline{RD}$)
1	0	CPU control pin ($\overline{RD}$)
1	1	Don't use this setting

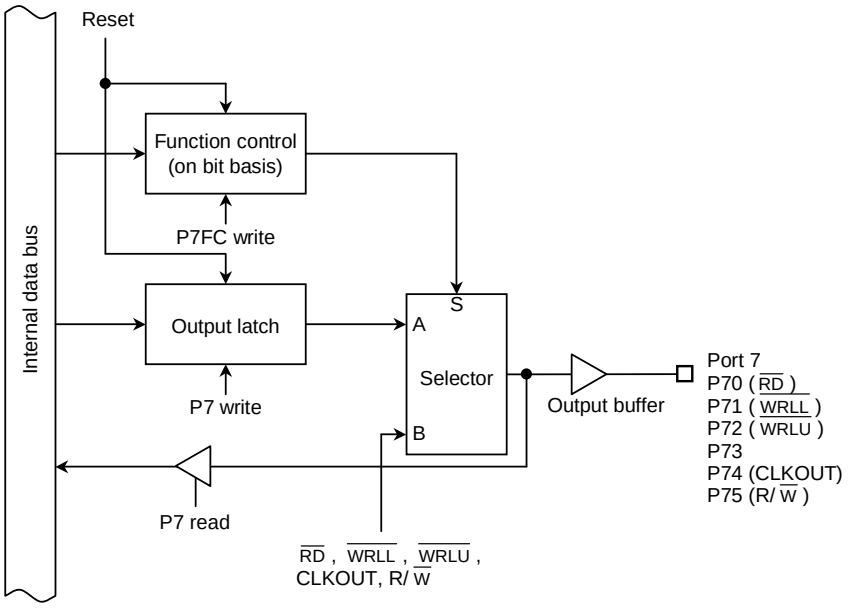

Note: P73 is fixed to VCC.

Figure 3.5.9 Port 7 (P70 to P75)

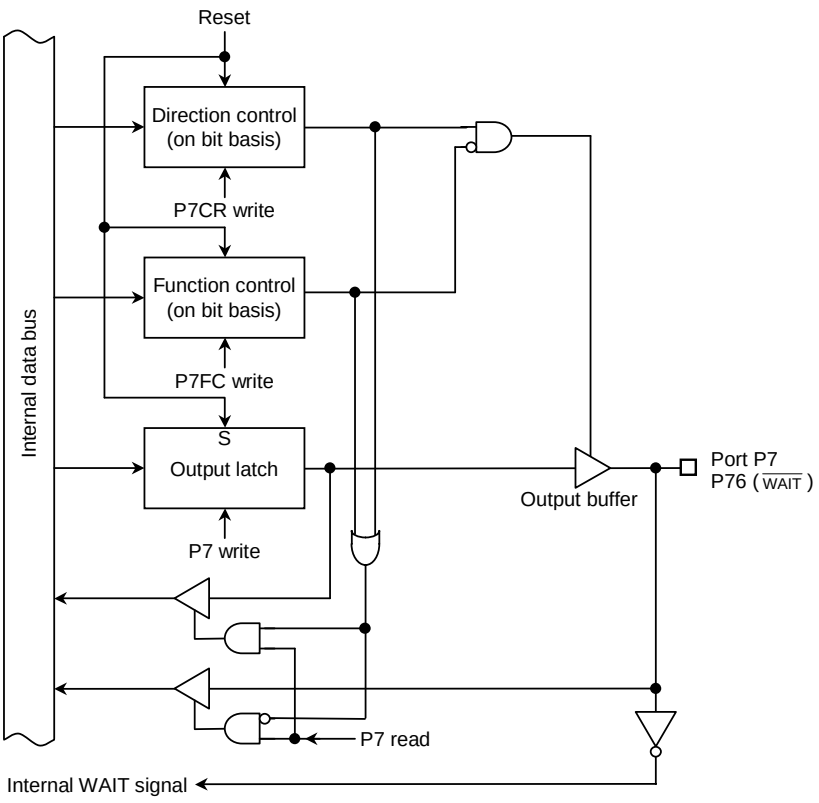

Figure 3.5.10 Port 7 (P76)

Port 7 Register

		7	6	5	4	3	2	1	0
P7 (001CH)	Bit symbol		P76	P75	P74	P73	P72	P71	P70
	Read/Write		R/W						
	After reset		Data from external port (Note)	1	1	1	1	1	1

Note: Output latch register is cleared to 0.

Port 7 Control Register

		7	6	5	4	3	2	1	0
P7CR (001EH)	Bit symbol		P76C						
	Read/Write		W						
	After reset		0						
	Function		0: Input 1: Output						

Port 7 Function Register

		7	6	5	4	3	2	1	0
P7FC (001FH)	Bit symbol		P76F	P75F	P74F	P73F	P72F	P71F	P70F
	Read/Write		W						
	After reset		0	0	0	0	0	0	1
	Function		0: Port 1: $\overline{WAIT}$	0: Port 1: R/$\overline{W}$	0: Port 1: CLKOUT	0: Port 1: Don't set	0: Port 1: $\overline{WRLU}$	0: Port 1: $\overline{WRLL}$	0: Port 1: $\overline{RD}$

Note: Read-modify-write instruction is prohibited for registers P7CR and P7FC.

Figure 3.5.11 Register for Port 7

3.5.6 Port 8 (P80 to P83)

Port 8 is 4-bit output port. Resetting sets output latch of P82 to "0" and set output latches of P80, P81, and P83 to "1".

In addition to functioning as a output port, port 8 can also function as a output chip select signal ($\overline{CS0}$ to $\overline{CS3}$).

These settings operate by programming "1" to the corresponding bit of P8FC.

Resetting set all bits of P8FC to "0", these pits set output mode.

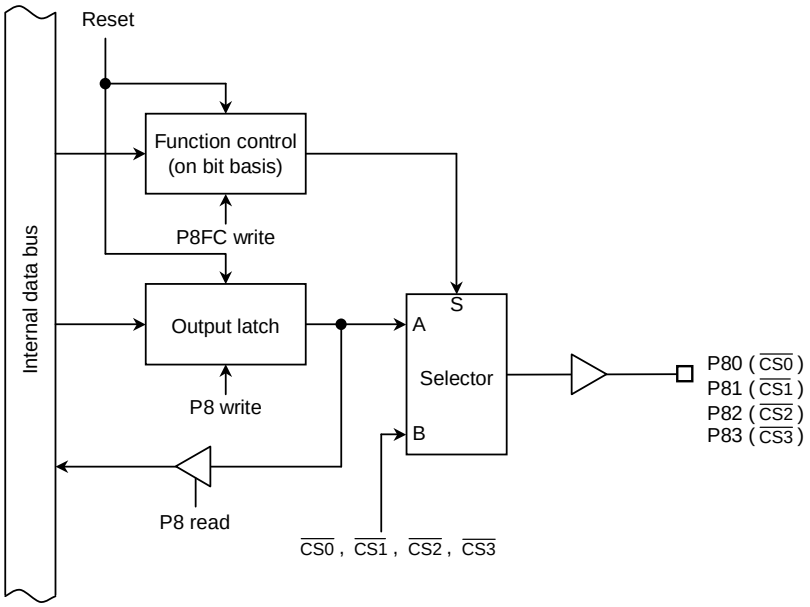

Figure 3.5.12 Port 8

Port 8 Register

		7	6	5	4	3	2	1	0
P8 (0020H)	Bit symbol					P83	P82	P81	P80
	Read/Write					R/W			
	After reset					1	0	1	1

Port 8 Function Register

		7	6	5	4	3	2	1	0
P8FC (0023H)	Bit symbol					P83F	P82F	P81F	P80F
	Read/Write					W			
	After reset					0	0	0	0
	Function					0: Port 1: $\overline{CS3}$	0: Port 1: $\overline{CS2}$	0: Port 1: $\overline{CS1}$	0: Port 1: $\overline{CS0}$

Note 1: Read-modify-write instruction is prohibited for the registers P8FC.

Note 2: When set P82 pin as $\overline{CS2}$ after release reset, set function register (P8FC<P82F> = 1) in keep output latch of P82 to "0" (P8<P82> = 0).

If set function register (P8FC<P82F> = 1) after set output latch to "1" (P8<P82> = 1), maybe operation become to error because $\overline{CS2}$ output don't output correctly.

Figure 3.5.13 Register for Port 8

3.5.7 Port 9 (P90 to P92)

Port 9 is 3-bit general-purpose I/O port. Each bit can be set individually for input or output.

In addition to functioning as a general-purpose I/O port, port 9 can also function as a serial bus interface input (SCK (Clock signal in SIO mode), SO (Data output signal in SIO mode), SDA (Data signal in I²C bus mode), SI (Data input signal in SIO mode) and SCL (Clock signal in I²C bus mode)).

These settings operate by programming "1" to the corresponding bit of P9FC.

Resetting set value of P9CR and P9FC to "0", all bits are set to input port. And all bits of output latch are set to "1".

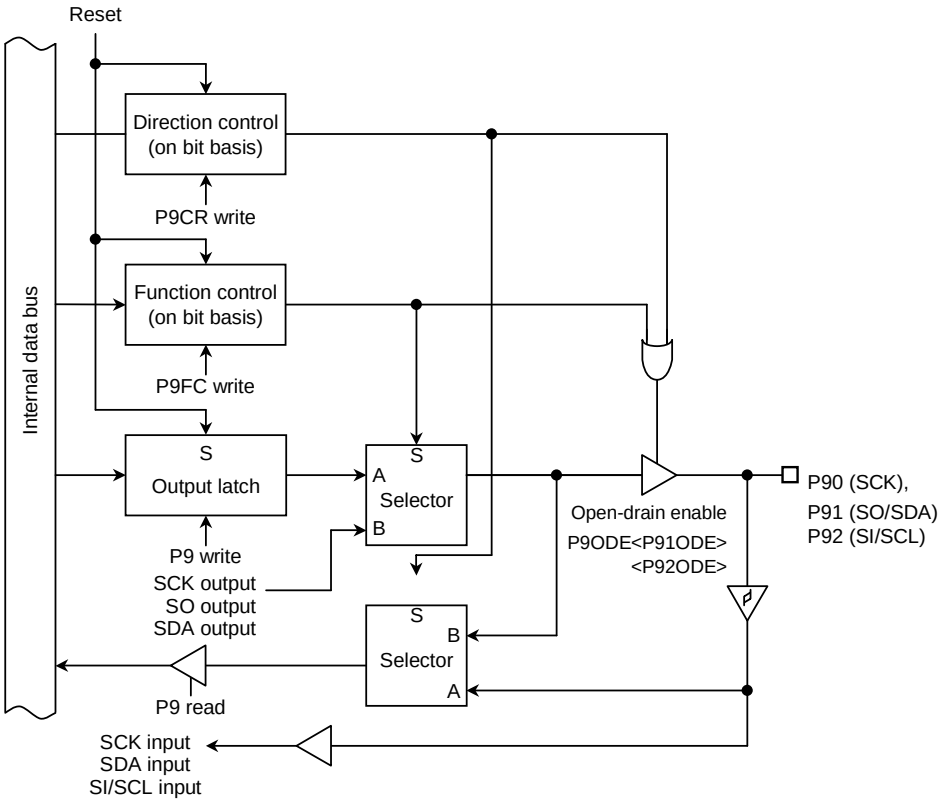

Figure 3.5.14 Port 9 (P90 to P92)

Port 9 Register

P9 (0024H)	7	6	5	4	3	2	1	0
Bit symbol						P92	P91	P90
Read/Write						R/W		
After reset						Data from external port (Output latch register is set to 1)		

Port 9 Control Register

P9CR (0026H)	7	6	5	4	3	2	1	0
Bit symbol						P92C	P91C	P90C
Read/Write						W		
After reset						0	0	0
Function						0: Input 1: Output		

Port 9 Function Register

P9FC (0027H)	7	6	5	4	3	2	1	0
Bit symbol						P92F	P91F	P90F
Read/Write						W		
After reset						0	0	0
Function						0: Port 1: SI, SCL	0: Port 1: SO, SDA	0: Port 1: SCK

Port 9 ODE Register

P9ODE (0025H)	7	6	5	4	3	2	1	0
Bit symbol						P92ODE	P91ODE	
Read/Write						W		
After reset						0	0	
Function						1:Open drain	1:Open drain	

Note: Read-modify-write instruction is prohibited for the registers P9CR, P9FC, and P9ODE.

Figure 3.5.15 Register for Port 9

3.5.8 Port A (PA0 to PA2, PA7)

Port A is 4-bit general-purpose input port with pull-up resistor.

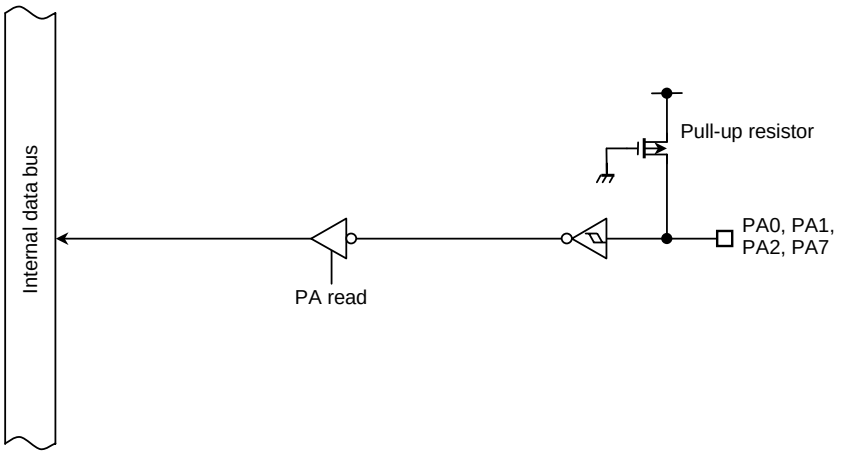

Figure 3.5.16 Port A

Port A Register

		7	6	5	4	3	2	1	0
PA (0028H)	Bit symbol	PA7					PA2	PA1	PA0
	Read/Write	R					R		
	After reset	Data from external port					Data from external port		

Figure 3.5.17 Register for Port A

3.5.9 Port C (PC0, PC1, PC3, PC5, and PC6)

Port C is 5-bit general-purpose I/O port. Each bit can be set individually for input or output. Resetting sets port C to input port.

In addition to functioning as a general-purpose I/O port, port C can also function as a input/output pin (TA0IN, TA1OUT, TA3OUT, and TB0OUT0) and external interrupt pin (INT0 to INT3).

These settings operate by programming "1" to the corresponding bit of PCCR and PCFC.

Resetting resets the PCCR and PCFC to "0", and sets all bits to input port.

(1) PC0 (TA0IN)

In addition to function as I/O port, port PC0 can also function as input pin TA0IN of timer channel 0.

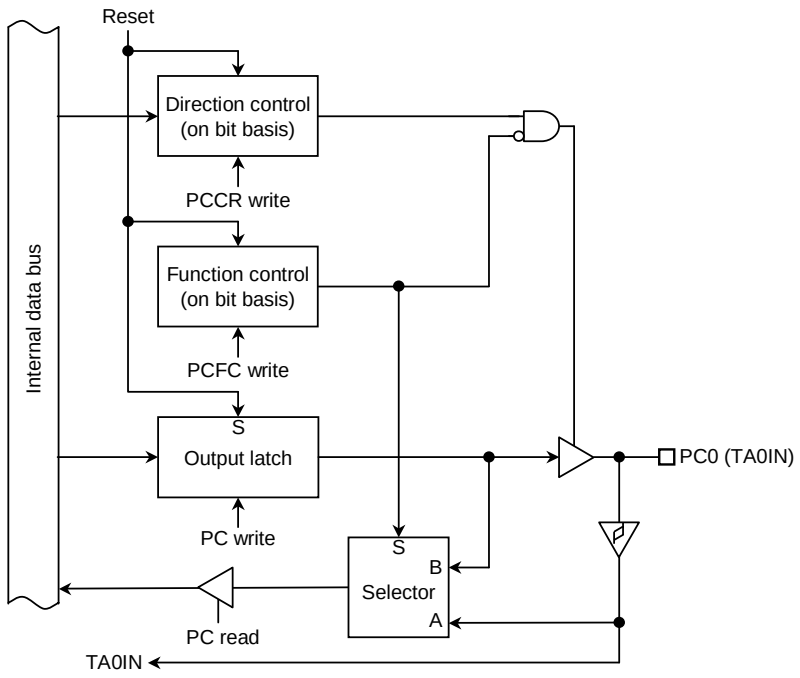

Note: Can not read the output latch data when output mode.

Figure 3.5.18 Port C (PC0)

(2) PC1 (INT1, TA1OUT), PC5 (INT2, TA3OUT), PC6 (INT3, TB0OUT0)

In addition to function as I/O port, port PC1, PC5, and PC6 can also function as external interrupt input pin INT1 to INT3 and output pin of timer channel TA1OUT, TA3OUT, and TB0OUT0.

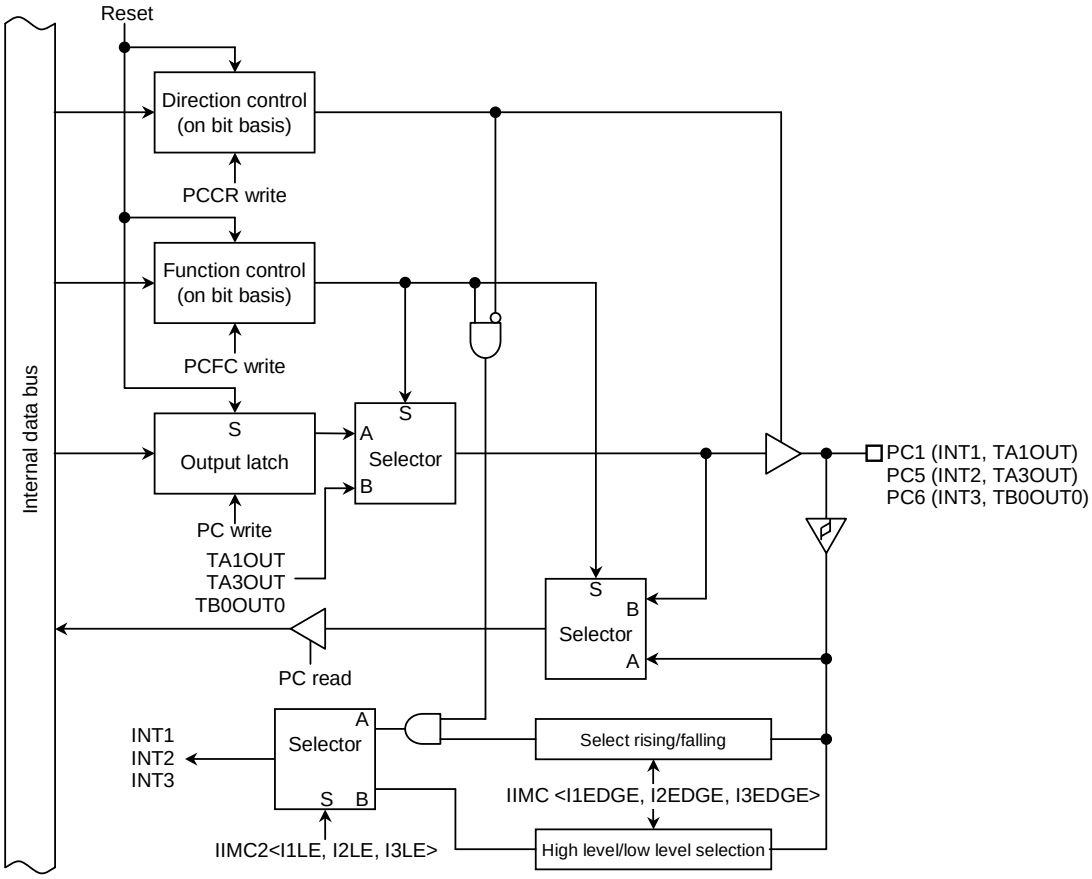

Note: Can not read the output latch data when output mode.

Figure 3.5.19 Port C (PC1, PC5, and PC6)

(3) PC3 (INT0)

In addition to function as I/O port, port PC3 can also function as external interrupt pin INT0.

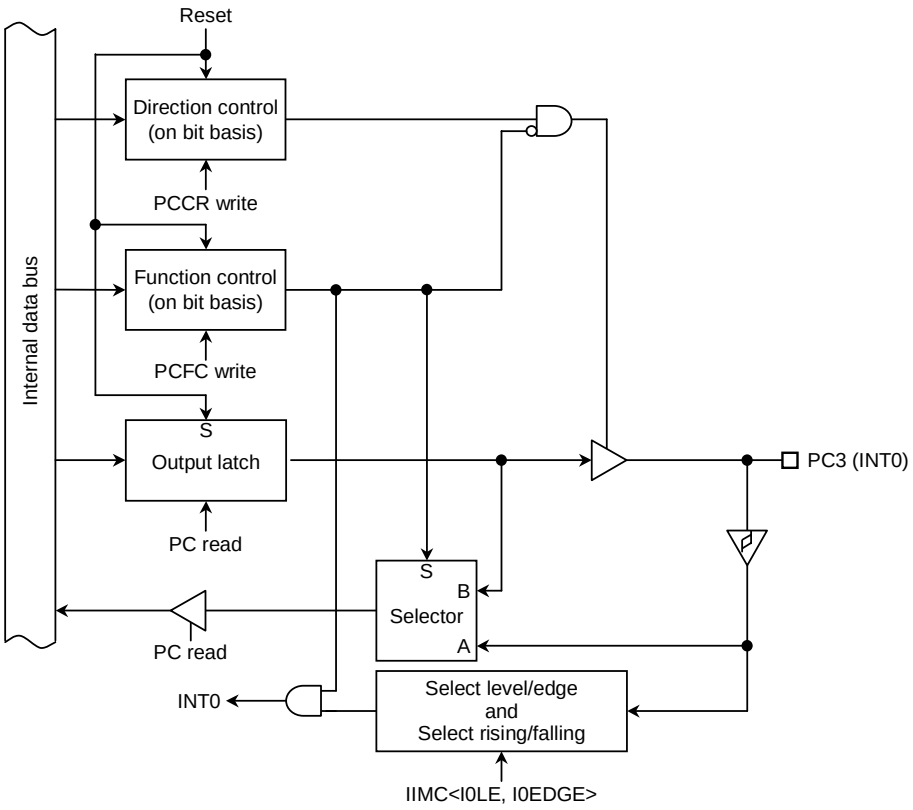

Figure 3.5.20 Port C (PC3)

Port C Register

PC (0030H)	7	6	5	4	3	2	1	0
Bit symbol		PC6	PC5		PC3		PC1	PC0
Read/Write		R/W			R/W		R/W	
After reset		Data from external port (Note)			Data from external port (Note)		Data from external port (Note)	

Note: Output latch register is set to 1.

Port C Control Register

PCCR (0032H)	7	6	5	4	3	2	1	0
Bit symbol		PC6C	PC5C		PC3C		PC1C	PC0C
Read/Write		W			W		W	
After reset		0	0		0		0	0
Function		0: Input 1: Output			0: Input 1: Output		0: Input 1: Output	

Port C Function Register

PCFC (0033H)	7	6	5	4	3	2	1	0
Bit symbol		PC6F	PC5F		PC3F		PC1F	PC0F
Read/Write		W			W		W	
After reset		0	0		1		0	0
Function		0: Port 1: INT3 TB0OUT0	0: Port 1: INT2 TA3OUT		0: Port 1: INT0		0: Port 1: INT1 TA1OUT	0: Port 1: TA0IN

INT1, TA1OUT setting

<PC1C> / <PC1F>	0	1
0	Input port	Output port
1	INT1	TA1OUT

INT2, TA3OUT Setting

<PC5C> / <PC5F>	0	1
0	Input port	Output port
1	INT2	TA3OUT

INT3, TB0OUT0 setting

<PC6C> / <PC6F>	0	1
0	Input port	Output port
1	INT3	TB0OUT0

Note 1: Read-modify-write instruction is prohibited for the registers PCCR and PCFC.

Note 2: PC0/TA0IN pins do not have a register changing PORT/FUNCTION. For example, when it is used as an input port, the input signal is inputted to 8-bit timer as the input 0.

Note 3: Can not read the output latch data when PC0, PC1, PC5, and PC6 are output mode.

Figure 3.5.21 Register for Port C

3.5.10 Port D (PD0 to PD3)

Port D is 4-bit general-purpose I/O port. Each bit can be set individually for input or output. Resetting sets port D to input port.

In addition to functioning as a general-purpose I/O port, port D can also function as a input pin (INT4 and INT5)/output pin (TB0IN, TB1OUT, TB3OUT, and TB1OUT1).

These settings operate by programming "1" to the corresponding bit of PDCR and PDFC.

Resetting resets the PDCR and PDFC to "0", and sets all bits to input port.

(1) PD0 (INT4, TB1IN0), PD1 (INT5, TB1IN1)

In addition to function as I/O port, port PD0 and PD1 can also function as external interrupt input pins INT4, INT5, timer channel input pins TB1IN0 and TB1IN1.

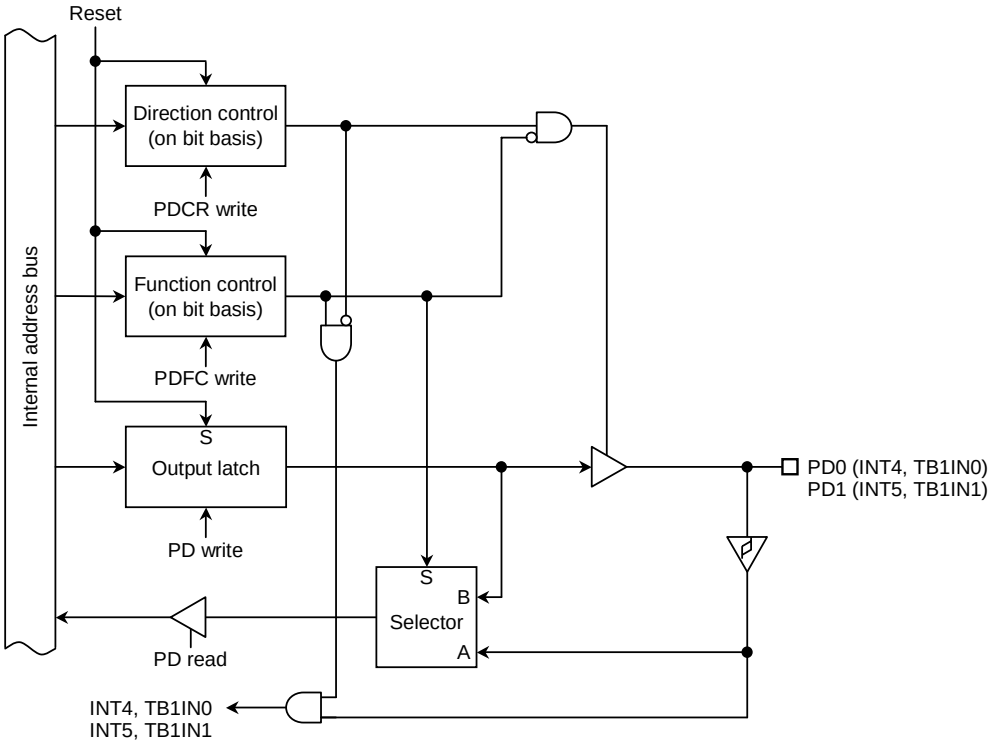

Note: Can not read the output latch data when output mode.

Figure 3.5.22 Port D (PD0 and PD1)

(2) PD2 (TB1OUT0) and PD3 (TB1OUT1)

In addition to function as I/O port, port PD0 and PD1 can also function as timer channel output pins TB1OUT0 and TB1OUT1.

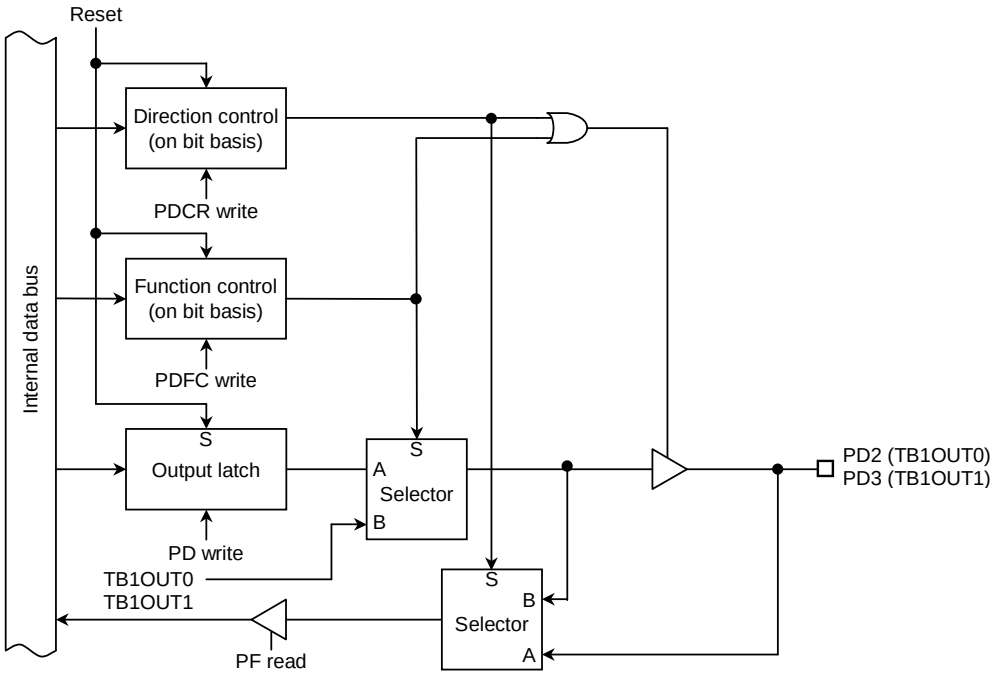

Figure 3.5.23 Port D (PD2 and PD3)

Port D Register

PD (0034H)	7	6	5	4	3	2	1	0
Bit symbol					PD3	PD2	PD1	PD0
Read/Write					R/W			
After reset					Data from external port (Output latch register is set to 1)			

Port D Control Register

PDCR (0036H)	7	6	5	4	3	2	1	0
Bit symbol					PD3C	PD2C	PD1C	PD0C
Read/Write					W	W	W	W
After reset					0	0	0	0
Function					0: Input 1: Output	0: Input 1: Output	0: Input 1: Output	0: Input 1: Output

Port D I/O setting

0	Input
1	Output

Port D Function Register

PDFC (0037H)	7	6	5	4	3	2	1	0
Bit symbol					PD3F	PD2F	PD1F	PD0F
Read/Write					W	W	W	W
After reset					0	0	0	0
Function					0: Port 1: TB1OUT1	0: Port 1: TB1OUT0	0: Port 1: TB0IN1 INT5 input	0: Port 1: TB0IN0 INT4 input

PD2 output setting asTB1OUT0

PDFC<PD2F>	1
PDCR<PD2C>	1

PD3 output setting as TB1OUT1

PDFC<PD3F>	1
PDCR<PD3C>	1

Note 1: Read-modify-write instruction is prohibited for the registers PDFC and PDCR.
Note 2: Can not read the output latch data when PD0 and PD1 are output mode.

Figure 3.5.24 Register for Port D

3.5.11 Port F (PF0 to PF7)

Port F is 8-bit general-purpose I/O port. Each bit can be set individually for input or output. Resetting resets the PFCR and PFFC to “0”, and sets all bits to input port. And all bits of output latch register to “1”.

In addition to functioning as a general-purpose I/O port, port F can also function as I/O function of serial channel 0 and 1.

These settings operate by writing “1” to the corresponding bit of PFFC.

Resetting resets the PDCR and PDFC to “0”, and sets all bits to input port.

(1) Port PF0 and PF3 (TXD0/TXD1)

In addition to function as I/O port, port PF0 and PF3 can also function as TXD output pin of serial channel.

Thus, output buffer feature a programmable open-drain function, and setting enable by PFFC<PF0F, PF3F> and PFCR<PF0C, PF3C> register.

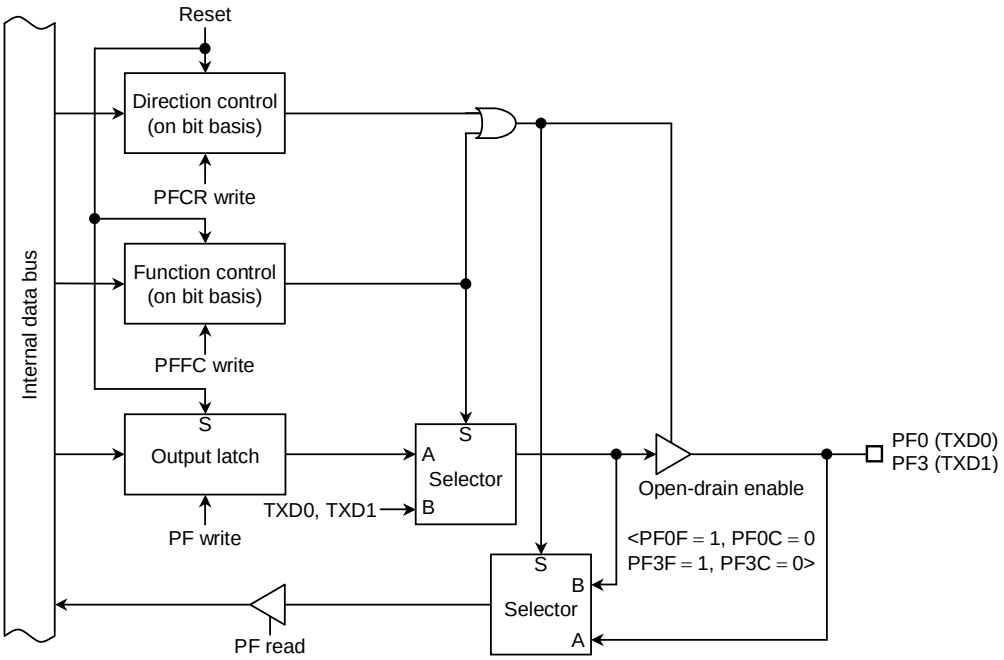

Figure 3.5.25 Port F (PF0 and PF3)

(2) Ports PF1 and PF4 (RXD0 and XD1)

In addition to function as I/O port, port PF1 and PF4 can also function as RXD input pin of serial channel.

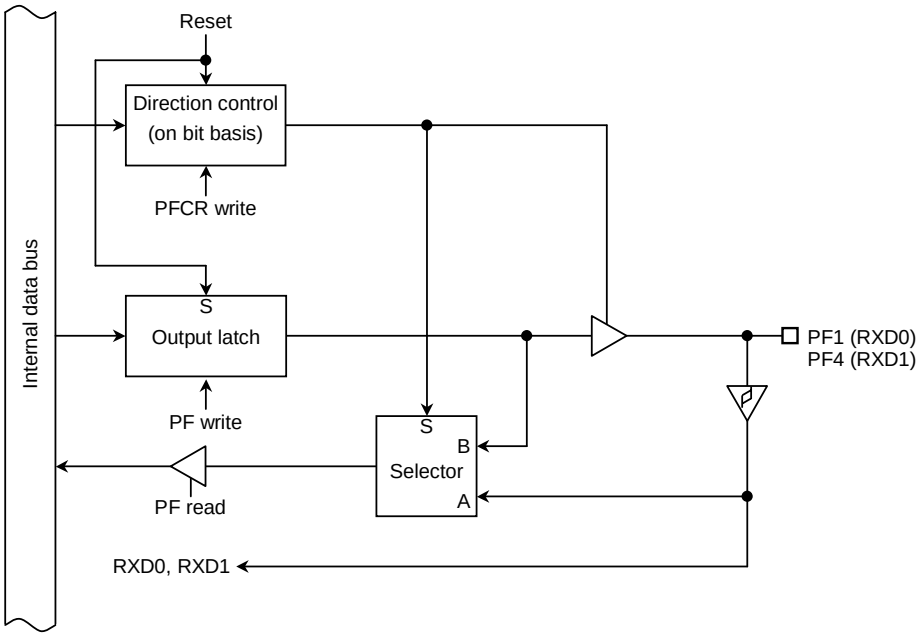

Figure 3.5.26 Port F (PF and PF4)

(3) Port PF2 ($\overline{CTS0}$, SCLK0) and port PF5 ($\overline{CTS1}$, SCLK1)

In addition to function as I/O port, port PF2 and PF5 can also function as $\overline{CTS}$ input pin of serial channel or SCLK I/O pin.

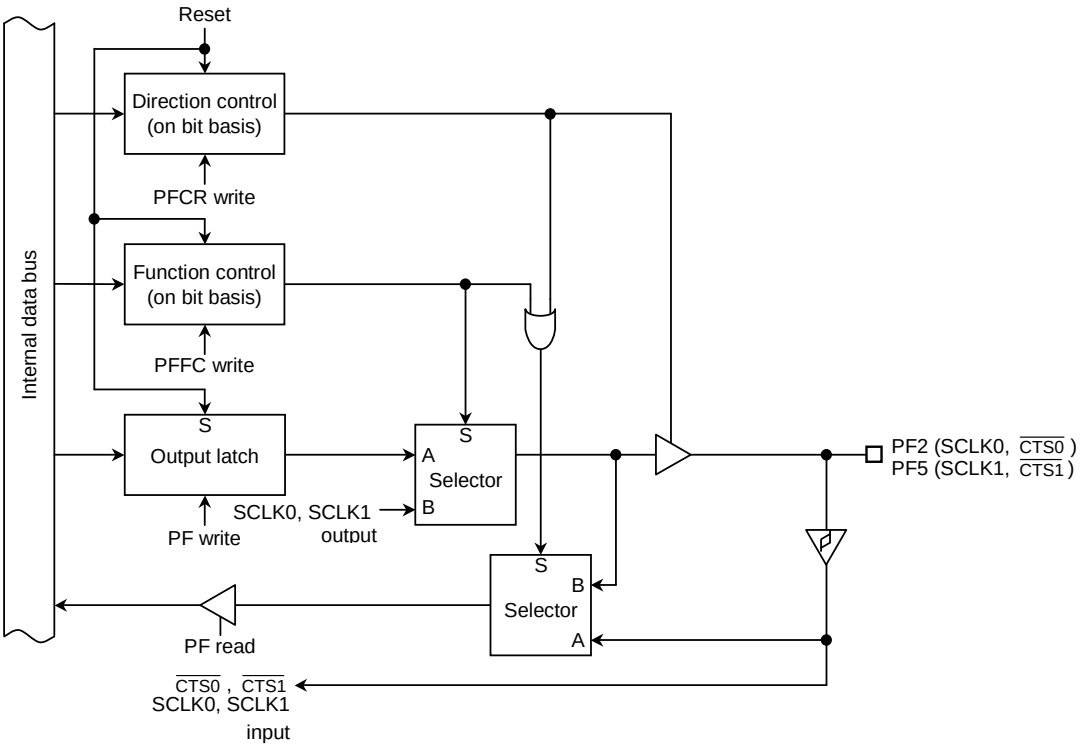

Figure 3.5.27 Port F (PF2 and PF5)

(4) Port PF6 and port PF7

These port are general-purpose I/O port.

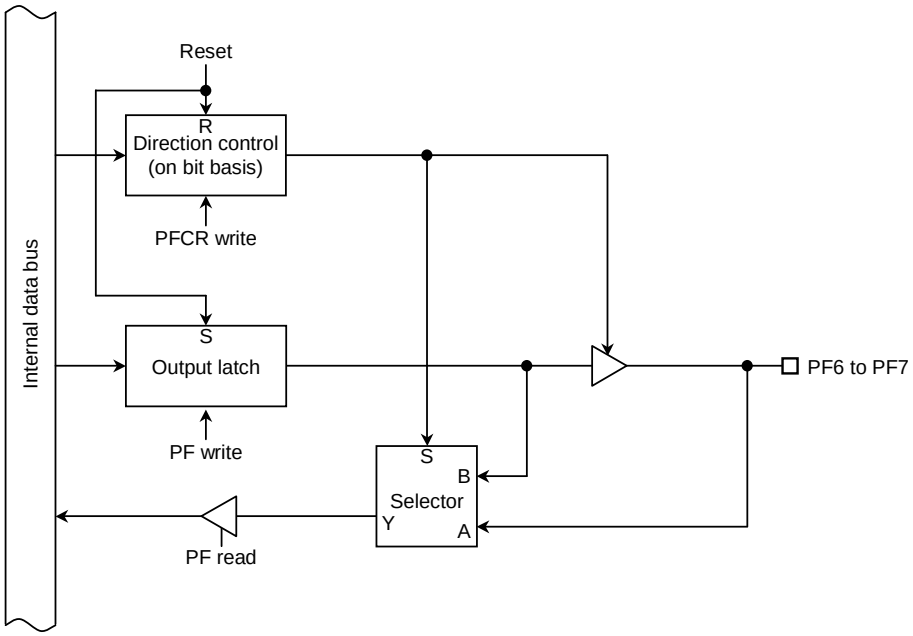

Figure 3.5.28 Port F (PF6 and PF7)

Port F Register

PF (003CH)

	7	6	5	4	3	2	1	0
Bit symbol	PF7	PF6	PF5	PF4	PF	PF2	PF1	PF0
Read/Write	R/W							
After reset	Data from external port (Output latch register is set to 1)							

Port F Control Register

PFCR (003EH)

	7	6	5	4	3	2	1	0
Bit symbol	PF7C	PF6C	PF5C	PF4C	PF3C	PF2C	PF1C	PF0C
Read/Write	W							
After reset	0	0	0	0	0	0	0	0
Function	0: Input 1: Output							

Port F Function Register

PFFC (003FH)

	7	6	5	4	3	2	1	0
Bit symbol	–	–	PF5F		PF3F	PF2F		PF0F
Read/Write	W	W	W		W	W		W
After reset	0	0	0		0	0		0
Function	Always write “0”.	Always write “0”.	0: Port 1: SCLK1 output		0: Port 1: TXD1	0: Port 1: SCLK0 output		0: Port 1: TXD0

Port function setting

<PF3C> / <PF3F>	0	1
0	Input port	Output port
1	TXD1 (Open drain)	TXD1

<PF0C> / <PF0F>	0	1
0	Input port	Output port
1	TXD0 (Open drain)	TXD0

Note 1: Read-modify-write instruction is prohibited for the registers PFCR and PFFC.

Note 2: PF1/RXD0 and PF4/RXD1 pins do not have a register changing PORT/FUNCTION. For example, when it is used as an input port, the input signal is inputted to SIO as the serial receive data.

Note 3: PF0 and PF3 pins do not have a register (PFODE) for open-drain setting. Please conduct the open-drain setting according to above setting.

Figure 3.5.29 Register for Port F

3.5.12 Port G (PG0 to PG7)

Port G is 8-bit input port and can also be used as the analog input pins for the internal AD converter. PG3 can also be used as ADTRG pin for the AD converter.

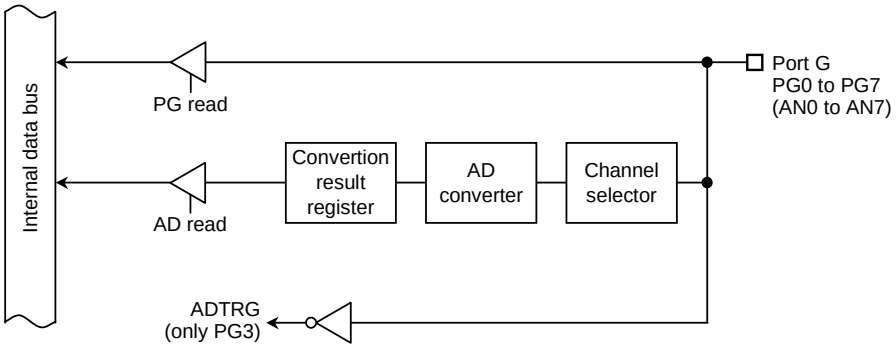

Figure 3.5.30 Port G

Port G Register

		7	6	5	4	3	2	1	0
PG (0040H)	Bit symbol	PG7	PG6	PG5	PG4	PG3	PG2	PG1	PG0
	Read/Write	R							
	After reset	Data from external port							

Note: The input channel selection of AD converter and the permission of ADTRG input are set by AD converter mode register ADMOD1.

Figure 3.5.31 Register for Port G

3.6 Memory Controller

3.6.1 Function

TMP92CM22 has a memory controller with a variable 4-block address area that controls as follows.

(1) 4-block address area support
Specifies a start address and a block size for 4-block address area.

(2) Connecting memory specifications
Specifies SRAM and ROM as memories to connect with the selected address areas.

(3) Data bus size selection
Whether 8-bit or 16-bit is selected as the data bus size of the respective block address areas.

(4) Wait control
Wait specification bit in the control register and WAIT input pin control the number of waits in the external bus cycle. Read cycle and write cycle can specify the number of waits individually.
The number of waits is controlled in 5 mode mentioned below.

0 waits, 1 wait,
2 waits, 3 waits,
N waits (Control with $\overline{\text{WAIT}}$ pin)

3.6.2 Control Register and Operation after Reset Release

This section describes the registers to control the memory controller, the state after reset release and necessary settings.

(1) Control register

The control registers of the memory controller are as follows.

- Control register: BnCSH/BnCSL (n = 0 to 3, EX)
  Sets the basic functions of the memory controller, that is the connecting memory type, the number of waits to be read and written.
- Memory start address register: MSARn (n = 0 to 3)
  Sets a start address in the selected block address areas.
- Memory address mask register: MAMRn (n = 0 to 3)
  Sets a block size in the selected address areas.

In addition to setting of the above-mentioned registers, it is necessary to set the following registers to control ROM page mode access.

- Page ROM control register: PMEMCR
  Sets to executed ROM page mode accessing.

(2) Operation after reset release

The start data bus width is determined depending on state of AM1 and AM0 pins just after reset release. Then, the external memory is accessed as follows.

AM1	AM0	Start Mode
0	0	Don't use this setting
0	1	Start with 16-bit data bus
1	0	Start with 8-bit data bus
1	1	Don't use this setting

AM1/AM0 pins are valid only just after reset release. In the other cases, the data bus width is set to the value set to BnBUS bit of the control register.

By reset, only control register (B2CSH/B2CSL) of the block address area 2 is automatically effective (B2CSH<B2E> is set to "1" by reset).

The data bus width which is specified by AM1/AM0 pin is loaded to the bit to specify the bus width of the control register in the block address area 2.

The block address area 2 is set to address 000000H to FFFFFFH by reset.

After reset release, the block address areas are specified by the memory start address register (MSAR) and the memory address mask register (MAMR). Then the control register (BnCS) is set.

Set the enable bit (BnE) of the control register to "1" to enable the setting.

3.6.3 Basic Functions and Register Setting

In this section, setting of the block address area, the connecting memory and the number of waits out of the memory controller's functions are described.

(1) Block address area specification

The block address area is specified by two registers.

The memory start address register (MSAR) sets the start address of the block address areas. The memory controller compares between the register value and the address every bus cycles. The address bit which is masked by the memory address mask register (MAMR) is not compared by the memory controller. The block address area size is determined by setting the memory address mask register. The set value in the register is compared with the block address area on the bus. If the compared result is a match, the memory controller sets the chip select signal ($\overline{CS}$) to "low".

(i) Setting memory start address register

The MS23 to MS16 bits of the memory start address register respectively correspond with addresses A23 to A16. The lower start address A15 to A0 are always set to address 0000H.

Therefore the start address of the block address area are set to addresses 000000H to FF0000H every 64 Kbytes.

(ii) Setting memory address mask registers

The memory address mask register sets whether an address bit is compared or not. Set the register to "0" to compare, or to "1" not to compare.

The address bit to be set is depended on the block address area.

Block address area 0: A20 to A8

Block address area 1: A21 to A8

Block address area 2 to 3: A22 to A15

The above-mentioned bits are always compared. The block address area size is determined by the compared result.

The size to be set depending on the block address area is as follows.

Size (bytes) / CS area	256	512	32 K	64 K	128 K	256 K	512 K	1 M	2 M	4 M	8 M
CS0	○	○	○	○	○	○	○	○	○		
CS1	○	○		○	○	○	○	○	○	○	
CS2 to CS3			○	○	○	○	○	○	○	○	○

Note: After reset release, only the control register of the block address area 2 is valid. The control register of the block address area 2 has <B2M> bit. Setting <B2M> bit to "0" sets the block address area 2 to addresses 000000H to FFFFFFH. State of after reset release is set this. Setting <B2M> bit to "1" specifies the start address and the address area size as it is in the other block address area.

(iii) Example of register setting

To set the block address area 1 to 512 bytes from address 110000H, set the register as follows.

MSAR1 Register

	7	6	5	4	3	2	1	0
Bit symbol	M1S23	M1S22	M1S21	M1S20	M1S19	M1S18	M1S17	M1S16
Setting value	0	0	0	1	0	0	0	1

M1S23 to M1S16 bits of the memory start address register MSAR1 correspond with address A23 to A16.

A15 to A0 are cleared to "0". Therefore setting MSAR1 to the above-mentioned value specifies the start address of the block address area to address 110000H.

The start address is set as it is in the other block address areas.

MAMR1 Register

	7	6	5	4	3	2	1	0
Bit symbol	M1V21	M1V20	M1V19	M1V18	M1V17	M1V16	M1V15-9	M1V8
Setting value	0	0	0	0	0	0	0	1

M1V21 to M1V16 and M1V8 bits of the memory address mask register MAMR1 set whether address A21 to A16 and A8 are compared or not. Set the register to "0" to compare, or to "1" not to compare. A23 and A22 are always compared.

Setting the above-mentioned compares A23 to A9 with the values set as the start addresses. Therefore 512 bytes of addresses 110000H to 1101FFH are set as the block address area 1, and compared with the addresses on the bus. If the compared result is a match, the chip select signal $\overline{CS1}$ is set to "low".

The other block address area sizes are specified like this.

Similarly, A23 is always compared in block address areas 2 to 3. Whether A22 to A15 are compared or not is set to register.

Note: When the set block address area overlaps with the built-in memory area, or both two address areas overlap, the block address area is processed according to priority as follows.

Built-in I/O > Built-in memory > Block address area 0 >1 > 2 > 3 > CSEX

Also that any accessed areas outside the address spaces set by $\overline{CS0}$ to $\overline{CS3}$ are processed as the CSEX space. Therefore, settings of CSEX apply for the control of wait cycles, data bus width, etc.

(2) Connection memory specification

Setting the BnOM1 to BnOM0 bit of the control register (BnCSH) specifies the memory type to be connected with the block address areas. The interface signal is output according to the set memory as follows. TMP92CM22 prohibit changing default (SRAM/ROM).

BnOM1, BnOM0 Bit (BnCSH register)

BnOM1	BnOM0	Function
0	0	SRAM/ROM (Default)
0	1	(Reserved)
1	0	(Reserved)
1	1	(Reserved)

(3) Data bus width specification

The data bus width is set for every block address area. The bus size is set by the BnBUS1 and BnBUS0 bits of the control register (BnCSH) as follows.

BnBUS Bit (BnCSH register)

BnBUS1	BnBUS0	Function
0	0	8-bit bus mode (Default)
0	1	16-bit bus mode
1	0	(Reserved)
1	1	(Reserved)

This way of changing the data bus size depending on the address being accessed is called “dynamic bus sizing”. The part where the data is output to is depended on the data size, the bus width and the start address.

Note: Since there is a possibility of abnormal writing/reading of the data if two memories with different bus width are put in consecutive address, do not execute a access to placed on both memories with one command.

Data Size (Bit)	Start Address	Data Width in Memory Side (Bit)	CPU Address	CPU Data	
				D15 to D8	D7 to D0
8	4n + 0	8/16	4n + 0	xxxxx	b7 to b0
	4n + 1	8	4n + 1	xxxxx	b7 to b0
		16	4n + 1	b7 to b0	xxxxx
	4n + 2	8/16	4n + 2	xxxxx	b7 to b0
	4n + 3	8	4n + 3	xxxxx	b7 to b0
		16	4n +3	b7 to b0	xxxxx
16	4n + 0	8	(1) 4n + 0	xxxxx	b7 to b0
			(2) 4n + 1	xxxxx	b15 to b8
		16	4n + 0	b15 to b8	b7 to b0
	4n + 1	8	(1) 4n + 1	xxxxx	b7 to b0
			(2) 4n + 2	xxxxx	b15 to b8
		16	(1) 4n + 1	b7 to b0	xxxxx
			(2) 4n + 2	xxxxx	b15 to b8
	4n + 2	8	(1) 4n + 2	xxxxx	b7 to b0
			(2) 4n + 1	xxxxx	b15 to b8
		16	4n + 2	b15 to b8	b7 to b0
	4n + 3	8	(1) 4n + 3	xxxxx	b7 to b0
			(2) 4n + 4	xxxxx	b15 to b8
		16	(1) 4n + 3	b7 to b0	xxxxx
			(2) 4n + 4	xxxxx	b15 to b8
32	4n + 0	8	(1) 4n + 0	xxxxx	b7 to b0
			(2) 4n + 1	xxxxx	b15 to b8
			(3) 4n + 2	xxxxx	b23 to b16
			(4) 4n + 3	xxxxx	b31 to b24
		16	(1) 4n + 0	b15 to b8	b7 to b0
			(2) 4n + 2	b31 to b24	b23 to b16
	4n + 1	8	(1) 4n + 0	xxxxx	b7 to b0
			(2) 4n + 1	xxxxx	b15 to b8
			(3) 4n + 2	xxxxx	b23 to b16
			(4) 4n + 3	xxxxx	b31 to b24
		16	(1) 4n + 1	b7 to b0	xxxxx
			(2) 4n + 2	b23 to b16	b15 to b8
			(3) 4n + 4	xxxxx	b31 to b24
	4n + 2	8	(1) 4n + 2	xxxxx	b7 to b0
			(2) 4n + 3	xxxxx	B15 to b8
			(3) 4n + 4	xxxxx	b23 to b16
			(4) 4n + 5	xxxxx	b31 to b24
		16	(1) 4n + 2	b15 to b8	b7 to b0
			(2) 4n + 4	b31 to b24	b23 to b16
	4n + 3	8	(1) 4n + 3	xxxxx	b7 to b0
			(2) 4n + 4	xxxxx	b15 to b8
			(3) 4n + 5	xxxxx	b23 to b16
			(4) 4n + 6	xxxxx	b31 to b24
		16	(1) 4n + 3	b7 to b0	xxxxx
			(2) 4n + 4	b23 to b16	b15 to b8
			(3) 4n + 6	xxxxx	b31 to b24

xxxxx: During a read, data input to the bus ignored. At write, the bus is at high impedance and the write strobe signal remains inactive.

(4) Wait control

The external bus cycle completes a wait of two states at least (100 ns at f_{SYS} = 20 MHz).

Setting the <BnWW2:0> and <BnWR2:0> of BnCSL specifies the number of waits in the read cycle and the write cycle. BnWW is set with the same method as BnWR.

BnWW/BnWR Bit (BnCSL Register)

BnWW2	BnWR1	BnWW0	Function
BnWR2	BnWW1	BnWR0	
0	0	1	2 states (0 waits) access fixed mode
0	1	0	3 states (1 wait) access fixed mode (Default)
1	0	1	4 states (2 waits) access fixed mode
1	1	0	5 states (3 waits) access fixed mode
0	1	1	$\overline{\text{WAIT}}$ pin input mode
Others			(Reserved)

(i) Waits number fixed mode

The bus cycle is completed with the set states. The number of states is selected from 2 states (0 waits) to 5 states (3 waits).

(ii) $\overline{\text{WAIT}}$ pin input mode

This mode samples the $\overline{\text{WAIT}}$ input pins. It continuously samples the $\overline{\text{WAIT}}$ pin state and inserts a wait if the pin is active. The bus cycle is minimum 2 states. The bus cycle is completed when the wait signal is non-active ("High" level) at 2 states. The bus cycle extends if the wait signal is active at 2 states and more.

If a lot of connected pertain ROM and etc. (Much data-output-flowting-time (tDF)), each other's data-bus-output-recovery-time is trouble. However, by setting BnREC of control register (BnCSH) , can to insert dummy cycle of 1-state just before first bus cycle of starting access another block address.

BnREC Bit (BnCSH register)

0	No dummy cycle is inserted (Default).
1	Dummy cycle is inserted.

- When not inserting a dummy (0 waits)

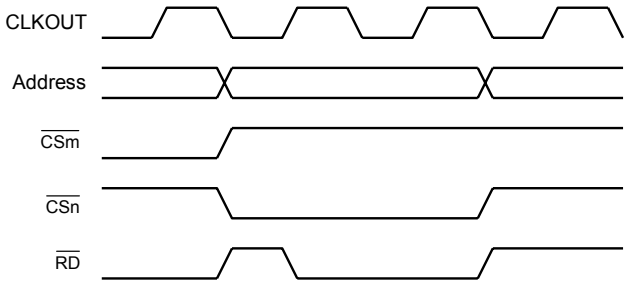

- When inserting a dummy cycle (0 waits)

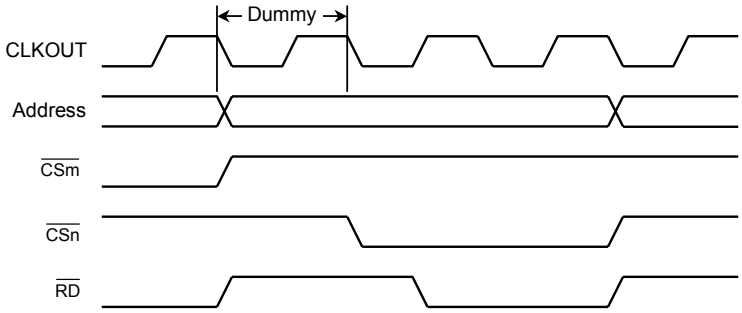

(5) Bus access timing

- External read/write bus cycle (0 waits)

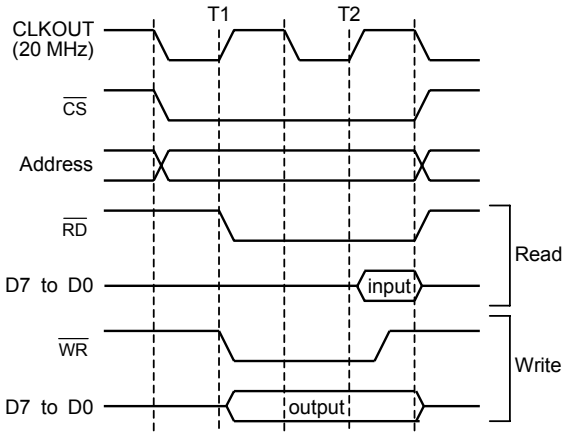

- External read/write bus cycle (1 wait)

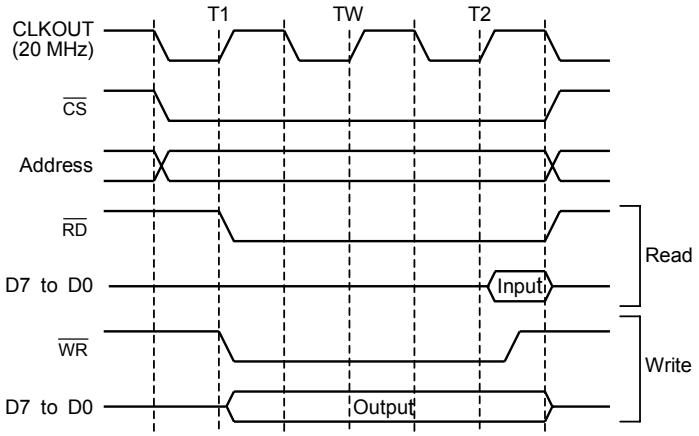

- External read/write bus cycle (0 waits at $\overline{\text{WAIT}}$ pin input mode)

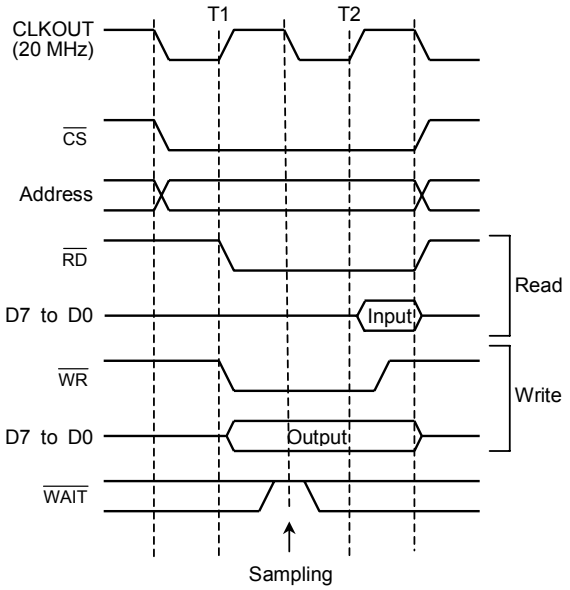

- External read/write bus cycle (n waits at $\overline{\text{WAIT}}$ pin input mode)

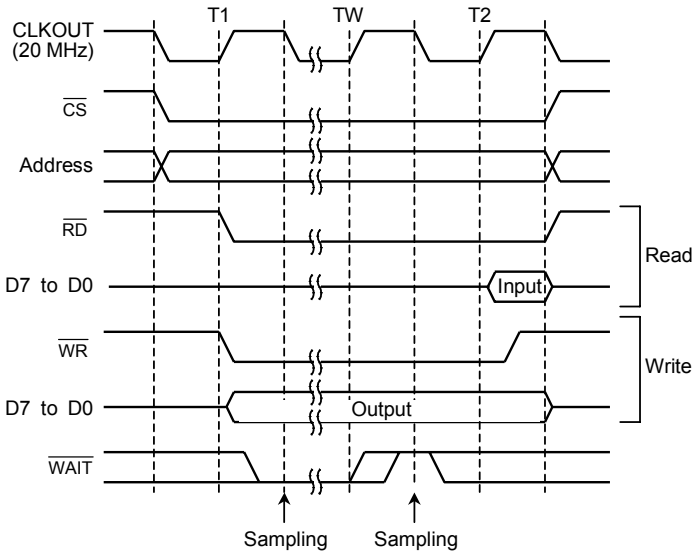

Example of $\overline{\text{WAIT}}$ input cycle (5 waits)

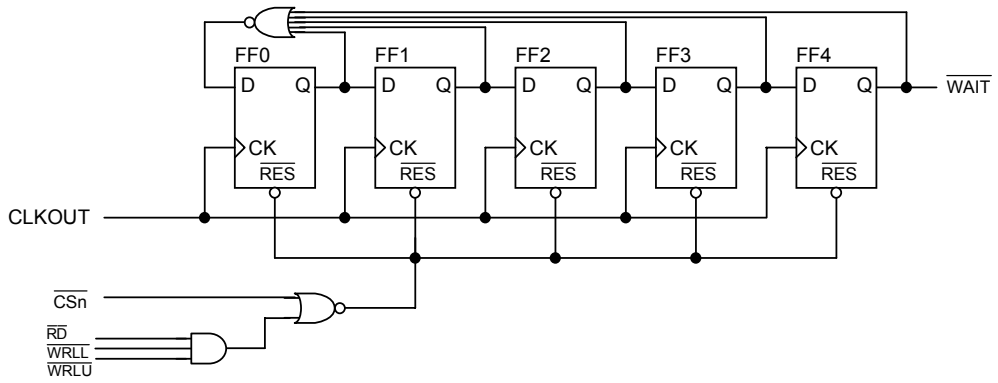

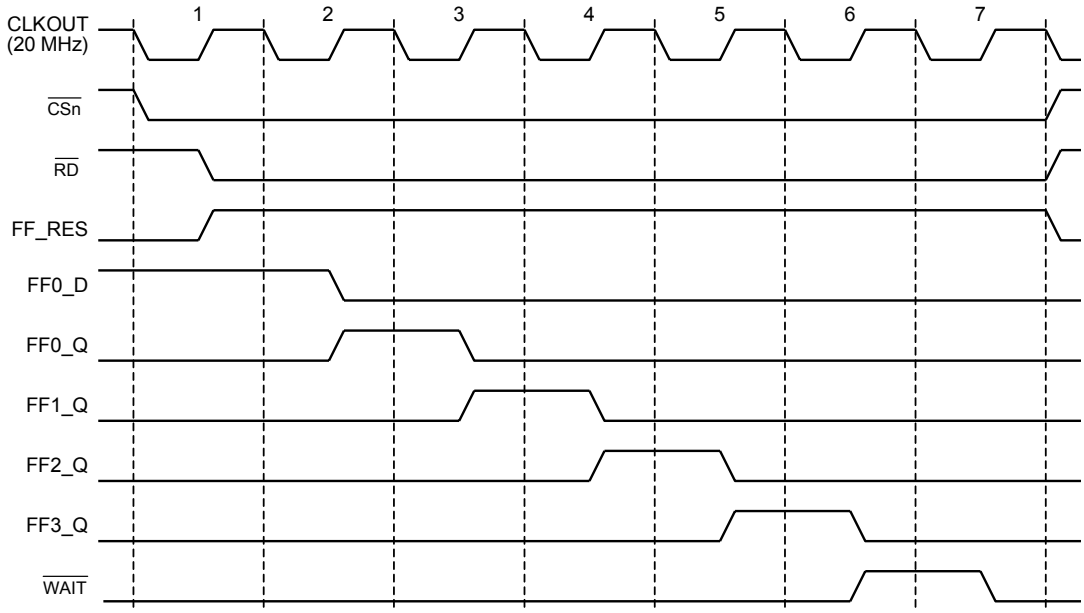

(6) Connecting external memory

Figure 3.6.1 shows an example of how to connect external memory to the TMP92CM22.

This example connects ROM and SRAM in 16-bit width.

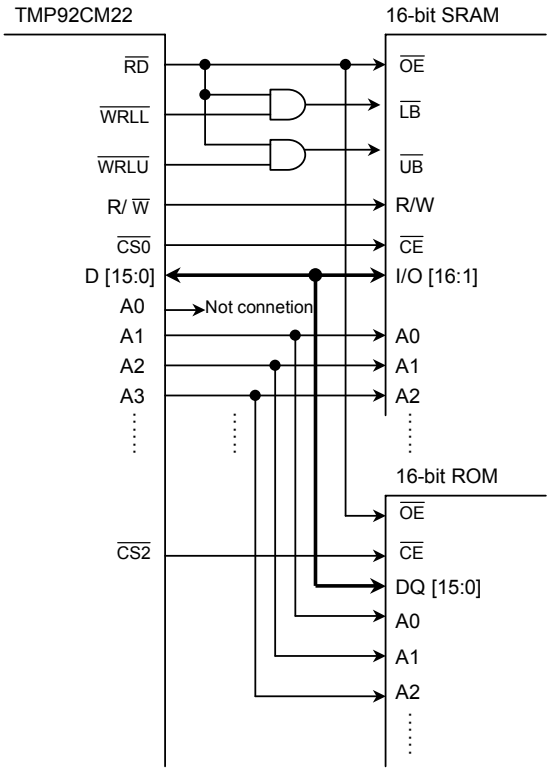

Figure 3.6.1 Example of External Memory

By resetting, TMP92CM22 function as output port. Output latch of P82 ($\overline{CS2}$) is cleared to "0", and output "L". Output latch of P80 ($\overline{CS0}$), P81 ($\overline{CS1}$) and P83 ($\overline{CS3}$) are set to "1", and output "H".

When set port 8 from port function to CS function, set need bit of P8FC register to "1".

Note: When set P82 as $\overline{CS2}$ after release reset, set function register remain output latch of P82 is "0" (P8<P82> = 0). (P8FC<P82F> = 1)

If set function register (P8FC<P82F> = 1) after set output latch of P82 to "1" (P8<P82> = 1), maybe don't read ROM data during changing from port function to $\overline{CS2}$.

3.6.4 ROM Control (Page mode)

This section describes ROM page mode accessing and how to set registers. ROM page mode is set by the page ROM control register.

(1) Operation and how to set the registers

TMP92CM22 supports ROM access of the page mode. The ROM access of the page mode is specified only in the block address area 2.

ROM page mode is set by the page ROM control register (PMEMCR). Setting <OPGE> of the PMEMCR register to "1" sets the memory access of the block address area to ROM page mode access.

The number of read cycles is set by the <OPWR1:0> bit of the PMEMCR register.

OPWR1/OPWR0 Bit (PMEMCR register)

OPWR1	OPWR0	Number of Cycle in A Page
0	0	1 state (n-1-1-1 mode) (n ≥ 2)
0	1	2 states (n-2-2-2 mode) (n ≥ 3)
1	0	3states (n-3-3-3 mode) (n ≥ 4)
1	1	(Reserved)

Note: Set the number of waits "n" to the control register (BnCSL) in each block address area.

The page size (The number of bytes) of ROM in the CPU side is set to the <PR1:0> of the PMEMCR register. When data is read out until a border of the set page, the controller completes the page reading operation. The start data of the next page is read in the normal cycle. The following data is set to page read again.

PR1/PR0 Bit (PMEMCR register)

PR1	PR0	ROM Page Size
0	0	64 bytes
0	1	32 bytes
1	0	16 bytes
1	1	8 bytes

(2) Signal pulse

For the signal timing pulse, refer to ROM read cycle in section 4.3.2.

3.6.5 List of Registers

The memory control registers and the settings are described as follows. For the addresses of the registers, see list of special function registers in section 5.

(1) Control registers

The control register is a pair of BnCSL and BnCSH. ("n" is a number of the block address area.) BnCSL has the same configuration regardless of the block address areas. In BnCSH, only B2CSH which is corresponded to the block address area 2 has a different configuration from the others.

BnCSL

	7	6	5	4	3	2	1	0
Bit symbol		BnWW2	BnWW1	BnWW0		BnWR2	BnWR1	BnWR0
Read/Write		W				W		
After reset		0	1	0		0	1	0

BnWW[2:0] Specifies the number of write waits.

001 = 2 states (0 waits) access
010 = 3 states (1 wait) access
101 = 4 states (2 waits) access
110 = 5 states (3 waits) access
011 = $\overline{\text{WAIT}}$ pin input mode
Others = (Reserved)

BnWR[2:0] Specifies the number of read waits.

001 = 2 states (0 waits) access
010 = 3 states (1 wait) access
101 = 4 states (2 waits) access
110 = 5 states (3 waits) access
011 = $\overline{\text{WAIT}}$ pin input mode
Others = (Reserved)

B2CSH

	7	6	5	4	3	2	1	0
Bit symbol	B2E	B2M		B2REC	B2OM1	B2OM0	B2BUS1	B2BUS0
Read/Write	W			W				
After reset	1	0		0	0	0	0	0

B2E Enable bit.

0 = No chip select signal output
1 = Chip select signal output (Default)

Note: After reset release, only the enable bit B2E of B2CSH register is valid ("1").

B2M Specifies the block address area.

0 = Sets the block address area of CS2 to addresses 000000H to FFFFFFH (Default)
1 = Sets the block address area of CS2 to programmable

Note: After reset release, the block address area 2 is set to addresses 000000H to FFFFFFH.

B2REC Sets the dummy cycle for data output recovery time.

0 = Not insert a dummy cycle (Default)

1 = Insert a dummy cycle

B2OM[1:0]

00 = SRAM or ROM (Default)

Others = (Reserved)

B2BUS[1:0] Sets the data bus width.

00 = 8 bits (Default)

01 = 16 bits

10 = (Reserved)

11 = (Reserved)

Note: The value of B2BUS bit is set according to the state of AM[1:0] pin after reset release.

BnCSH (n = 0, 1, 3)

	7	6	5	4	3	2	1	0
Bit symbol	BnE			BnREC	BnOM1	BnOM0	BnBUS1	BnBUS0
Read/Write	W			W				
After reset	0			0	0	0	0	0

BnE Enable bit.

0 = No chip select signal output (Default)

1 = Chip select signal output

Note: After reset release, only the enable bit B2E of B2CSH register is valid (“1”).

BnREC Sets the dummy cycle for data output recovery time.

0 = Not insert a dummy cycle (Default)

1 = Insert a dummy cycle

BnOM[1:0]

00 = SRAM or ROM (Default)

01 = (Reserved)

10 = (Reserved)

11 = (Reserved)

BnBUS[1:0] Sets the data bus width.

00 = 8 bits (Default)

01 = 16 bits

10 = (Reserved)

11 = (Reserved)

BEXCSL

	7	6	5	4	3	2	1	0
Bit symbol		BEXWW2	BEXWW1	BEXWW0		BEXWR2	BEXWR1	BEXWR0
Read/Write		W				W		
After reset		0	1	0		0	1	0

BEXWW[2:0] Specifies the number of write waits.

001 = 2 states (0 waits) access
010 = 3 states (1 wait) access
101 = 4 states (2 waits) access
110 = 5 states (3 waits) access
011 = $\overline{\text{WAIT}}$ pin input mode
Others = (Reserved)

BEXWR[2:0] Specifies the number of read waits.

001 = 2 states (0 waits) access
010 = 3 states (1 wait) access
101 = 4 states (2 waits) access
110 = 5 states (3 waits) access
011 = $\overline{\text{WAIT}}$ pin input mode
Others = (Reserved)

BEXCSH

	7	6	5	4	3	2	1	0
Bit Symbol		–	–	–	BEXOM1	BEXOM0	BEXBUS1	BEXBUS0
Read/Write		W			W			
After reset		Always write 0.			0	0	0	0

BEXOM[1:0]

00 = SRAM or ROM (Default)
01 = (Reserved)
10 = (Reserved)
11 = (Reserved)

BEXBUS[1:0]

00 = 8 bits (Default)
01 = 16 bits
10 = (Reserved)
11 = (Reserved)

(1) Block address area specification register

A start address and range in the block address are specified by the memory start address register (MSARn) and the memory address mask register (MAMRn). The memory start address register sets all start address similarly regardless of the block address areas. The bit to be set by the memory address mask register is depended on the block address area.

MSARn (n = 0 to 3)

	7	6	5	4	3	2	1	0
Bit symbol	MnS23	MnS22	MnS21	MnS20	MnS19	MnS18	MnS17	MnS16
Read/Write	R/W							
After reset	1	1	1	1	1	1	1	1

MnS<23:16>

Sets a start address.

Sets the start address of the block address areas. The bit are corresponding to the address A23 to A16.

MAMR0

	7	6	5	4	3	2	1	0
Bit symbol	M0V20	M0V19	M0V18	M0V17	M0V16	M0V15	M0V14-9	M0V8
Read/Write	R/W							
After reset	1	1	1	1	1	1	1	1

M0V<20:8>

Enables or masks comparison of the addresses. M0V20 to M0V8 are corresponding to addresses A20 to A8. The bit of M0V14 to M0V9 is corresponding to address A14 to A9 by 1 bits. If “0” is set, the comparison between the value of the address bus and the start address is enabled. If “1” is set, the comparison is masked.

MAMR1

	7	6	5	4	3	2	1	0
Bit symbol	M1V21	M1V20	M1V19	M1V18	M1V17	M1V16	M1V15-9	M1V8
Read/Write	R/W							
After reset	1	1	1	1	1	1	1	1

M1V<21:8>

Enables or masks comparison of the addresses. M1V21 to M1V8 are corresponding to addresses A21 to A8. The bits of M1V15 to M1V9 are corresponding to address A15 to A9 by 1 bit. If “0” is set, the comparison between the value of the address bus and the start address is enabled. If “1” is set, the comparison is masked.

MAMRn (n = 2 to 3)

	7	6	5	4	3	2	1	0
Bit symbol	MnV22	MnV21	MnV20	MnV19	MnV18	MnV17	MnV16	MnV15
Read/Write	R/W							
After reset	1	1	1	1	1	1	1	1

MnV<22:15>

Enables or masks comparison of the addresses. MnV22 to MnV15 are corresponding to addresses A22 to A15. If “0” is set, the comparison between the value of the address bus and the start address is enabled. If “1” is set, the comparison is masked.

After a reset, MASR0 to MASR3 and MAMR0 to MAMR3 are set to “FFH”. B0CSH<B0E>, B1CSH<B1E>, and B3CSH<B3E> are reset to “0”. This disables the CS0, CS1, and CS3 areas. However, B2CSH<B2M> is reset to “0” and B2CSH<B2E> to “1”, and CS2 is enabled 000000H to FFFFFFH. Also the bus width and the number of waits specified in BEXCSH/L are used for accessing address except the specified CS0 to CS3 area.

(2) Page ROM control register (PMEMCR)

The page ROM control register sets page ROM accessing. ROM page accessing is executed only in block address area 2.

PMEMCR

	7	6	5	4	3	2	1	0
Bit symbol				OPGE	OPWR1	OPWR0	PR1	PR0
Read/Write				R/W				
After reset				0	0	0	1	0

OPGE Enable bit.

0 = No ROM page mode accessing (Default)

1 = ROM page mode accessing

OPWR [1:0] Specifies the number of waits.

00 = 1 state (n-1-1-1 mode) (n ≥ 2) (Default)

01 = 2 states (n-2-2-2 mode) (n ≥ 3)

10 = 3 states (n-3-3-3 mode) (n ≥ 4)

11 = (Reserved)

Note: Set the number of waits “n” to the control register (BnCSL) in each block address area.

PR[1:0] ROM page size.

00 = 64 bytes

01 = 32 bytes

10 = 16 bytes (Default)

11 = 8 bytes

Table 3.6.1 Control Register

		7	6	5	4	3	2	1	0
B0CSL	Bit symbol		B0WW2	B0WW1	B0WW0		B0WR2	B0WR1	B0WR0
(0140H)	Read/Write		W				W		
	After reset		0	1	0		0	1	0
B0CSH	Bit symbol	B0E	–	–	B0REC	B0OM1	B0OM0	B0BUS1	B0BUS0
(0141H)	Read/Write	W							
	After reset	0	0 (Note)	0 (Note)	0	0	0	0	0
MAMR0	Bit symbol	M0V20	M0V19	M0V18	M0V17	M0V16	M0V15	M0V14-V9	M0V8
(0142H)	Read/Write	R/W							
	After reset	1	1	1	1	1	1	1	1
MSAR0	Bit symbol	M0S23	M0S22	M0S21	M0S20	M0S19	M0S18	M0S17	M0S16
(0143H)	Read/Write	R/W							
	After reset	1	1	1	1	1	1	1	1
B1CSL	Bit symbol		B1WW2	B1WW1	B1WW0		B1WR2	B1WR1	B1WR0
(0144H)	Read/Write		W				W		
	After reset		0	1	0		0	1	0
B1CSH	Bit symbol	B1E	–	–	B1REC	B1OM1	B1OM0	B1BUS1	B1BUS0
(0145H)	Read/Write	W							
	After reset	0	0 (Note)	0 (Note)	0	0	0	0	0
MAMR1	Bit symbol	M1V21	M1V20	M1V19	M1V18	M1V17	M1V16	M1V15-V9	M1V8
(0146H)	Read/Write	R/W							
	After reset	1	1	1	1	1	1	1	1
MSAR1	Bit symbol	M1S23	M1S22	M1S21	M1S20	M1S19	M1S18	M1S17	M1S16
(0147H)	Read/Write	R/W							
	After reset	1	1	1	1	1	1	1	1
B2CSL	Bit symbol		B2WW2	B2WW1	B2WW0		B2WR2	B2WR1	B2WR0
(0148H)	Read/Write		W				W		
	After reset		0	1	0		0	1	0
B2CSH	Bit symbol	B2E	B2M	–	B2REC	B2OM1	B2OM0	B2BUS1	B2BUS0
(0149H)	Read/Write	W							
	After reset	1	0	0 (Note)	0	0	0	0	0
MAMR2	Bit symbol	M2V22	M2V21	M2V20	M2V19	M2V18	M2V17	M2V16	M2V15
(014AH)	Read/Write	R/W							
	After reset	1	1	1	1	1	1	1	1
MSAR2	Bit symbol	M2S23	M2S22	M2S21	M2S20	M2S19	M2S18	M2S17	M2S16
(014BH)	Read/Write	R/W							
	After reset	1	1	1	1	1	1	1	1
B3CSL	Bit symbol		B3WW2	B3WW1	B3WW0		B3WR2	B3WR1	B3WR0
(014CH)	Read/Write		W				W		
	After reset		0	1	0		0	1	0
B3CSH	Bit symbol	B3E	–	–	B3REC	B3OM1	B3OM0	B3BUS1	B3BUS0
(014DH)	Read/Write	W							
	After reset	0	0 (Note)	0 (Note)	0	0	0	0	0
MAMR3	Bit symbol	M3V22	M3V21	M3V20	M3V19	M3V18	M3V17	M3V16	M3V15
(014EH)	Read/Write	R/W							
	After reset	1	1	1	1	1	1	1	1
MSAR3	Bit symbol	M3S23	M3S22	M3S21	M3S20	M3S19	M3S18	M3S17	M3S16
(014FH)	Read/Write	R/W							
	After reset	1	1	1	1	1	1	1	1
BEXCSH	Bit symbol					BEXOM1	BEXOM0	BEXBUS1	BEXBUS0
(0159H)	Read/Write					W			
	After reset					0	0	0	0
BEXCSL	Bit symbol		BEXWW2	BEXWW1	BEXWW0		BEXWR2	BEXWR1	BEXWR0
(0158H)	Read/Write		W				W		
	After reset		0	1	0		0	1	0
PMEMCR	Bit symbol				OPGE	OPWR1	OPWR0	PR1	PR0
(0166H)	Read/Write				R/W				
	After reset				0	0	0	1	0

Note1: Always write “0”.

Note2: Read-modify-write instruction is prohibited for BnCSL, BnCSH registers (n=0 to 3, EX).

3.6.6 Caution

If the parasitic capacitance of the read signal (Output enable signal) is greater than that of the chip select signal, it is possible that an unintended read cycle occurs due to a delay in the read signal. Such an unintended read cycle may cause a trouble as in the case of (a) in Figure 3.6.1

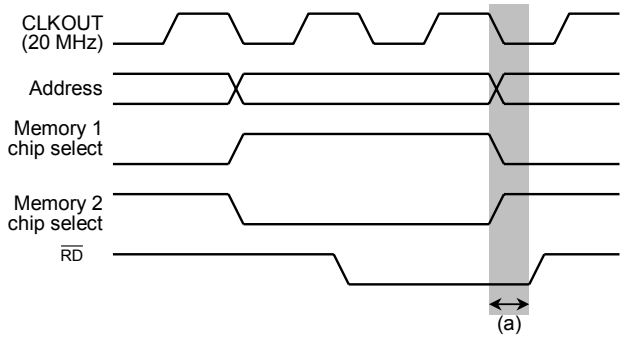

Figure 3.6.2 Read Signal Delay Read Cycle

Example: When using an externally connected flash EEPROM which users JEDEC standard commands, note that the toggle bit may not be read out correctly. If the read signal in the cycle immediately preceding the access to the flash EEPROM does not go "high" in time, as shown in Figure 3.6.3 an unintended read cycle like the one shown in (b) may occur.

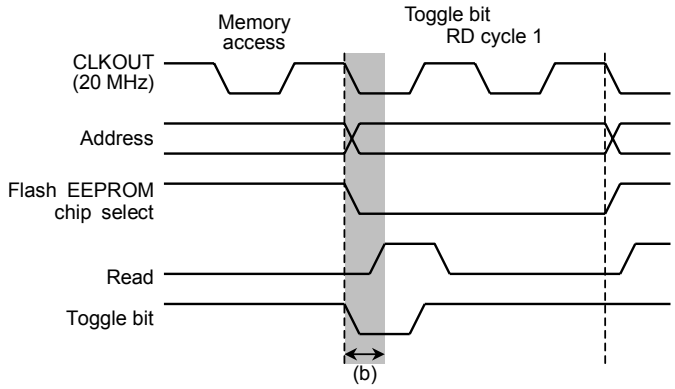

Figure 3.6.3 Flash EEPROM Toggle Bit Read Cycle

When the toggle bit reverse with this unexpected read cycle, TMP92CM22 always reads same value of the toggle bit, and cannot read the toggle bit correctly. To avoid this phenomenon, the data polling control recommended.

3.7 8-Bit Timers (TMRA)

The TMP92CM22 features 4 built-in 8-bit timers.
These timers are paired into four modules: TMRA01 and TMRA23. Each module consists of two channels and can operate in any of the following four operating modes.

- 8-bit interval timer mode
- 16-bit interval timer mode
- 8-bit programmable square wave pulse generation output mode (PPG: Variable duty cycle with variable period)
- 8-bit pulse width modulation output mode (PWM: Variable duty cycle with constant period)

Figure 3.7.1 to Figure 3.7.2 show block diagrams for TMRA01 and TMRA23.

Each channel consists of an 8-bit up counter, an 8-bit comparator and an 8-bit timer register. In addition, a timer flip-flop and a prescaler are provided for each pair of channels.

The operation mode and timer flip-flops are controlled by five controls SFR (Special-function registers).

Each of the two modules (TMRA01 and TMRA23) can be operated independently. All modules operate in the same manner; hence only the operation of TMRA01 is explained here.

The contents of this chapter are as follows.

3.7.1 Block diagrams
3.7.2 Operation of Each Circuit
3.7.3 SFRs
3.7.4 Operation in Each Mode
(1) 8-bit timer mode
(2) 16-bit timer mode
(3) 8-bit PPG (Programmable pulse generation) output mode
(4) 8-bit PWM (Pulse width modulation) output mode
(5) Mode settings

Table 3.7.1 Registers and Pins for Each Module

Specification \ Module		Timer A01	Timer A23
External pin	Input pin for external clock	TA0IN (Shared with PC0)	None
	Output pin for timer flip-flop	TA1OUT (Shared with PC1)	TA3OUT (Shared with PC5)
SFR (Address)	Timer RUN register	TA01RUN (1100H)	TA23RUN (1108H)
	Timer register	TA0REG (1102H) TA1REG (1103H)	TA2REG (110AH) TA3REG (110BH)
	Timer mode register	TA01MOD (1104H)	TA23MOD (110CH)
	Timer flip-flop control register	TA1FFCR (1105H)	TA3FFCR (110DH)

3.7.1 Block Diagrams

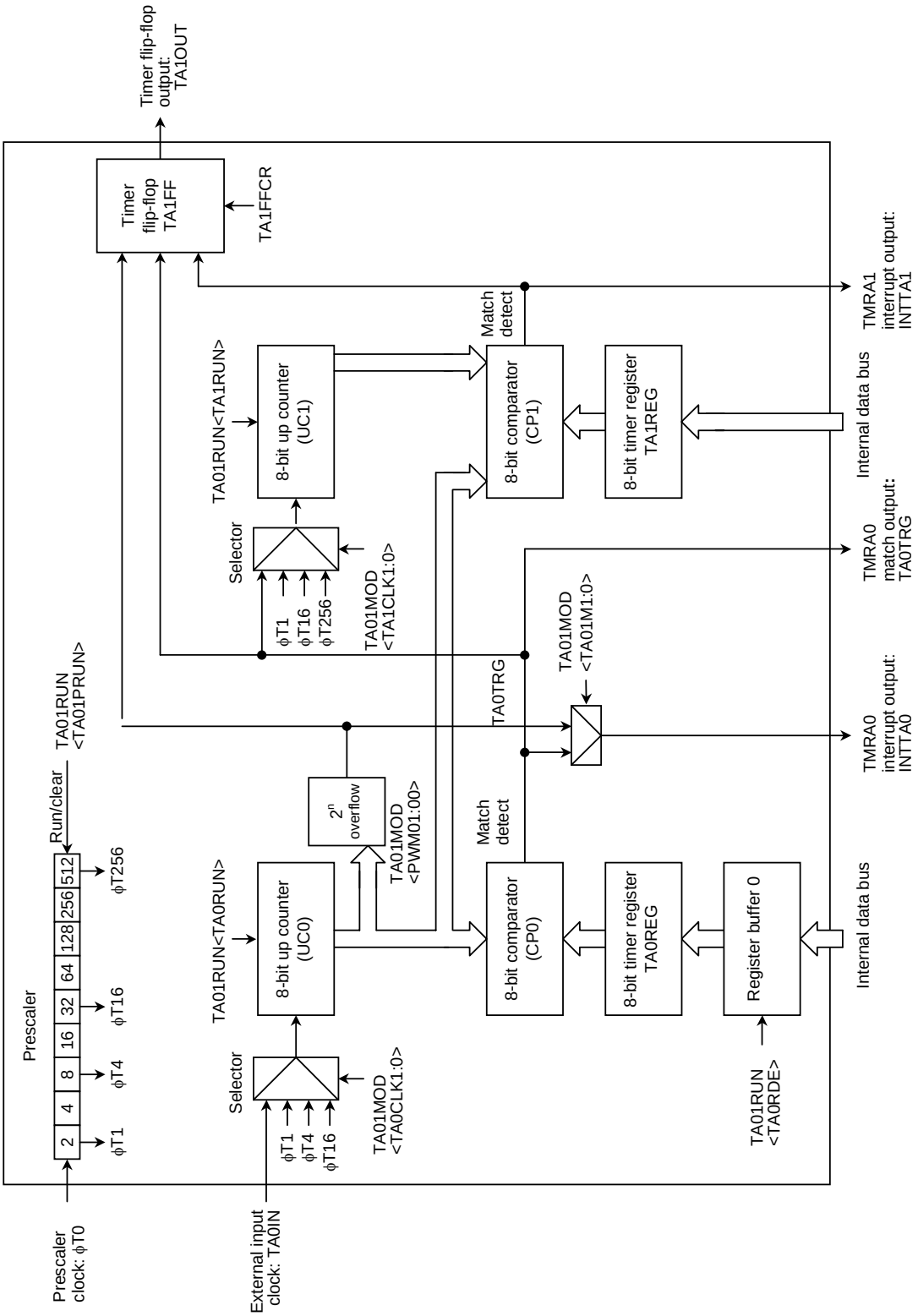

Figure 3.7.1 TMRA01 Block Diagram

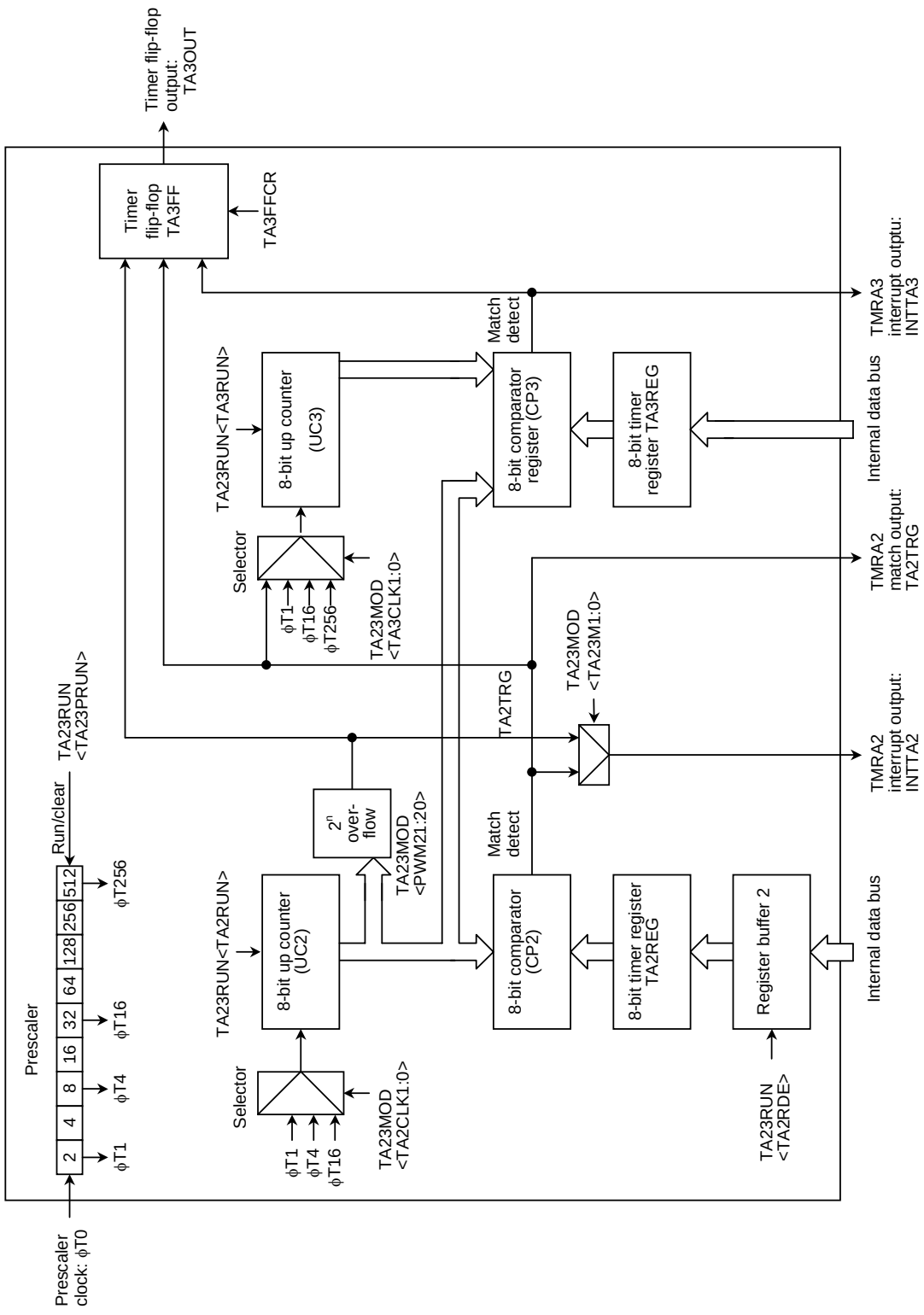

Figure 3.7.2 TMRA23 Block Diagram

3.7.2 Operation of Each Circuit

(1) Prescaler

A 9-bit prescaler generates the input clock to TMRA01.

The prescaler's operation can be controlled using TA01RUN<TA0PRUN> in the timer control register. Setting <TA0PRUN> to "1" starts the count; setting <TA0PRUN> to "0" clears the prescaler to zero and stops operation. Table 3.7.2 shows the various prescaler output clock resolutions.

Table 3.7.2 Prescaler Output Clock Resolution

at f_{SYS} = 20 MHz

Gear Value <GEAR2:0>	Cycle			
	ϕT1	ϕT4	ϕT16	ϕT256
000 (f_{SYS})	$2^3/f_{SYS}$ (0.4 μs)	$2^5/f_{SYS}$ (1.6 μs)	$2^7/f_{SYS}$ (6.4 μs)	$2^{11}/f_{SYS}$ (102.4 μs)
001 ($f_{SYS}/2$)	$2^4/f_{SYS}$ (0.8 μs)	$2^6/f_{SYS}$ (3.2 μs)	$2^8/f_{SYS}$ (12.8 μs)	$2^{12}/f_{SYS}$ (204.8 μs)
010 ($f_{SYS}/4$)	$2^5/f_{SYS}$ (1.6 μs)	$2^7/f_{SYS}$ (6.4 μs)	$2^9/f_{SYS}$ (25.6 μs)	$2^{13}/f_{SYS}$ (409.6 μs)
011 ($f_{SYS}/8$)	$2^6/f_{SYS}$ (3.2 μs)	$2^8/f_{SYS}$ (12.8 μs)	$2^{10}/f_{SYS}$ (51.2 μs)	$2^{14}/f_{SYS}$ (819.2 μs)
100 ($f_{SYS}/16$)	$2^7/f_{SYS}$ (6.4 μs)	$2^9/f_{SYS}$ (25.6 μs)	$2^{11}/f_{SYS}$ (102.4 μs)	$2^{15}/f_{SYS}$ (1638.4 μs)

(2) Up counters (UC0 and UC1)

These are 8-bit binary counters which count up the input clock pulses for the clock specified by TA01MOD.
The input clock for UC0 is selectable and can be either the external clock input via the TA0IN pin or one of the three internal clocks ϕT1, ϕT4, or ϕT16. The clock setting is specified by the value set in TA01MOD<TA01CLK1:0>.

The input clock for UC1 depends on the operation mode. In 16-bit timer mode, the overflow output from UC0 is used as the input clock. In any mode other than 16-bit timer mode, the input clock is selectable and can either be one of the internal clocks ϕT1, ϕT16, or ϕT256, or the comparator output (The match detection signal) from TMRA0.

For each interval timer the timer operation control register bits TA01RUN<TA0RUN> and TA01RUN<TA1RUN> can be used to stop and clear the up counters and to control their count. A reset release both up counters, stopping the timers.

(3) Timer registers (TA0REG and TA1REG)

These are 8-bit registers, which can be used to set a time interval. When the value set in the timer register TA0REG or TA1REG matches the value in the corresponding up counter, the comparator match detect signal goes Active. If the value set in the timer register is 00H, the signal goes active when the up counter overflows.

The TA0REG are double buffer structure, each of which makes a pair with register buffer.

The setting of the bit TA01RUN<TA0RDE> determines whether TA0REG's double buffer structure is enabled or disabled. It is disabled if <TA0RDE> = "0" and enabled if <TA0RDE> = "1".

When the double buffer is enabled, data is transferred from the register buffer to the timer register when a 2^n overflow occurs in PWM mode, or at the start of the PPG cycle in PPG mode. Hence the double buffer cannot be used in timer mode.

A reset initializes <TA0RDE> to "0", disabling the double buffer. To use the double buffer, write data to the timer register, set <TA0RDE> to "1", and write the following data to the register buffer Figure 3.7.3 show the configuration of TA0REG

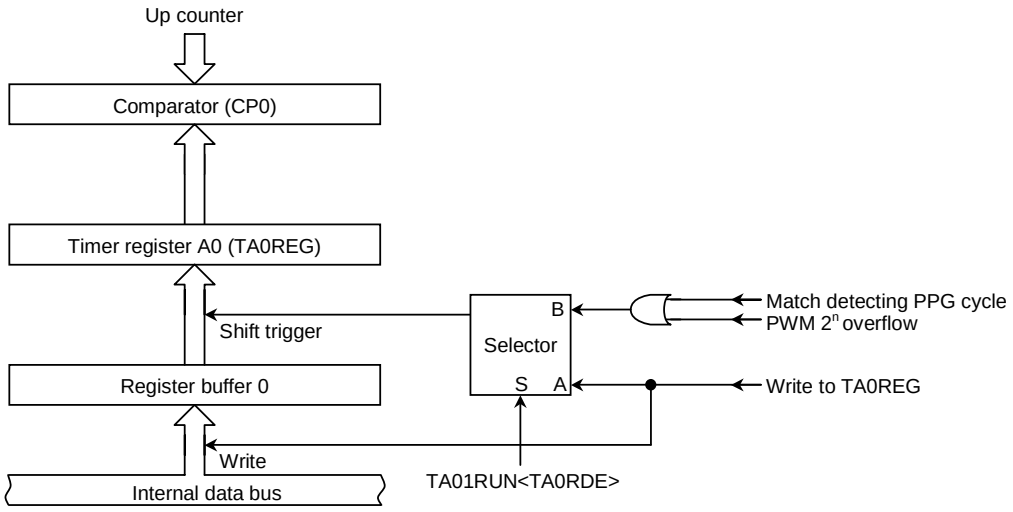

Figure 3.7.3 Timer Register A0 (TA0REG)

Note: The same memory address is allocated to the timer register and the register buffer. When <TA0RDE> = 0, the same value is written to the register buffer and the timer register; when <TA0RDE> = 1, only the register buffer is written to.

The address of each timer register is as follows.

TA0REG: 001102H TA1REG: 001103H

TA2REG: 00110AH TA3REG: 00110BH

All these registers are write-only and cannot be read.

(4) Comparator (CP0)

The comparator compares the value in an up counter with the value set in a timer register. If they match, the up counter is cleared to 0 and an interrupt signal (INTTA0 or INTTA1) is generated. If timer flip-flop inversion is enabled, the timer flip-flop is inverted at the same time.

(5) Timer flip-flop (TA1FF)

The timer flip-flop (TA1FF) is a flip-flop inverted by the match detects signal (8-bit comparator output) of each interval timer.

Whether inversion is enabled or disabled is determined by the setting of the bit TA1FFCR<TA1FFIE> in the timer flip-flops control register. A reset clears the value of TA1FF to “0”. Programming “01” or “10” to TA1FFCR<TA1FFC1:0> sets TA1FF to 0 or 1. Programming “00” to these bits inverts the value of TA1FF. (This is known as software inversion.)

The TA1FF signal is output via the TA1OUT pin (which can also be used as PC1). When this pin is used as the timer output, the timer flip-flop should be set beforehand using the port C function register PCFC.

3.7.3 SFRs

TMRA01 Run Register

TA01RUN (1100H)	7	6	5	4	3	2	1	0
Bit symbol	TA0RDE				I2TA01	TA01PRUN	TA1RUN	TA0RUN
Read/Write	R/W				R/W			
After reset	0				0	0	0	0
Function	Double buffer 0: Disable 1: Enable				IDLE2 0: Stop 1: Operate	8-bit timer run/stop control 0: Stop and clear 1: Run (Count up)		

TA0REG double buffer control

0	Disable
1	Enable

Count operation

0	Stop and clear
1	Count

I2TA01: Operation in IDLE2 mode
TA01PRUN: Run prescaler
TA1RUN: Run TMRA1
TA0RUN: Run TMRA0

Note: The values of bits 4 to 6 of TA01RUN are undefined when read.

TMRA23 Run Register

TA23RUN (1108H)	7	6	5	4	3	2	1	0
Bit symbol	TA2RDE				I2TA23	TA23PRUN	TA3RUN	TA2RUN
Read/Write	R/W				R/W			
After reset	0				0	0	0	0
Function	Double buffer 0: Disable 1: Enable				IDLE2 0: Stop 1: Operate	8-bit timer run/stop control 0: Stop and clear 1: Run (Count up)		

TA2REG double buffer control

0	Disable
1	Enable

Count operation

0	Stop and clear
1	Count

I2TA23: Operation in IDLE2 mode
TA23PRUN: Run prescaler
TA3RUN: Run TMRA3
TA2RUN: Run TMRA2

Note: The values of bits 4 to 6 of TA23RUN are undefined when read.

Figure 3.7.4 Register for TMRA

TMRA01 Mode Register

TA01MOD (1104H)	7	6	5	4	3	2	1	0
Bit symbol	TA01M1	TA01M0	PWM01	PWM00	TA1CLK1	TA1CLK0	TA0CLK1	TA0CLK0
Read/Write	R/W							
After reset	0	0	0	0	0	0	0	0
Function	Operation mode 00: 8-bit timer mode 01: 16-bit timer mode 10: 8-bit PPG mode 11: 8-bit PWM mode		PWM cycle 00: Reserved 01: 2^6 10: 2^7 11: 2^8		TMRA1 source clock 00: TA0TRG 01: ϕT1 10: ϕT16 11: ϕT256		TMRA0 source clock 00: TA0IN pin input (Note) 01: ϕT1 10: ϕT4 11: ϕT16	

TMRA0 input clock

00	TA0IN (External input)
01	ϕT1 (Prescaler)
10	ϕT4 (Prescaler)
11	ϕT16 (Prescaler)

TMRA1 input clock

	TA01MOD <TA01M1:0> $\neq$ 01	TA01MOD <TA01M1:0> = 01
00	Matching output for TMRA0	Overflow output for TMRA0
01	ϕT1	
10	ϕT16	
11	ϕT256	(16-bit timer mode)

Select cycle in PWM mode

00	Reserved
01	$2^6 \times$ Clock source
10	$2^7 \times$ Clock source
11	$2^8 \times$ Clock source

Select operation mode for TMR01

00	Two 8-bit timers
01	16-bit timer
10	8-bit PPG
11	8-bit PWM (TMRA0), 8-bit timer (TMRA1)

Note: When set TA0IN pin, set TA01MOD after set port C.

Figure 3.7.5 Register for TMRA01

TMRA23 Mode Register

TA23MOD (110CH)	7	6	5	4	3	2	1	0
Bit symbol	TA23M1	TA23M0	PWM21	PWM20	TA3CLK1	TA3CLK0	TA2CLK1	TA2CLK0
Read/Write	R/W							
After reset	0	0	0	0	0	0	0	0
Function	Operation mode 00: 8-bit timer mode 01: 16-bit timer mode 10: 8-bit PPG mode 11: 8-bit PWM mode		PWM cycle 00: Reserved 01: 2^6 10: 2^7 11: 2^8		TMRA3 source clock 00: TA2TRG 01: ϕT1 10: ϕT16 11: ϕT256		TMRA2 source clock 00: Reserved 01: ϕT1 10: ϕT4 11: ϕT16	

TMRA2 input clock

00	Don't set
01	ϕT1 (Prescaler)
10	ϕT4 (Prescaler)
11	ϕT16 (Prescaler)

TMRA3 input clock

	TA23MOD <TA23M1:0> $\neq$ 01	TA23MOD <TA23M1:0> = 01
00	Matching output for TMRA2	Overflow output for TMRA2 (16−bit timer mode)
01	ϕT1	
10	ϕT16	
11	ϕT256	

Select cycle in PWM mode

00	Reserved
01	$2^6 \times$ Clock source
10	$2^7 \times$ Clock source
11	$2^8 \times$ Clock source

Select operation mode for TMRA23

00	Two 8-bit timer
01	16-bit timer
10	8-bit PPG
11	8-bit PWM (TMRA2), 8-bit timer (TMRA3)

Figure 3.7.6 Register for TMRA23

TMRA1 Flip Flop Control Register

TA1FFCR (1105H)		7	6	5	4	3	2	1	0
	Bit symbol					TA1FFC1	TA1FFC0	TA1FFCIE	TA1FFCIS
	Read/Write					R/W			
	After reset					1	1	0	0
Read-modify -write instruction is prohibited.	Function					00: Invert TA1FF 01: Set TA1FF to “1” 10: Clear TA1FF to “0” 11: Don’t care		TA1FF control for inversion 0: Disable 1: Enable	TA1FF Inversion signal select 0: TMRA0 1: TMRA1

Inversion signal for timer flip-flop 1 (TA1FF)
(Don’t care except in 8-bit timer mode)

0	Inversion by TMRA0
1	Inversion by TMRA1

TA1FF control for inversion

0	Disable inversion
1	Enable inversion

TFF1 control

00	Invert TA1FF
01	Set TA1FF to “1”
10	Clear TA1FF to “0”
11	Don’t care

Note: The values of bits 4 to 7 of TA1FFCR are undefined when read.

Figure 3.7.7 Register for TMRA

TMRA3 Flip-Flop Control Register

		7	6	5	4	3	2	1	0
TA3FFCR (110DH)	Bit symbol					TA3FFC1	TA3FFC0	TA3FFCIE	TA3FFCIS
	Read/Write					R/W			
	After reset					1	1	0	0
Read-modify -write instruction is prohibited.	Function					00: Invert TA3FF 01: Set TA3FF to “1” 10: Clear TA3FF to “0” 11: Don’t care		TA3FF control for inversion 0: Disable 1: Enable	TA3FF inversion select 0: TMRA2 1: TMRA3

Inverse signal for timer flip-flop 3 (TA3FF)
(Don’t care except in 8-bit timer mode)

0	Invert TMRA2
1	Invert TMRA3

TA3FF control for inversion

0	Disable inversion
1	Enable inversion

TA3FF control

00	Invert TA3FF
01	Set TA3FF to “1”
10	Clear TA3FF to “0”
11	Don’t care

Note: The values of bits 4 to 7 of TA3FFCR are undefined when read.

Figure 3.7.8 Register for TMRA

Timer Register (TA0REG to TA3REG)

Symbol	Address	7	6	5	4	3	2	1	0
TA0REG	1102H	–							
		W							
		Undefined							
TA1REG	1103H	–							
		W							
		Undefined							
TA2REG	110AH	–							
		W							
		Undefined							
TA3REG	110BH	–							
		W							
		Undefined							

Note: Read-modify-write instruction is prohibited for above registers.

Figure 3.7.9 Register for TMRA

3.7.4 Operation in Each Mode

(1) 8-bit timer mode

Both TMRA0 and TMRA1 can be used independently as 8-bit interval timers.

When set function and count data, TMRA0 and TMRA1 should be stopped.

1. Generating interrupts at a fixed interval (using TMRA1)

To generate interrupts at constant intervals using TMRA1 (INTTA1), first stop TMRA1 then set the operation mode, input clock and a cycle to TA01MOD and TA1REG register, respectively. Then, enable the interrupt INTTA1 and start TMRA1 counting.

Example: To generate an INTTA1 interrupt every 40 μs at f_{SYS} = 20 MHz, set each register as follows:

		MSB 7	6	5	4	3	2	1	LSB 0	
TA01RUN	←	–	X	X	X	–	–	0	–	Stop TMRA1 and clear it to 0.
TA01MOD	←	0	0	X	X	0	1	–	–	Select 8-bit timer mode and select φT1 (0.4 μs at f_{SYS} = 20 MHz) as the input clock.
TA1REG	←	0	1	1	0	0	1	0	0	Set 40 μs ÷ φT1 = 100 = 64H to TAREG.
INTETA01	←	X	1	0	1	–	–	–	–	Enable INTTA1 and set it to Level 5.
TA01RUN	←	–	X	X	X	–	1	1	–	Start TMRA1 counting.

X : Don't care, – : No change

Select the input clock refer to Table 3.7.3.

Table 3.7.3 Selecting Interrupt Interval and the Input Clock Using 8-Bit Timer

Input clock	Interrupt Interval (at f_{SYS} = 20 MHz)	Resolution
φT1 (8/f_{SYS})	0.4 μs to 102.4 μs	0.4 μs
φT4 (32/f_{SYS})	1.6 μs to 409.6 μs	1.6 μs
φT16 (128/f_{SYS})	6.4 μs to 1.639 ms	6.4 μs
φT256 (2048/f_{SYS})	102.4 μs to 26.22 ms	102.4 μs

Note: The input clocks for TMRA0 and TMRA1 differ as follows:

TMRA0: Uses TMRA0 input (TA0IN) and can be selected from φT1, φT4, or φT16.

TMRA1: Match output of TMRA0 (TA0TRG) and can be selected from φT1, φT16, φT256.

2. Generating a 50% duty ratio square wave pulse

The state of the timer flip-flop (TA1FF1) is inverted at constant intervals and its status output via the timer output pin (TA1OUT).

Example: To output a 2.4 μs square wave pulse from the TA1OUT pin at f_{SYS} = 20 MHz, use the following procedure to make the appropriate register settings. This example uses TMRA1; however, either TMRA0 or TMRA1 may be used.

		MSB 7	6	5	4	3	2	1	LSB 0	
TA01RUN	←	–	X	X	X	–	–	0	–	Stop TMRA1 and clear it to 0.
TA01MOD	←	0	0	X	X	0	1	–	–	Select 8-bit timer mode and select φT1 (0.4 μs at f_{SYS} = 20 MHz) as the input clock.
TA1REG	←	0	0	0	0	0	0	1	1	Set the timer register to 2.4 μs ÷ φT1 ÷ 2 = 3.
TA1FFCR	←	X	X	X	X	1	0	1	1	Clear TA1FF to 0 and set it to invert on the match detect signal from TMRA1.
PCCR	←	X	–	–	X	–	X	1	–	Set PC1 to function as the TA1OUT pin.
PCFC	←	X	–	–	X	–	X	1	–	
TA01RUN	←	–	X	X	X	–	1	1	–	Start TMRA1 counting.

X : Don't care, – : No change

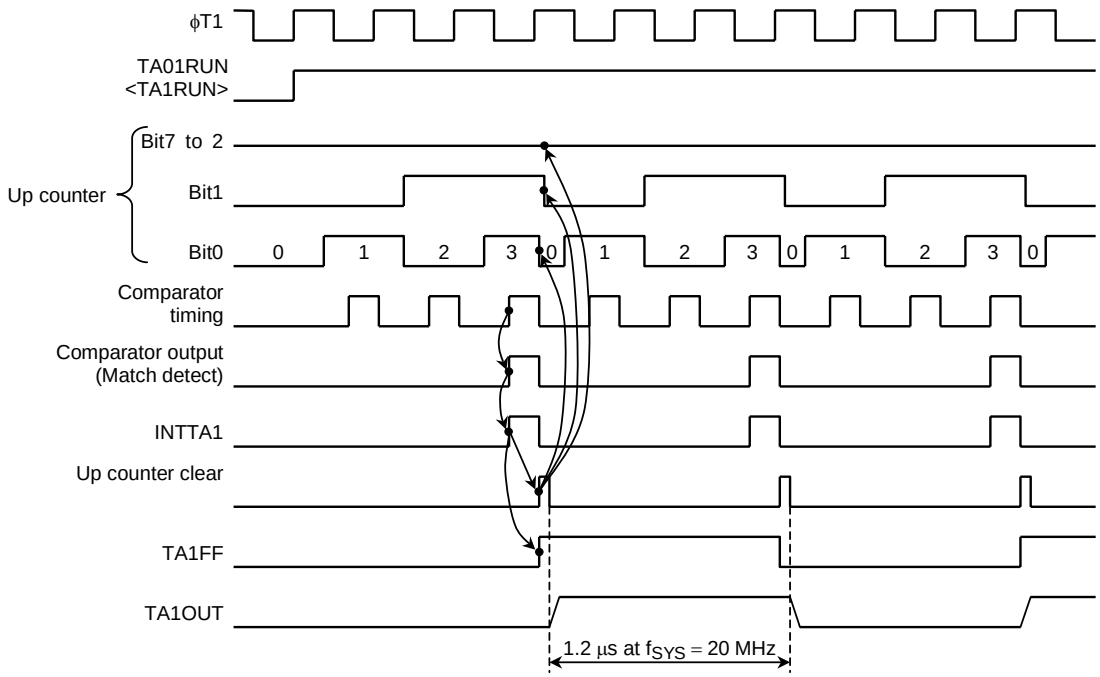

Figure 3.7.10 Square Wave Output Timing Chart (50% duty)

3. Making TMRA1 count up on the match signal from the TMRA0 comparator

Select 8-bit timer mode and set the comparator output from TMRA0 to be the input clock to TMRA1.

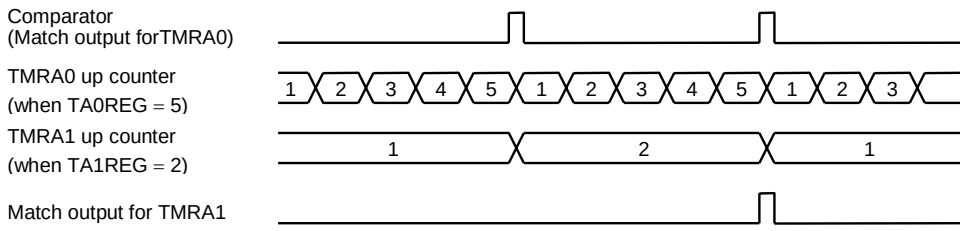

Figure 3.7.11 TMRA1 Count up on Signal from TMRA0

(2) 16-bit timer mode

A 16-bit interval timer is configured by pairing the two 8-bit timers TMRA0 and TMRA1.

To make a 16-bit interval timer, in which TMRA0 and TMRA1 are cascaded together, set TA01MOD<TA01M1:0> to 01.

In 16-bit timer mode, the overflow output from TMRA0 is used as the input clock for TMRA1, regardless of the value set in TA01MOD<TA01CLK1:0>. Table 3.7.3 shows the relationship between the timer (Interrupt) cycle and the input clock selection.

To set the timer interrupt interval, set the lower eight bits in timer register TA0REG and the upper eight bits in TA1REG. Be sure to set TA0REG first (As entering data in TA0REG temporarily disables the compare, while entering data in TA1REG starts the compare).

Example: To generate an INTTA1 interrupt every 0.4 s at f_{SYS} = 20 MHz, set the timer registers TA0REG and TA1REG as follows:

If ϕT16 (6.4 μs at 20 MHz) is used as the input clock for counting, set the following value in the registers:

0.4 s ÷ 6.4 μs = 62500 = F424H;

e.g., set TA1REG to F4H and TA0REG to 24H.

The comparator match signal is output from TMRA0 each time the up counter UC0 matches TA0REG, though the up-counter UC0 is not be cleared.

In the case of the TMRA1 comparator, the match detect signal is output on each comparator pulse on which the values in the up counter UC1 and TA1REG match. When the match detect signal is output simultaneously from both the comparator TMRA0 and TMRA1, the up counters UC0 and UC1 are cleared to 0 and the interrupt INTTA1 is generated. Also, if inversion is enabled, the value of the timer flip-flop TA1FF is inverted.

Example: When TA1REG = 04H and TA0REG = 80H

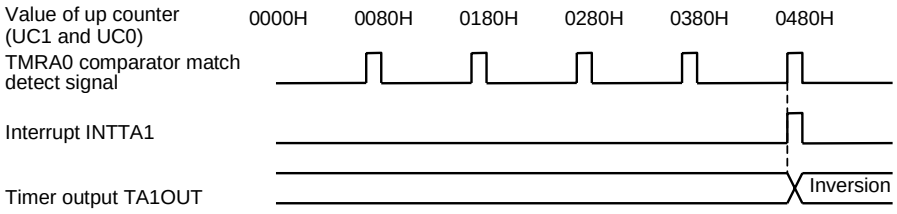

Figure 3.7.12 Timer Output by 16-Bit Timer Mode

(3) 8-bit PPG (Programmable pulse generation) output mode

Square wave pulses can be generated at any frequency and duty ratio by TMRA0. The output pulses may be active-low or active-high. In this mode TMRA1 cannot be used.

TMRA0 outputs pulses on the TA1OUT pin (Shared with PC1).

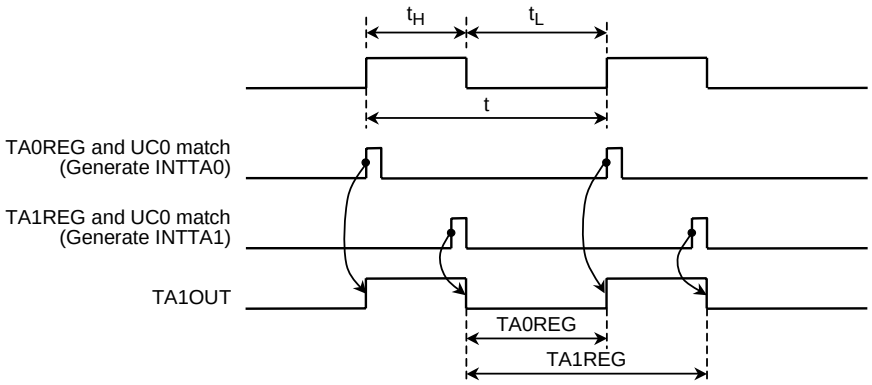

Figure 3.7.13 8-Bit PPG Output Waveforms

In this mode, a programmable square wave is generated by inverting the timer output each time the 8-bit up counter (UC0) matches the value in one of the timer registers TA0REG or TA1REG.

The value set in TA0REG must be smaller than the value set in TA1REG. Although the up counter for TMRA1 (UC1) is not used in this mode, TA01RUN<TA1RUN> should be set to "1", so that UC1 is set for counting.

Figure 3.7.14 shows a block diagram representing this mode.

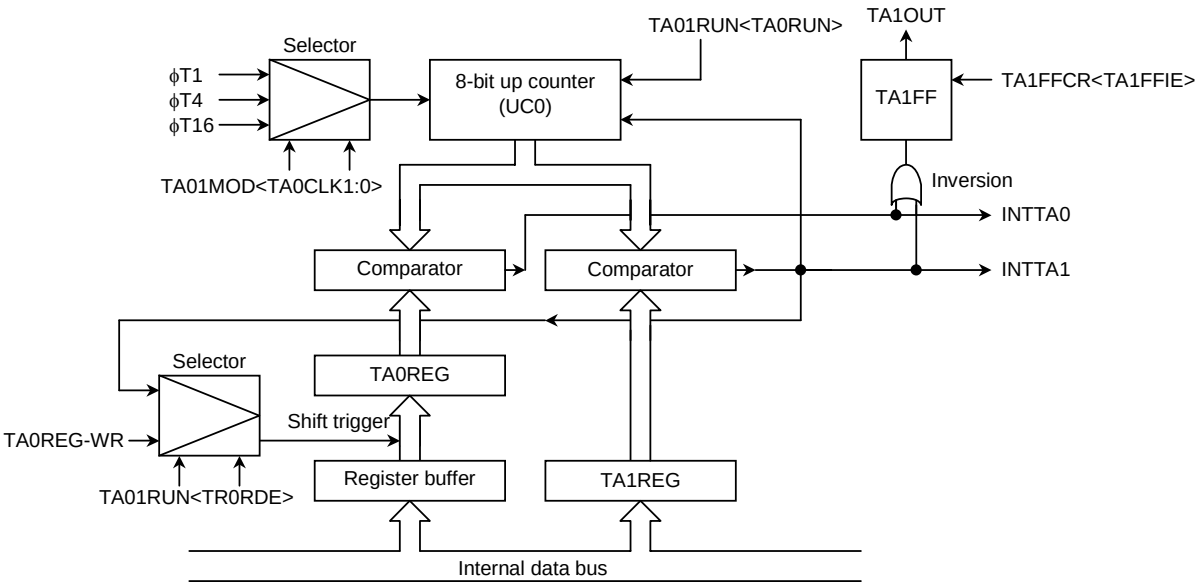

Figure 3.7.14 Block Diagram of 8-Bit PPG Output Mode

If the TA0REG double buffer is enabled in this mode, the value of the register buffer will be shifted into TA0REG each time TA1REG matches UC0.

Use of the double buffer facilitates the handling of low-duty waves (when duty is varied).

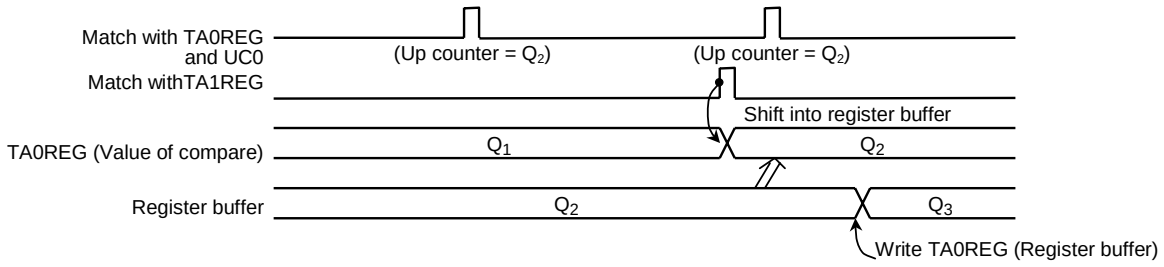

Figure 3.7.15 Operation of Register Buffer

Example: To generate 1/4 duty 62.5 kHz pulses (at f_{SYS} = 20 MHz):

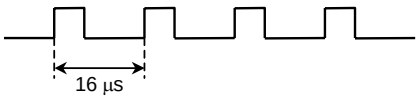

Calculate the value that should be set in the timer register.

To obtain a frequency of 62.5 kHz, the pulse cycle t should be: t = 1/62.5 kHz = 16 μs

ϕT1 = 0.4 μs (at 20 MHz);

16 μs/0.4 μs = 40

Therefore set TA1REG to 40 (28H)

The duty is to be set to 1/4: t × 1/4 = 16 μs × 1/4 = 4 μs

4 μs/0.4 μs = 10

Therefore, set TA0REG = 10 = 0AH

		7	6	5	4	3	2	1	0	
TA01RUN	←	0	X	X	X	–	0	0	0	Stop TMRA0 and TMRA1 and clear it to “0”.
TA01MOD	←	1	0	X	X	X	X	0	1	Set the 8-bit PPG mode, and select ϕT1 as input clock.
TA0REG	←	0	0	0	0	1	0	1	0	Write 0AH.
TA1REG	←	0	0	1	0	1	0	0	0	Write 28H.
TA1FFCR	←	X	X	X	X	0	1	1	X	Set TA1FF and set inversion to enable. Writing “10” provides negative logic pulse.
PCCR	←	X	–	–	X	–	X	1	–	Set PC1 to TA1OUT pin.
PCFC	←	X	–	–	X	–	X	1	–	
TA01RUN	←	1	X	X	X	–	1	1	1	Start TMRA0 and TMRA1 counting.

X : Don’t care, – : No change

(4) 8-bit PWM (Pulse width modulation) output mode

This mode is only valid for TMRA0. In this mode, a PWM pulse with the maximum resolution of 8 bits can be output.

When TMRA0 is used the PWM pulse is output on the TA1OUT pin (which is also used as PC1). TMRA1 can also be used as an 8-bit timer.

The timer output is inverted when the up counter (UC0) matches the value set in the timer register TA0REG or when 2^n counter overflow occurs (n = 6, 7, or 8 as specified by TA01MOD<PWM01:00>). The up counter UC0 is cleared when 2^n counter overflow occurs.

The following conditions must be satisfied before this PWM mode can be used.

Value set in TA0REG < Value of set for 2^n counter overflow

Value set in TA0REG ≠ 0

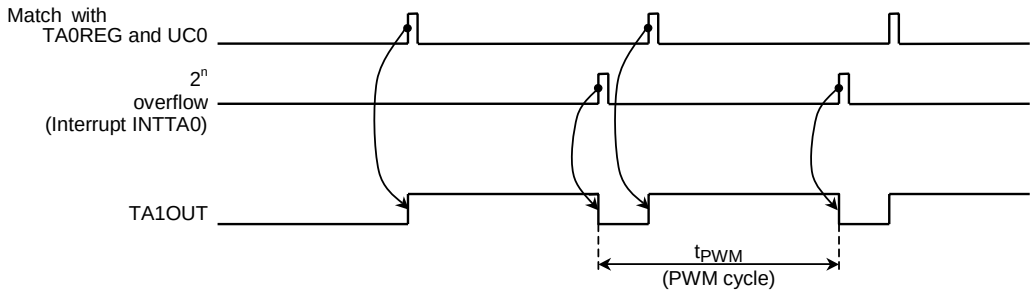

Figure 3.7.16 8-Bit Output Wave Form

Figure 3.7.17 shows a block diagram representing this mode.

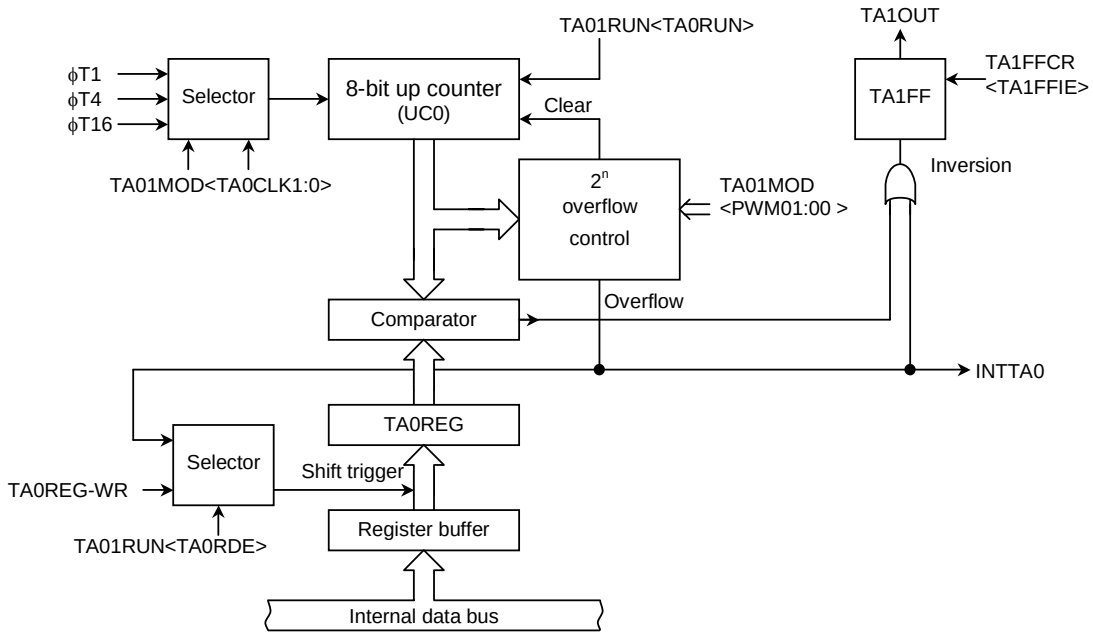

Figure 3.7.17 Block Diagram of 8-Bit PWM Output Mode

In this mode, the value of the register buffer will be shifted into TA0REG if 2^n overflow is detected when the TA0REG double buffer is enabled.

Use of the double buffer facilitates the handling of low duty ratio waves.

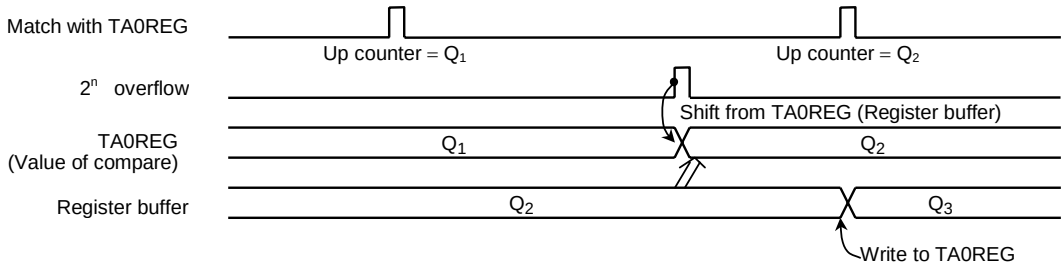

Figure 3.7.18 Operation of Register Buffer

Example: To output the following PWM waves on the TA1OUT pin at f_{SYS} = 20 MHz:

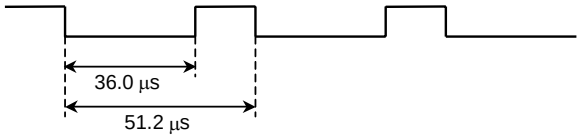

To achieve a 51.2 μs PWM cycle by setting φT1 to 0.4 μs (at f_{SYS} = 20 MHz):

51.2 μs/0.4 μs = 128 = 2^n

Therefore n should be set to 7.

Since the low-level period is 36.0 μs when φT1 = 0.4 μs,

set the following value for TA0REG:

36.0 μs/0.4 μs = 90 = 5AH

		MSB 7	6	5	4	3	2	1	LSB 0	
TA01RUN	←	–	X	X	X	–	–	–	0	Stop TMRA0 and clear it to 0.
TA01MOD	←	1	1	1	0	–	–	0	1	Select 8-bit PWM mode (cycle: 2^7) and select φT1 as the input clock.
TA0REG	←	0	1	0	1	1	0	1	0	Write 5AH.
TA1FFCR	←	X	X	X	X	1	0	1	X	Clear TA1FF to 0; set inversion to enable.
PCCR	←	X	–	–	X	–	X	1	–	Set PC1 to TA1OUT pin.
PCFC	←	X	–	–	X	–	X	1	–	
TA01RUN	←	1	X	X	X	–	1	–	1	Start TMRA0 counting.

X : Don't care, – : No change

Table 3.7.4 Relationship of PWM Cycle and 2^n Counter

2^n Counter	PWM Cycle (at f_{SYS} = 20 MHz)		
	ϕT1	ϕT4	ϕT16
2^6	25.6 μs (39.1 kHz)	102.4 μs (9.77 kHz)	409.6 μs (2.44 kHz)
2^7	51.2 μs (19.5 kHz)	204.8 μs (4.88 kHz)	819.2 μs (1.22 kHz)
2^8	102.4 μs (9.77 kHz)	409.6 μs (2.44 kHz)	1.64 ms (0.61 kHz)

(5) Mode settings

Table 3.7.5 shows the SFR settings for each mode.

Table 3.7.5 Timer Mode Setting Registers

Register Name	TA01MOD				TA1FFCR
<Bit symbol>	<TA01M1:0>	<PWM01:00>	<TA1CLK1:0>	<TA0CLK1:0>	<TA1FFIS>
Function	Timer mode	PWM cycle	Upper timer input clock	Lower timer input clock	Timer F/F inversion select
8-bit timer × 2 channels	00	–	Lower timer match, ϕT1, ϕT16, ϕT256 (00, 01, 10, 11)	External ϕT1, ϕT4, ϕT16 (00, 01, 10, 11)	0: Lower timer output 1: Upper timer output
16-bit timer mode	01	–	–	External ϕT1, ϕT4, ϕT16 (00, 01, 10, 11)	–
8-bit PPG × 1 channel	10	–	–	External ϕT1, ϕT4, ϕT16 (00, 01, 10, 11)	–
8-bit PWM × 1 channel	11	2^6, 2^7, 2^8 (01, 10, 11)	–	External ϕT1, ϕT4, ϕT16 (00, 01, 10, 11)	–
8-bit timer × 1 channel	11	–	ϕT1, ϕT16, ϕT256 (01, 10, 11)	–	Output disable

– : Don't care

3.8 16-Bit Timer/Event Counters (TMRB)

The TMP92CM22 contains 2 channels 16-bit timer/event counter (TMRB) which have the following operation modes:

- 16-bit interval timer mode
- 16-bit event counter mode
- 16-bit programmable square wave pulse generation output mode (PPG: Variable duty cycle with variable period)

Can be used following operation modes by capture function:

- Frequency measurement mode
- Pulse width measurement mode
- Time differential measurement mode

Figure 3.8.1 to Figure 3.8.2 show block diagram of TMRB0 and TMRB1. Each timer/event counter consists of a 16-bit up counter, two 16-bit timer registers (One of them with a double-buffer structure), two 16-bit capture registers, two comparators, a capture input controller, a timer flip-flop and a control circuit.

Each timer/event counter is controlled by 11-byte control register (SFR).

This chapter consists of the following items:

3.8.1 Block diagram
3.8.2 Operation
3.8.3 SFRs
3.8.4 Operation in Each Mode
(1) 16-bit interval timer mode
(2) 16-bit event/counter mode
(3) 16-bit programmable pulse generation (PPG) output mode
(4) Capture function examples

Table 3.8.1 Pins and SFR of TMRB

Spec \ Channel		TMRB0	TMRB1
External pin	External clock/ Caputre triggr input pin	None	TB1IN0 (Share with PD0) TB1IN1 (Share with PD1)
	Timer flip-flop output pin	TB0OUT0 (Share with PC6)	TB1OUT0 (Share with PD2) TB1OUT1 (Share with PD3)
SFR (Address)	Timre run register	TB0RUN (1180H)	TB1RUN (1190H)
	Timrer mode register	TB0MOD (1182H)	TB1MOD (1192H)
	Timre flip-flop control register	TB0FFCR (1183H)	TB1FFCR (1193H)
	Timer register	TB0RG0L (1188H)	TB1RG0L (1198H)
		TB0RG0H (1189H)	TB1RG0H (1199H)
		TB0RG1L (118AH)	TB1RG1L (119AH)
		TB0RG1H (118BH)	TB1RG1H (119BH)
	Capture register	TB0CP0L (118CH)	TB1CP0L (119CH)
		TB0CP0H (118DH)	TB1CP0H (119DH)
		TB0CP1L (118EH)	TB1CP1L (119EH)
		TB0CP1H (118FH)	TB1CP1H (119FH)

3.8.1 Block Diagram

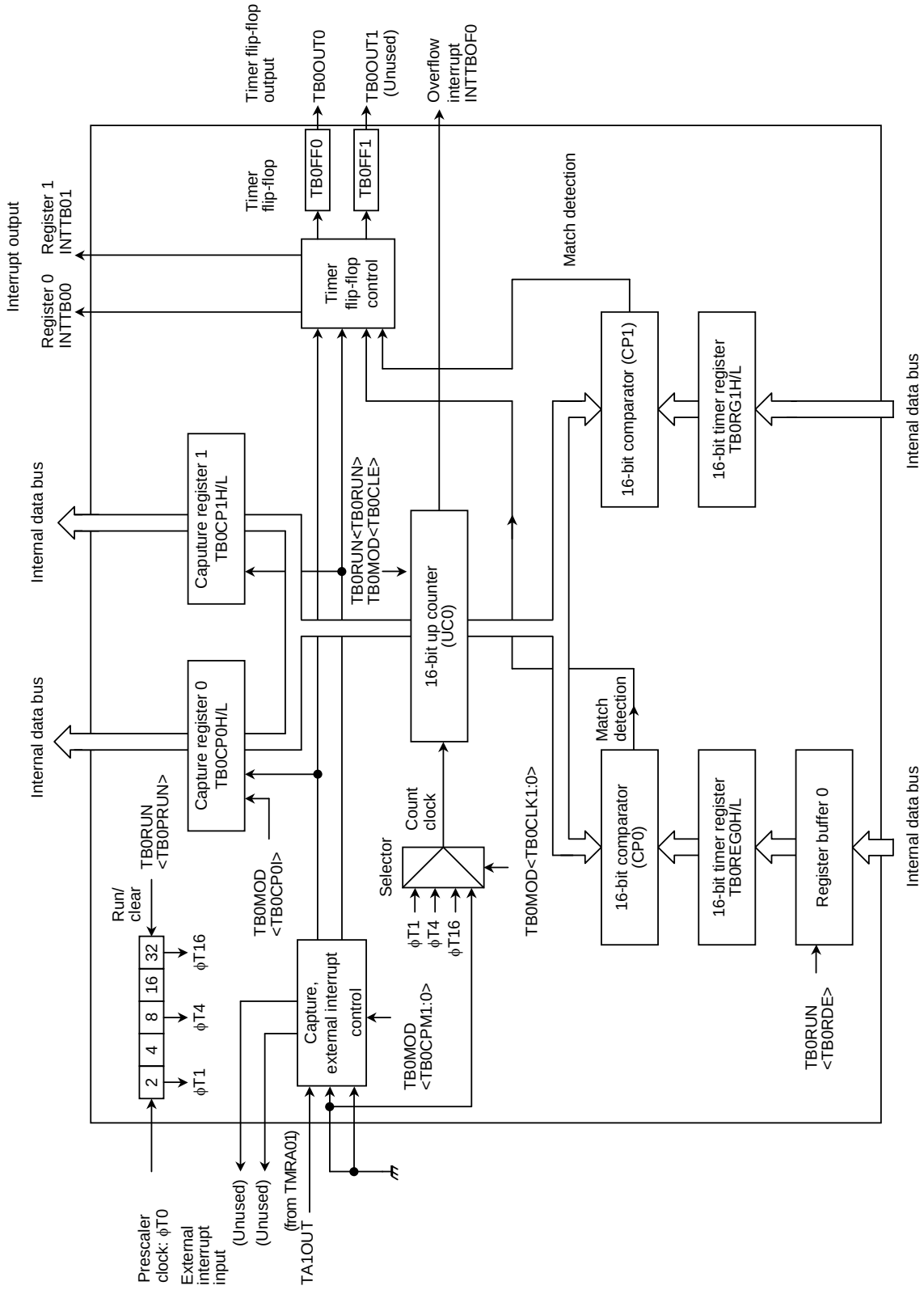

Figure 3.8.1 Block Diagram of TMRB0

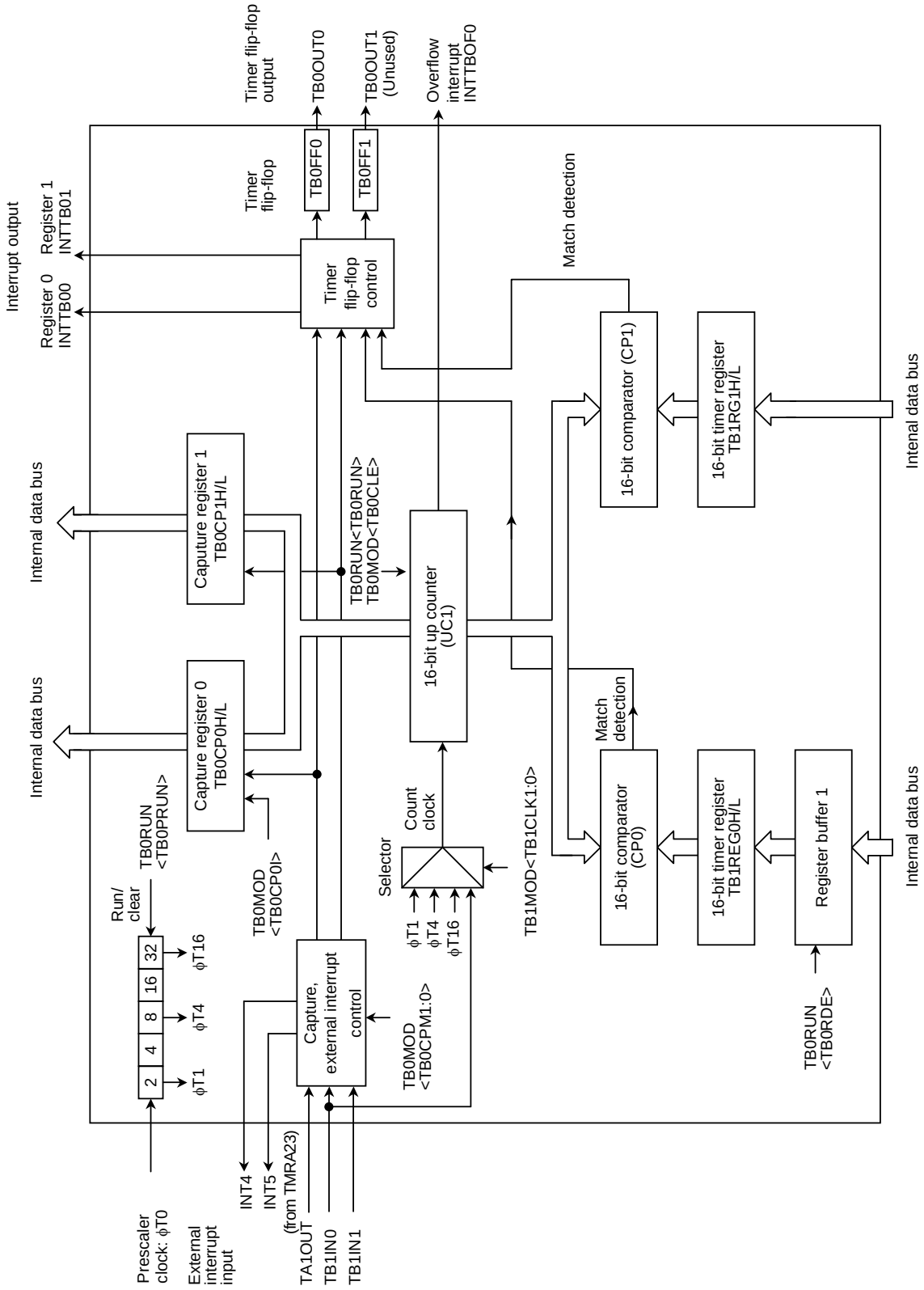

Figure 3.8.2 Block Diagram of TMRB1

3.8.2 Operation

(1) Prescaler

The 5-bit prescaler generates the source clock for TMRB0. The prescaler clock (ϕT0) is divided clock (Divided by 8) from selected clock by the register SYSCR0<PRCK1:0> of clock gear.

This prescaler can be started or stopped using TB0RUN<TB0PRUN>. Counting starts when <TB0PRUN> is set to 1; the prescaler is cleared to zero and stops operation when <TB0PRUN> is cleared to 0.

Table 3.8.2 show prescaler output clock resolution.

Table 3.8.2 Prescaler Output Clock Resolution

at f_{SYS} = 20 MHz

Gear Value <GEAR2:0>	Cycle		
	ϕT1	ϕT4	ϕT16
000 (f_{SYS})	$f_{SYS}/2^3$ (0.4 μs)	$f_{SYS}/2^5$ (1.6 μs)	$f_{SYS}/2^7$ (6.4 μs)
001 ($f_{SYS/2}$)	$f_{SYS}/2^4$ (0.8 μs)	$f_{SYS}/2^6$ (3.2 μs)	$f_{SYS}/2^8$ (12.8 μs)
010 ($f_{SYS/4}$)	$f_{SYS}/2^5$ (1.6 μs)	$f_{SYS}/2^7$ (6.4 μs)	$f_{SYS}/2^9$ (25.6 μs)
011 ($f_{SYS/8}$)	$f_{SYS}/2^6$ (3.2 μs)	$f_{SYS}/2^8$ (12.8 μs)	$f_{SYS}/2^{10}$ (51.2 μs)
100 ($f_{SYS/16}$)	$f_{SYS}/2^7$ (6.4 μs)	$f_{SYS}/2^9$ (25.6 μs)	$f_{SYS}/2^{11}$ (102.4 μs)

(2) Up counter (UC0)

UC0 is a 16-bit binary counter that counts up according to input from the clock specified by TB0MOD<TB0CLK1:0> register.

As the input clock, one of the prescaler internal clocks ϕT1, ϕT4, and ϕT16 can be selected. Counting or stopping and clearing of the counter is controlled by timer operation control register TB0RUN<TB0RUN>. And an external clock from TB1IN0 pin can be seleced in TB1MOD.

When clearing is enabled, the up counter UC0 will be cleared to zero each time its value matches the value in the timer register TB0RG1H/L. Clearing can be enabled or disabled using TB0MOD<TB0CLE>.

If clearing is disabled, the counter operates as a free-running counter.

A timer overflow interrupt (INTTBOF0) is generated when UC0 overflow occurs.

(3) Timer registers (TB0RG0H/L and TB0RG1H/L)

These two 16-bit registers are used to set the interval time. When the value in the up counter UC0 matches the value set in this timer register, the comparator match detect signal will go active.

Setting data for both upper and lower timer registers TB0RG0H/L and TB0RG1H/L is always needed. For example, either using 2-byte data transfer instruction or using 1-byte data transfer instruction twice for lower 8 bits and upper 8 bits in order.

The TB0RG0 timer register has a double-buffer structure, which is paired with register buffer 0. The value set in TB0RUN<TB0RDE> determines whether the double-buffer structure is enabled or disabled: It is disabled when <TB0RDE> = 0, and enabled when <TB0RDE> = 1.

When the double buffer is enabled, data is transferred from the register buffer to the timer register when the values in the up counter (UC0) and the timer register TB0RG1 match.

After a reset, TB0RG0 and TB0RG1 are undefined. If the 16-bit timer is to be used after a reset, data should be written to it beforehand.

On a reset <TB0RDE> is initialized to 0, disabling the double buffer. To use the double buffer, write data to the timer register, set <TB0RDE> to 1, then write data to the register buffer as shown below.

TB0RG0 and the register buffer both have the same memory addresses (001188H and 001189H) allocated to them. If <TB0RDE> = 0, the value is written to both the timer register and the register buffer. If <TB0RDE> = 1, the value is written to the register buffer only.

The addresses of the timer registers are as follows:

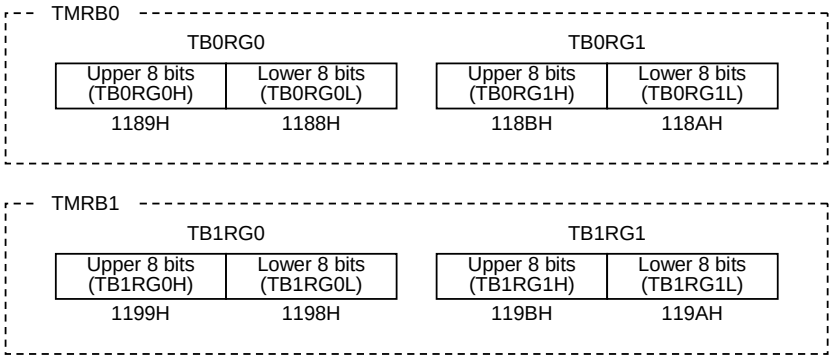

The timer registers are write-only registers and thus cannot be read.

(4) Capture registers (TB0CP0H/L, TB0CP1H/L, TB1CP0H/L, TB1CP1H/L)

These 16-bit registers are used to latch the values in the up counters UC0.

Data in the capture registers should be read both upper and lower all 16 bits. For example, using 2-byte data transfer instruction or using 1-byte data transfer instruction twice for lower 8 bits and upper 8 bits in order.

The addresses of the capture registers are as follows:

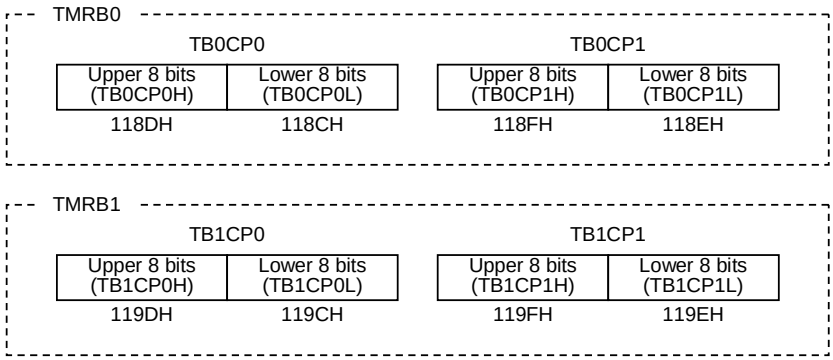

The capture registers are read-only registers and thus cannot be written.

(5) Capture and external interrupt control

This circuit controls the timing to latch the value of up counter UC0 into TB0CP0, TB0CP1 and generating for external interrupt.

Interrupt timing of capture register and selection edge of external interrupt are set by TB0MOD<TB0CPM1:0>. (TMRB0 does not include the selection edge of external interrupt.) External interrupt INT5 is fixed to rising edge.

The value in the up counter (UC0) can be loaded into a capture register by software. Whenever 0 is programmed to TB0MOD<TB0CP0I>, the current value in the up counter is loaded into capture register TB0CP0. It is necessary to keep the prescaler in Run mode (e.g., TB0RUN<TB0PRUN> must be held at a value of 1).

(6) Comparators (CP0 and CP1)

CP0 and CP1 are 16-bit comparators which compare the value in the up counter UC0 with the value set in TB0RG0 or TB0RG1 respectively, in order to detect a match. If a match is detected, the comparator generates an interrupt (INTTB00 or INTTB01 respectively).

(7) Timer flip-flop (TB0FF0 and TB0FF1)

These flip-flops (TB0FF0 and TB0FF1) are inverted by the match detect signals from the comparators and the latch signals to the capture registers. Inversion can be enabled and disabled for each element using TB0FFCR<TB0C0T1, TB0E1T1, TB0E0T1>.

After a reset the values of TB0FF0 and TB0FF1 are undefined. If "00" is programmed to TB0FFCR<TB0FF0C1:0> or <TB0FF1C1:0>, TB0FF0 will be inverted. If "01" is programmed to the capture registers, the value of TB0FF0 will be set to "1". If "10" is programmed to the capture registers, the value of TB0FF0 will be cleared to "0".

The values of TB0FF0 can be output via the timer output pins TB0OUT0 (which is shared with PC6). Timer output should be specified using the port C function register.

3.8.3 SFRs

TMRB0 Run Register

TB0RUN (1180H)

	7	6	5	4	3	2	1	0
Bit symbol	TB0RDE	–			I2TB0	TB0PRUN		TB0RUN
Read/Write	R/W	R/W			R/W	R/W		R/W
After reset	0	0			0	0		0
Function	Double buffer 0: Disable 1: Enable	Always write “0”.			IDLE2 0: Stop 1: Operate	16-bit timer run/stop control 0: Stop and clear 1: Run (Count)		

Count operation

0	Stop and clear
1	Count

I2TB0: Operation in IDLE2 mode
TB0PRUN: Run of prescaler
TB0RUN: Run of TMRB0

Note: The values of bits 1, 4, and 5 of TB0RUN are undefined when read.

TMRB1 Run Register

TB1RUN (1190H)

	7	6	5	4	3	2	1	0
Bit symbol	TB1RDE	–			I2TB1	TB1PRUN		TB1RUN
Read/Write	R/W	R/W			R/W	R/W		R/W
After reset	0	0			0	0		0
Function	Double buffer 0: Disable 1: Enable	Always write “0”.			IDLE2 0: Stop 1: Operate	16-bit timer run/stop control 0: Stop and clear 1: Run (Count)		

Count operation

0	Stop and clear
1	Count

I2TB1: Operation of IDLE2 mode
TB1PRUN: Run of prescaler
TB1RUN: Run of TMRB1

Note: The values of bits 1, 4, and 5 of TB1RUN are undefined when read.

Figure 3.8.3 Register for TMRB

TMRB0 Mode Register

TB0MOD (1182H)

Read-modify-write instruction is prohibited

	7	6	5	4	3	2	1	0
Bit symbol	–	–	TB0CP0I	TB0CPM1	TB0CPM0	TB0CLE	TB0CLK1	TB0CLK0
Read/Write	R/W	R/W	W	R/W				
After reset	0	0	1	0	0	0	0	0
Function	Always write “0”.	Always write “0”.	Software capture control 0: Software capturer 1: Undefined	Capture timing 00: Disable 01: (Reserved) 10: (Reserved) 11: TA1OUT↑ TA1OUT↓		Up counter control 0: Clear disable 1: Clear enable	TMRB0 source clock 00: (Reserved) 01: ϕT1 10: ϕT4 11: ϕT16	

Input clock

00	Reserved
01	ϕT1
10	ϕT4
11	ϕT16

Clear up counter 0(UC0)

0	Clear disable
1	Clear by matching with TB0RG1

Capture/interrupt timing

	Capture control
00	Disable
01	(Reserved)
10	(Reserved)
11	CAP0 by TA1TRG rising CAP1 by TA1TRG falling

Software capture

0	Capture value of up counter to TB0CP0
1	Undefined

Figure 3.8.4 Register for TMRB

TMRB1 Mode Register

TB1MOD (1192H)

Read-modify-write instruction is prohibited

	7	6	5	4	3	2	1	0
Bit symbol	TB1CT1	TB1ET1	TB1CP0I	TB1CPM1	TB1CPM0	TB1CLE	TB1CLK1	TB1CLK0
Read/Write	R/W		W	R/W				
After reset	0	0	1	0	0	0	0	0
Function	TB1FF1 Inversion trigger 0: Trigger disable 1: Trigger enable		Software capture control 0: Software capture 1:Undefined	Capture timing 00: Disable INT4 is rising edge 01: TB1N0 ↑ TB1IN1 ↑ INT4 is falling edge 10: TB1IN0 ↑ TB1IN0 ↓ INT4 is falling edge 11: TA1TRG ↑ TA1TRG ↓ INT4 is rising edge		Up counter control 0:Clear disable 1:Clear enable	TMRB1 source clock 00: TB1IN0 pin input 01: φT1 10: φT4 11: φT16	
	Invert when capture to capture register 1	Invert when match UC0 with TB1RG1						

Input clock

00	Reserved
01	φT1
10	φT4
11	φT16

Clear up counter (UC0)

0	Clear disable
1	Clear by matching with TB1RG1

Capture/interrupt timing

	Capture control	INT4 control
00	Capture disable	Generate INT4 by TB1IN0 rising
01	CAP0 by TB1IN0 rising CAP1 by TB1IN1 rising	
10	CAP0 by TB1IN0 rising CAP1 by TB1IN0 falling	Generate INT4 by TB1IN0 falling
11	CAP0 by TA1TRG rising CAP1 by TA1TRG falling	Generate INT4 by TB1IN0 rising

Software capture

0	Capture value of up counter to TB1CP0
1	Undefined

Figure 3.8.5 Register for TMRB

TMRB0 Flip-flop Control Register

TB0FFCR (1183H)

Read-modify-write instruction is prohibited

	7	6	5	4	3	2	1	0
Bit symbol	–	–	TB0C1T1	TB0C0T1	TB0E1T1	TB0E0T1	TB0FFC1	TB0FFC0
Read/Write	W		R/W				W*	
After reset	1	1	0	0	0	0	1	1
Function	Always write “11”.		TB0FF0 inversion trigger 0: Trigger disable 1: Trigger enable				TB0FF0 control 00: Invert 01: Set 10: Clear 11: Don’t care * Always read as “11”.	
			Invert when the UC value is loaded in to TB0CP1.	Invert when the UC value is loaded in to TB0CP0.	Invert when the UC matches with TB0RG1.	Invert when the UC match with TB0RG0.		

Timer flip-flop TB0 (TB0FF0) control

00	Invert
01	Set to “1”.
10	Set to “0”.
11	Don’t care.

Inversion trigger of TB0FF0 when the UC match with TB0RG0

0	Trigger disable (Disable inversion)
1	Trigger enable (Enable inversion)

Inversion trigger of TB0FF0 when the UC match with TB0RG1

0	Trigger disable (Disable inversion)
1	Trigger enable (Enable inversion)

Inversion trigger of TB0FF0 when the UC value is loaded in to TB0CP0

0	Trigger disable (Disable inversion)
1	Trigger enable (Enable inversion)

Inversion trigger of TB0FF0 when the UC value is loaded in to TB0CP1

0	Trigger disable (Disable inversion)
1	Trigger enable (Enable inversion)

Figure 3.8.6 Register for TMRB

TMRB1 Flip-flop Control Register

TB1FFCR (1193H)

Read-modify-write instruction is prohibited

	7	6	5	4	3	2	1	0
Bit symbol	TB1FF1C1	TB1FF1C0	TB1C1T1	TB1C0T1	TB1E1T1	TB1E0T1	TB1FFC1	TB1FFC0
Read/Write	W*		R/W				W*	
After reset	1	1	0	0	0	0	1	1
Function	TB1FF1 control 00: Invert 01: Set 10: Clear 11: Don't care * Always read as "11".		TB1FF0 inversion trigger 0: Trigger disable 1: Trigger enable				TB1FF0 control 00: Invert 01: Set 10: Clear 11: Don't care * Always read as "11".	
			Invert when the UC value is loaded in to TB1CP1.	Invert when the UC value is loaded in to TB1CP0.	Invert when the UC matches with TB1RG1.	Invert when the UC match with TB1RG0.		

Timer flip-flop TB1 (TB1FF0) control

00	Invert
01	Set to "1".
10	Set to "0".
11	Don't care

Inversion trigger of TB1FF0 when the UC match with TB1RG0

0	Trigger disable (Disable inversion)
1	Trigger enable (Enable inversion)

Inversion trigger of TB1FF0 when the UC match with TB1RG1

0	Trigger disable (Disable inversion)
1	Trigger enable (Enable inversion)

Inversion trigger of TB1FF0 When the UC value is loaded in to TB1CP0

0	Trigger disable (Disable inversion)
1	Trigger enable (Enable inversion)

Inversion trigger of TB1FF0 When the UC value is loaded in to TB1CP1

0	Trigger disable (Disable inversion)
1	Trigger enable (Enable inversion)

TB1FF1 control

00	Invert value of TB1FF1
01	Set TB1FF1 to "1".
10	Set TB1FF1 to "0".
11	Don't care

Figure 3.8.7 Register for TMRB

3.8.4 Operation in Each Mode

(1) 16-bit interval timer mode

Generating interrupts at fixed intervals in this example, the interval time is set the timer register TB0RG1 to generate the interrupt INTTB01.

		7	6	5	4	3	2	1	0	
TB0RUN	←	0	0	X	X	–	0	X	0	Stop TMRB0.
INTETB0	←	X	1	0	0	X	0	0	0	Enable INTTB01 and set interrupt level 4. Disable INTTB00.
TB0FFCR	←	1	1	0	0	0	0	1	1	Disable the trigger.
TB0MOD	←	0	0	1	0	0	1	*	*	Set input clock to prescaler clock, and set capture function to disable. (** = 01, 10, 11)
TB0RG1	←	*	*	*	*	*	*	*	*	Set the interval time (16 bits).
		*	*	*	*	*	*	*	*	
TB0RUN	←	0	0	X	X	–	1	X	1	Start TMRB0.

X : Don't care, – : No change

(2) 16-bit event counter mode

In 16-bit timer mode as described in above, the timer can be used as an event counter by selecting the external clock (TB1IN0 pin input) as the input clock.

Up counter counting up by rising edge of TB1IN0 pin input. And execution software capture and reading capture value enable reading count value.

		7	6	5	4	3	2	1	0	
TB1RUN	←	0	0	X	X	–	0	X	0	Stop TMRB1.
PDCR	←	X	X	X	X	–	–	–	0	Set PD0 to TB1IN0 input mode.
PDFC	←	X	X	X	X	–	–	–	1	
INTETB1	←	X	1	0	0	X	0	0	0	Set INTTB11 to enable (Interrupt level4). Set INTTB00 to disable.
TB1FFCR	←	1	1	0	0	0	0	1	1	Set trigger to disable.
TB1MOD	←	0	0	1	0	0	1	0	0	Set input clock to TB1IN0 pin input.
TB1RG1	←	*	*	*	*	*	*	*	*	Set number of count. (16 bits)
TB1RUN	←	0	0	X	X	–	1	X	1	Start TMRB1.

X: Don't care, –: No change

Note: When used as an event counter, set the prescaler to "RUN" (TB1RUN<TB1PRUN> = "1").

(3) 16-bit programmable pulse generation (PPG) output mode

Square wave pulses can be generated at any frequency and duty ratio. The output pulse may be either low active or high active.

The PPG mode is obtained by inversion of the timer flip-flop TB0FF0 that is to be enabled by the match of the up counter UC0 with timer register TB0RG0 or TB0RG1 and to be output to TB0OUT0. In this mode, the following conditions must be satisfied.

(Set value of TB0RG0) < (Set value of TB0RG1)

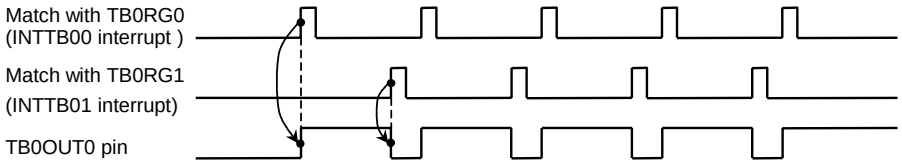

Figure 3.8.8 Programmable Pulse Generation (PPG) Output Waveforms

When the TB0RG0 double buffer is enabled in this mode, the value of register buffer 0 will be shifted into TB0RG0 at match with TB0RG1. This feature makes easy the handling of low-duty waves.

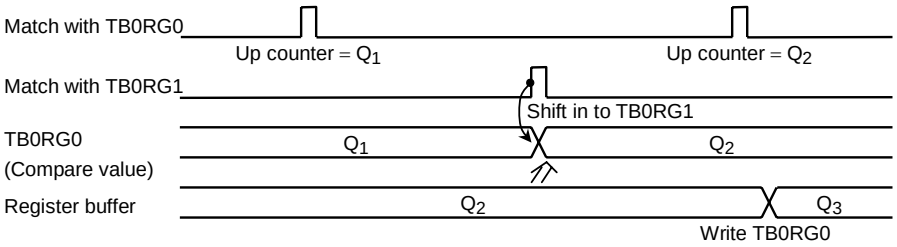

Figure 3.8.9 Operation of Register Buffer

The following block diagram illustrates this mode.

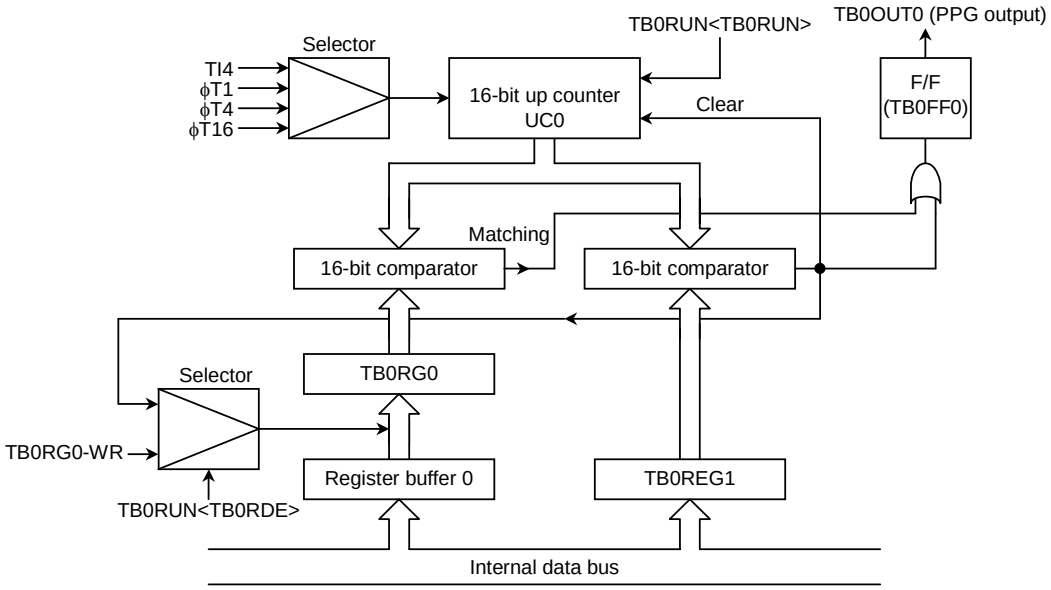

Figure 3.8.10 Block Diagram of 16-Bit PPG Mode

The following example shows how to set 16-bit PPG output mode:

		7	6	5	4	3	2	1	0	
TB0RUN	←	0	0	X	X	–	0	X	0	Disable the TB0RG0 double buffer and stop TMRB0.
TB0RG0	←	*	*	*	*	*	*	*	*	Set the duty ratio (16 bits).
		*	*	*	*	*	*	*	*	
TB0RG1	←	*	*	*	*	*	*	*	*	Set the frequency (16 bits).
		*	*	*	*	*	*	*	*	
TB0RUN	←	1	0	X	X	–	0	X	0	Enable the TB0RG0 double buffer. (The duty and frequency are changed on an INTTB01 interrupt.)
TB0FFCR	←	X	X	0	0	1	1	1	0	Set the mode to invert TB0FF0 at the match with TB0RG0/TB0RG1. Clear TB0FF0 to 0.
TB0MOD	←	0	0	1	0	0	1	*	*	Set input clock to prescaler output clock and disable the capture function.
						(** = 01, 10, 11)				
PCCR	←	X	1	–	X	–	X	–	–	Set PC6 to function as TB0OUT0.
PCFC	←	X	1	–	X	–	X	–	–	
TB0RUN	←	1	0	X	X	–	1	X	1	Start TMRB0.

X : Don't care, – : No change

(4) Capture function examples

Used capture function, they can be applicabled in many ways, for example:

1. One-shot pulse output from external trigger pulse
2. Frequency measurement
3. Pulse width measurement
4. Measurement of difference time

1. One-shot pulse output from external trigger pulse

Set the up counter UC0 in free-running mode with the internal input clock, input the external trigger pulse from TB1IN0 pin, and load the value of up counter into capture register TB1CP0 at the rise edge of external trigger pulse.

When the interrupt INT4 is generated at the rise edge of external trigger pulse, set the TB1CP0 value (c) plus a delay time (d) to TB1RG0 (= c + d), and set the above set value (c + d) plus a one-shot width (p) to TB1RG1 (= c + d + p). And, set "11" to timer flip-flop control register TB1FFCR<TB1E1T1, TB1E0T1>. Set to trigger enable for be inverted timer flip-flop TB1FF0 by UC0 matching with TB1RG0 and with TB1RG1. When interrupt INTTB11 occurs, this inversion will be disabled after one-shot pulse is output.

The (c), (d), and (p) correspond to c, d, and p in Figure 3.8.11.

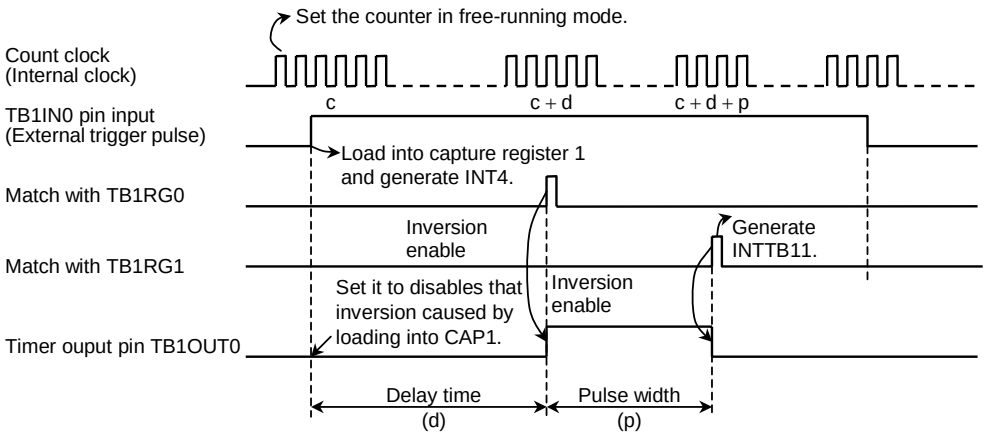

Figure 3.8.11 One-shot Pulse Output (with delay)

Example: To output a 2 [ms] one-shot pulse with a 3 [ms] delay to the external trigger pulse via the TB1IN0 pin.

* Clock state
- System clock: High frequency (fc)
- High speed clock gear: 1 time (fc)
- Prescaler: f_{FPH}

Setting in Main

```
TB1MOD    ← X X 1 0 1 0 0 1
TB1FFCR   ← X X 0 0 0 0 1 0
PDCR      ← X X X X – 1 – –
PDFC      ← X X X X – 1 X X
INTE45    ← X – – – X 1 0 0
INTETB1   ← X 0 0 0 X 0 0 0
TB1RUN    ← – 0 X X – 1 X 1
```

- Set free running.
- Count using ϕT1.
- Load into TB1CP0 by rising edge of TB1IN0 pin input.
- Clear TB1FF0 to 0.
- Disable inversion of TB1FF0.
- Set PD2 to function as the TB1OUT0 pin.
- Enable INT4. Disable INTTB10 and INTTB11.
- Start TMRB0.

Setting in INT4

```
TB1RG0    ← TB1CP0 + 3 ms/φT1
TB1RG1    ← TB1RG0 + 2 ms/φT1
TB1FFCR   ← X X – – 1 1 – –
INTETB1   ← X 1 0 0 X – – –
```

- Enable inversion of TB1FF0 when match with TB1RG0 or TB1RG1.
- Set INTTB11 to enable.

Setting in INTTB11

```
TB1FFCR   ← X X – – 0 0 – –
INTETB1   ← X 0 0 0 X – – –
```

- Disable inversion of TB1FF0 when match with TB1RG0 or TB1RG1.
- Disable INTTB11.

X : Don't care, – : No change

When delay time is unnecessary, invert timer flip-flop TB1FF0 when up counter value is loaded into capture register (TB1CP0), and set the TB1CP0 value (c) plus the one-shot pulse width (p) to TB0RG1 when the interrupt INT4 occurs. The TB1FF0 inversion should be enable when the up counter (UC0) value matches TB1RG1, and disabled when generating the interrupt INTTB11.

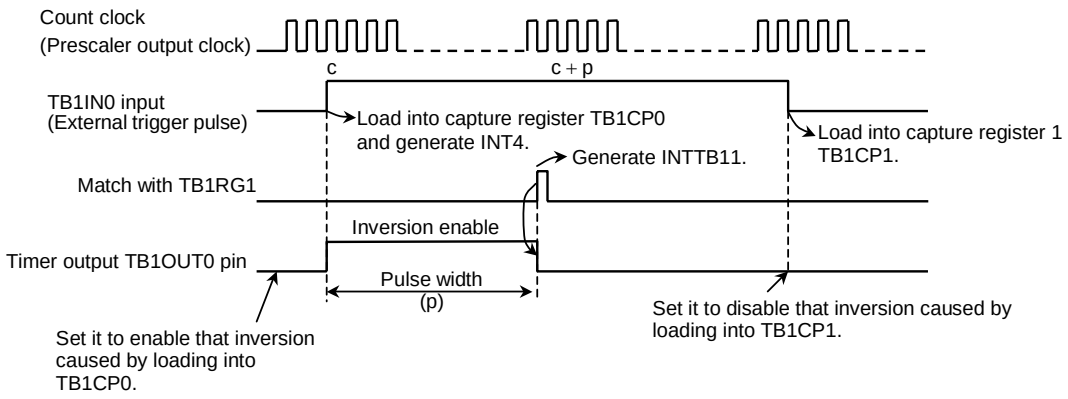

Figure 3.8.12 One-shot Pulse Output of External Trigger Pulse (without delay)

2. Frequency measurement

The frequency of the external clock can be measured in this mode. Frequency is measured by the 8-bit timers TMRA23 and the 16-bit timer/event counter.

TMRA23 is used to setting of measurement time by inversion TA3FF.

Counter clock in TMRB0 select TB1IN0 pin input, and count by external clock input. Set to TB1MOD<TB1CPM1:0> = “11”. The value of the up counter (UC0) is loaded into the capture register TB0CP0 at the rise edge of the timer flip-flop TA1FF of 8-bit timers (TMRA1), and into TB0CP1 at its fall edge.

The frequency is calculated by difference between the loaded values in TB1CP0 and TB1CP1 when the interrupt (INTTA2 or INTTA3) is generates by either 8-bit timer.

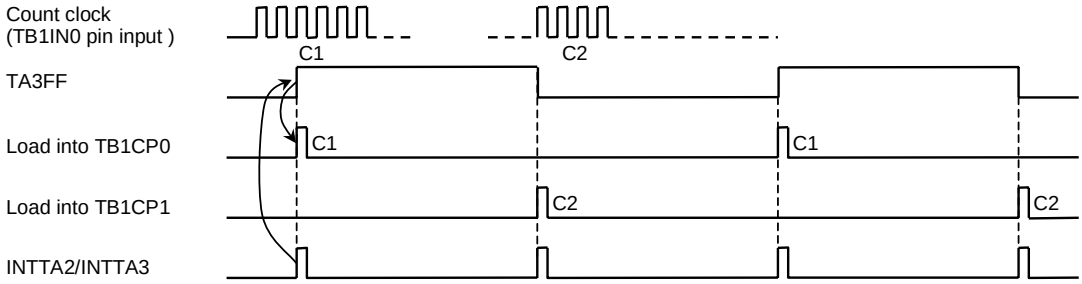

Figure 3.8.13 Frequency Measurement

For example, if the value for the level 1 width of TA3FF of the 8-bit timer is set to 0.5 s and the difference between the values in TB1CP0 and TB1CP1 is 100, the frequency is 100 ÷ 0.5 s = 200 Hz.

3. Pulse width measurement

This mode allows measuring the high level width of an external pulse. While keeping the 16-bit timer/event counter counting (Free running) with the prescaler output clock input, external pulse is input through the TB1IN0 pin. Then the capture function is used to load the UC0 values into TB1CP0 and TB1CP1 at the rising edge and falling edge of the external trigger pulse respectively. The interrupt INT4 occurs at the falling edge of TB1IN0.

The pulse width is obtained from the difference between the values of TB1CP0 and TB1CP1 and the internal clock cycle.

For example, if the prescaler output clock is 0.8 μs and the difference between TB1CP0 and TB1CP1 is 100, the pulse width will be 100 × 0.8 μs = 80 μs.

Additionally, the pulse width that is over the UC0 maximum count time specified by the clock source can be measured by changing software.

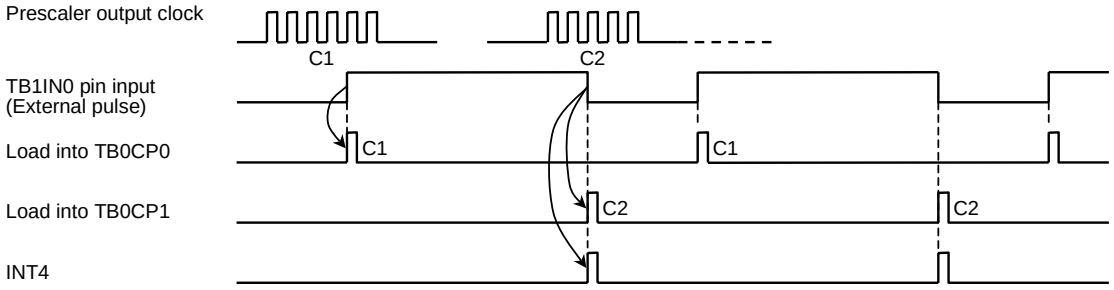

Figure 3.8.14 Pulse Width Measurement

Note: Pulse Width measure by setting “10” to TB1MOD<TB1CPM1:0>. The external interrupt INT4 is generated in timing of falling edge of TB1IN0 input. In other modes, it is generated in timing of rising edge of TB1IN0 input.

The width of low level can be measured from the difference between the first C2 and the second C1 at the second INT4 interrupt.

4. Measurement of difference time

This mode is used to measure the difference in time between the rising edges of external pulses input through TB1IN0 and TB1IN1.

Keep the 16-bit timer/event counter (TMRB1) counting (Free running) with the prescaler output clock, and load the UC0 value into TB1CP0 at the rising edge of the input pulse to TB1IN0. Then the interrupt INT4 is generated.

Similarly, the UC0 value is loaded into TB1CP1 at the rising edge of the input pulse to TB1IN1, generating the interrupt INT5.

The time difference between these pulses can be obtained by multiplying the value subtracted TB1CP0 from TB1CP1 and the internal clock cycle together at which loading the UC0 value into TB1CP0 and TB1CP1 has been done.

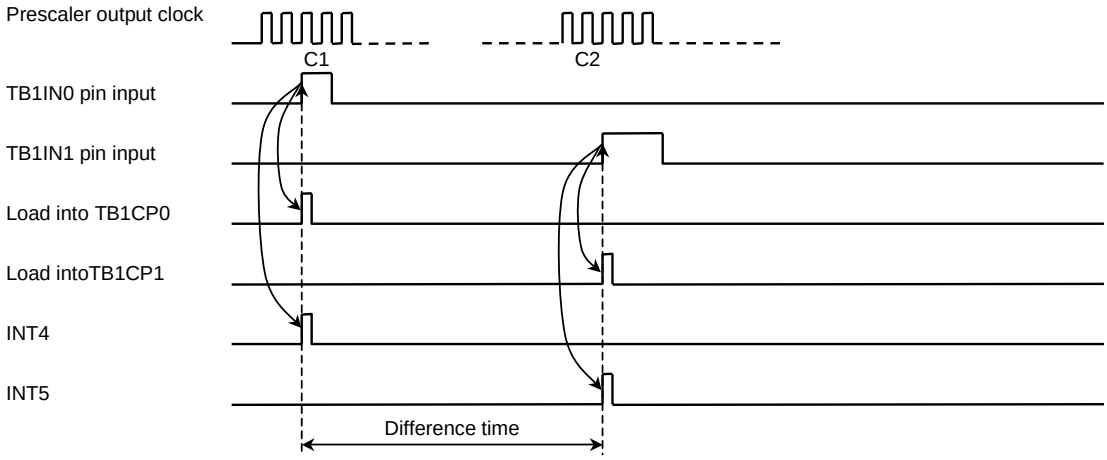

Figure 3.8.15 Measurement of Difference Time

3.9 Serial Channels (SIO)

TMP92CM22 includes 2 serial I/O channels. Each channel is called SIO0 and SIO1. For both channels either UART Mode (Asynchronous transmission) or I/O interface mode (Synchronous transmission) can be selected.

- I/O interface mode — Mode 0: For transmitting and receiving I/O data using the synchronizing signal SCLK for extending I/O.
- UART mode
  - Mode 1: 7-bit data
  - Mode 2: 8-bit data
  - Mode 3: 9-bit data

In mode 1 and mode 2 a parity bit can be added. Mode 3 has a wakeup function for making the master controller start slave controllers via a serial link (Multi-controller system).

Figure 3.9.2 and Figure 3.9.3 are block diagrams for each channel. Each channel is structured in prescaler, serial clock generation circuit, receiving buffer and control circuit, and transfer buffer and control circuit.

Serial channels 0 and 1 can be used independently.

Both channels operate in the same function except for the following points; hence only the operation of channel 0 is explained below.

Table 3.9.1 Differences between Channels 0 to 1

	Channel 0	Channel 1
Pin name	TXD0 (PF0) RXD0 (PF1) $\overline{CTS0}$ /SCLK0 (PF2)	TXD1 (PF3) RXD1 (PF4) $\overline{CTS1}$ /SCLK1 (PF5)
IrDA mode	Yes	No

This chapter contains the following sections:

3.9.1 Block Diagram
3.9.2 Operation of Each Circuit
3.9.3 SFRs
3.9.4 Operation in Each Mode
3.9.5 Support for IrDA Mode

- Mode 0 (I/O interface mode)

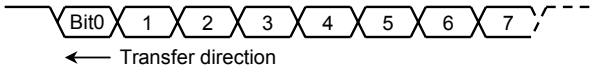

- Mode 1 (7-bit UART mode)

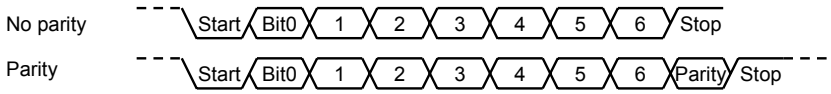

- Mode 2 (8-bit UART mode)

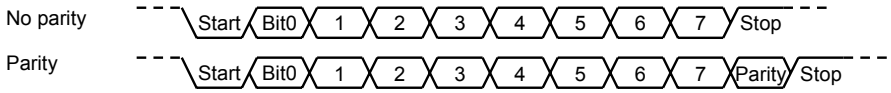

- Mode 3 (9-bit UART mode)

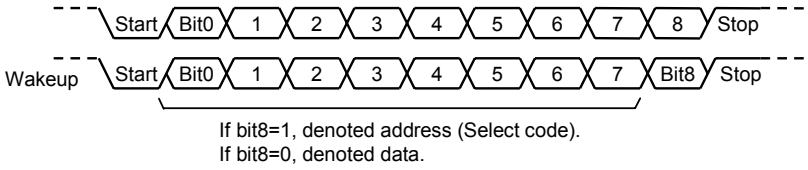

Figure 3.9.1 Data Format

3.9.1 Block Diagram

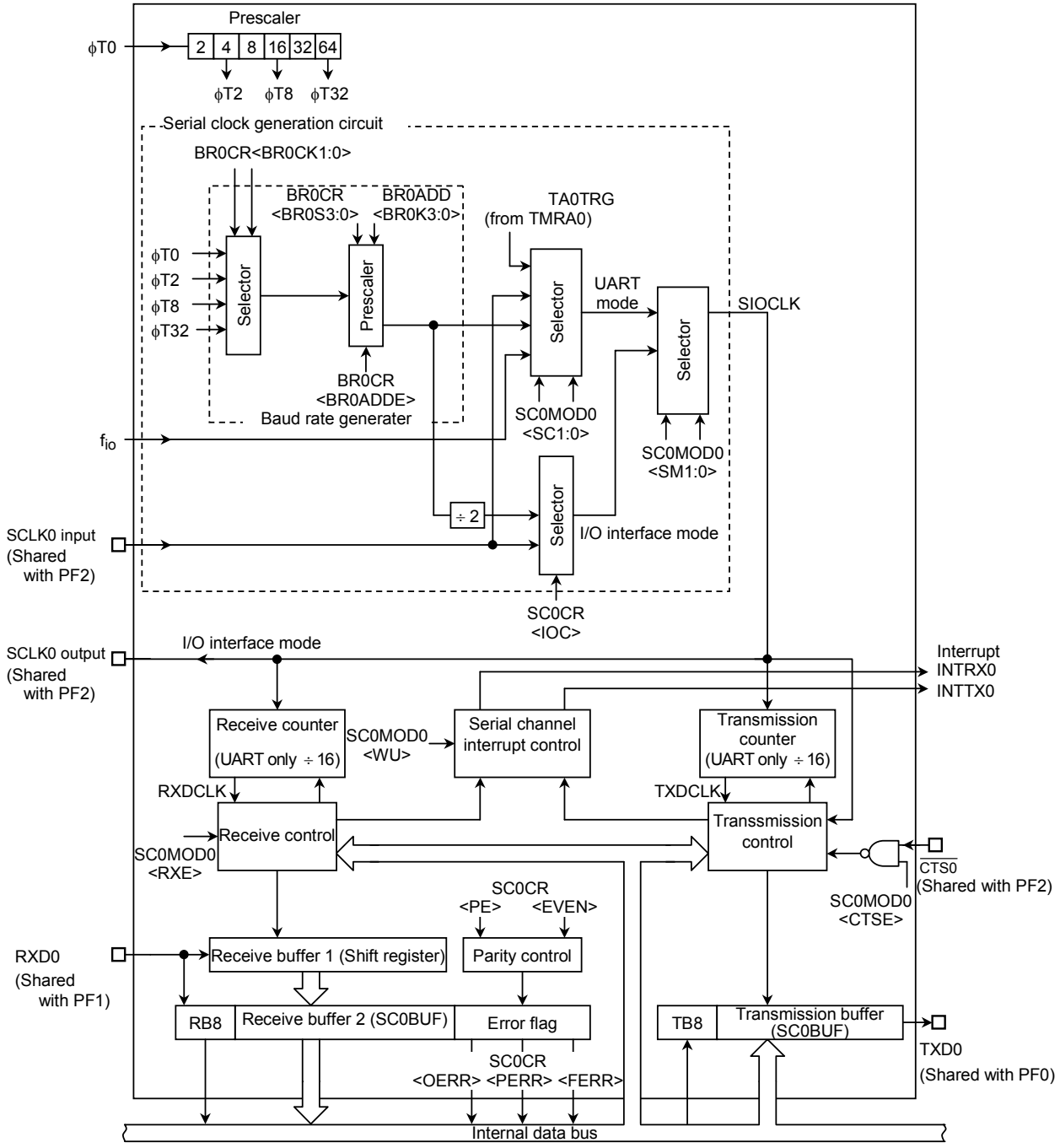

Figure 3.9.2 Block Diagram of SIO0

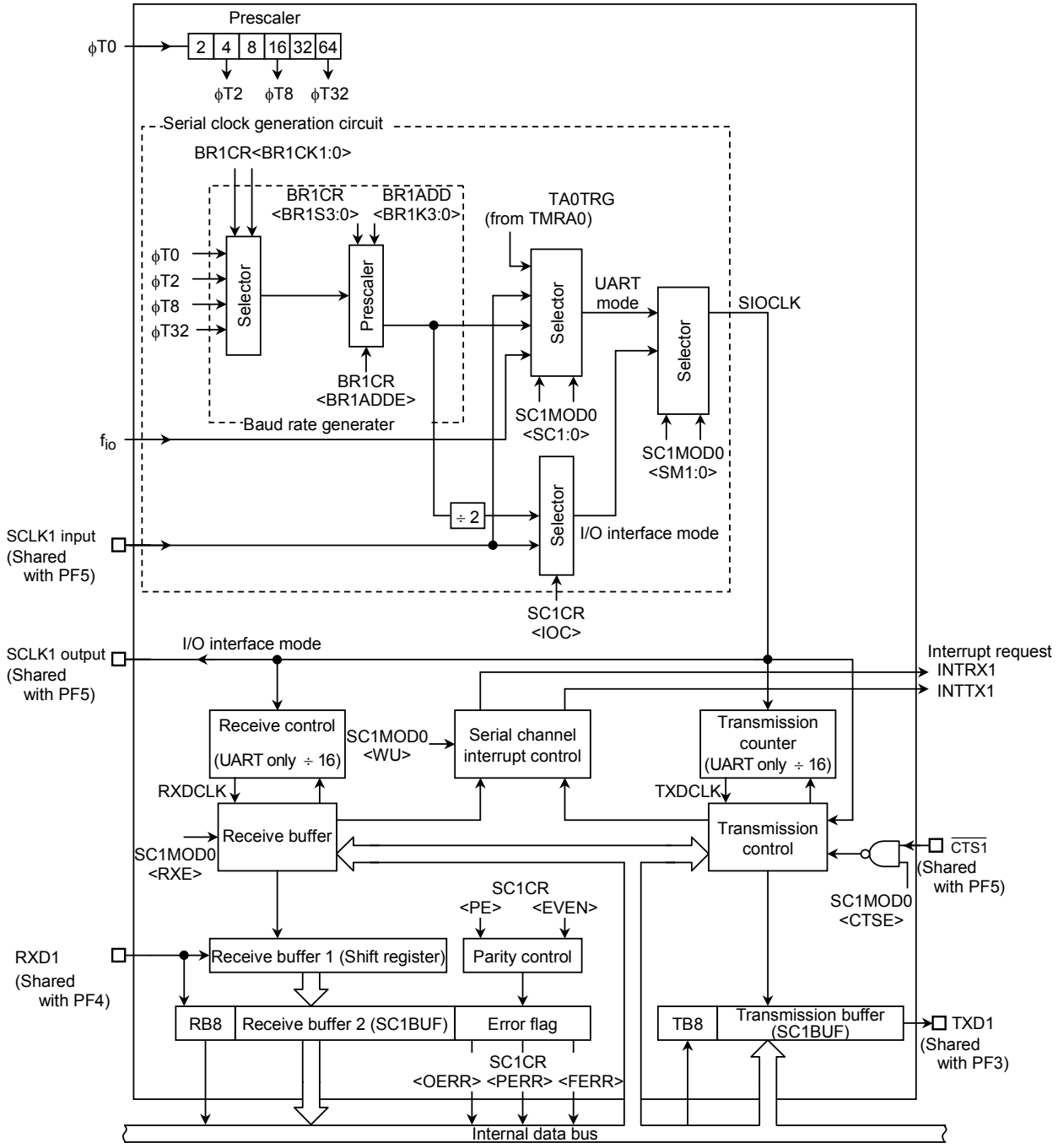

Figure 3.9.3 Block Diagram of SIO1

3.9.2 Operation of Each Circuit

(1) Prescaler

There is a 6-bit prescaler for generating a clock to SIO0. The clock selected using SYSCR1<GEAR2:0> is divided by 8 and input to the prescaler as ϕT0. The prescaler can be run only case of selecting the baud rate generator as the serial transfer clock.

Table 3.9.2 shows prescaler clock resolution into the baud rate generator.

Table 3.9.2 Prescaler Clock Resolution to Baud Rate Generator

Input Clock	Prescaler Input Clock Resolution
ϕT0	2^2/ f_{SYS}
ϕT2	$f2^4$/ f_{SYS}
ϕT8	2^6/ f_{SYS}
ϕT32	2^8/ f_{SYS}

The serial interface baud rate generator selects between 4 clock inputs: ϕT0, ϕT2, ϕT8, and ϕT32 among the prescaler outputs.

(2) Baud rate generator

The baud rate generator is a circuit that generates transmission and receiving clocks that determine the transfer rate of the serial channels.

The input clock to the baud rate generator, ϕT0, ϕT2, ϕT8, or ϕT32, is generated by the 6-bit prescaler which is shared by the timers. One of these input clocks is selected using the BR0CR<BR0CK1:0> field in the baud rate generator control register.

The baud rate generator includes a frequency divider, which divides the frequency by 1 or N + (16 – K)/16 to 16 values, determining the transfer rate.

The transfer rate is determined by the settings of BR0CR<BR0ADDE, BR0S3:0> and BR0ADD<BR0K3:0>.

- In UART mode

(1) When BR0CR<BR0ADDE> = 0

The settings BR0ADD<BR0K3:0> are ignored. The baud rate generator divides the selected prescaler clock by N (N = 1, 2, 3 ... 16), which is set in BR0CR<BR0S3:0>.

(2) When BR0CR<BR0ADDE> = 1

The N + (16 – K)/16 division function is enabled. The baud rate generator divides the selected prescaler clock by N + (16 – K)/16 using the value of N (N = 2, 3 ... 15) set in BR0CR<BR0S3:0> and the value of K (K = 1, 2, 3 ... 15) set in BR0ADD<BR0K3:0>.

Note: If N = 1 and N = 16, the N + (16 – K)/16 division function is disabled.
Clear BR0CR<BR0ADDE> register to "0".

- In I/O interface mode

The N + (16 – K)/16 division function is not available in I/O interface mode. Clear BR0CR<BR0ADDE> to 0 before dividing by N.

The method for calculating the transfer rate when the baud rate generator is used is explained below.

- UART mode

$$\text{Baud rate} = \frac{\text{Input clock of baud rate generator}}{\text{Frequency divider for baud rate generator}} \div 16$$

- I/O interface mode

$$\text{Baud rate} = \frac{\text{Input clock of baud rate generator}}{\text{Frequency divider for baud rate generator}} \div 2$$

- Integer divider (N divider)

  For example, when the f_{SYS} = 12.288 MHz, the input clock frequency = ϕT2, the frequency divider N (BR0CR<BR0S3:0>) = 5, and BR0CR<BR0ADDE> = 0, the baud rate in UART mode is as follows:

  * Clock state

  System clock: High speed (f_{SYS})
  High speed gear: 1 time (f_{SYS})

$$\text{Baud rate} = \frac{f_{SYS}/16}{5} \div 16$$

$$= 12.288 \times 10^6 \div 16 \div 5 \div 16 = 9600 \text{ (bps)}$$

Note: The N + (16 – K)/16 division function is disabled and setting BR0ADD<BR0K3:0> is invalid.

- N + (16 – K)/16 divider (UART mode only)

  Accordingly, when f_{SYS} = 4.8 MHz, the input clock frequency = ϕT0, the frequency divider N (BR0CR<BR0S3:0>) = 7, K (BR0ADD<BR0K3:0>) = 3, and BR0CR<BR0ADDE> = 1, the baud rate is as follows:

  * Clock state

  System clock: High speed (f_{SYS})
  High speed gear: 1 time (f_{SYS})

$$\text{Baud rate} = \frac{f_{SYS}/4}{7 + \frac{(16-3)}{16}} \div 16$$

$$= 4.8 \times 10^6 \div 4 \div (7 + \frac{13}{16}) \div 16 = 9600 \text{ (bps)}$$

Table 3.9.3 and Table 3.9.4 show examples of UART mode transfer rates.

Additionally, the external clock input is available in the serial clock (Serial channels 0 and 1). The method for calculating the baud rate is explained below:

- In UART mode

  Baud rate = External clock input frequency ÷ 16

  It is necessary to satisfy (External clock input cycle) ≥ $4/f_{SYS}$

- In I/O interface mode

  Baud rate = External clock input frequency

  It is necessary to satisfy (External clock input cycle) ≥ $16/f_{SYS}$

Table 3.9.3 UART Baud Rate Selection

(when using baud rate generater and BR0CR<BR0ADDE> = 0)

Unit (kbps)

f_{SYS} [MHz]	Input Clock / Divider N (Set to BR0CR<BR0S3:0>)	ϕT0 ($4/f_{SYS}$)	ϕT2 ($16/f_{SYS}$)	ϕT8 ($64/f_{SYS}$)	ϕT32 ($256/f_{SYS}$)
18.432000	15	19.200	4.800	1.200	0.300
19.660800	8	38.400	9.600	2.400	0.600
↑	16	19.200	4.800	1.200	0.300

Note 1: Transfer rates in I/O interface mode are eight times faster than the values given above.

Note 2: The values in this table are calculated for when f_{SYS} is selected as the system clock, f_{SYS} /1 is selected as the clock gear.

Table 3.9.4 UART Baud Rate Selection

(when using trigger output of TMRA0 and input clcok of TMRA0 is ϕT1.)

Unit (kbps)

TA0REG0 / f_{SYS}	20 MHz	19.6608 MHz	16 MHz
02H		76.8	62.5
04H		38.4	31.25
05H	31.25		
08H		19.2	
10H		9.6	

Method for calculating the transfer rate (when TMRA0 is used):

$$\text{Transfer rate} = \frac{f_{SYS}}{\text{TA0REG} \times 2^{3} \times 16}$$

(When input clock of TMRA0 is ϕT1)

Note 1: The TMRA0 match detect signal cannot be used as the transfer clock in I/O interface mode.

Note 2: The values in this table are calculated for when f_{SYS} is selected as the system clock, f_{SYS}/1 is selected as the clock gear.

(3) Serial clock generation circuit

This circuit generates the basic clock for transmitting and receiving data.

- In I/O interface mode

  In SCLK output mode with the setting SC0CR<IOC> = 0, the basic clock is generated by dividing the output of the baud rate generator by 2, as described previously.

  In SCLK input mode with the setting SC0CR<IOC> = 1, the rising edge or falling edge will be detected according to the setting of the SC0CR<SCLKS> register to generate the basic clock.

- In UART mode

  The SC0MOD0<SC1:0> setting determines whether the baud rate generator clocks, the internal system clock f_{SYS}, the trigger output signal from TMRA0 or the external clock (SCLK0 pin) is used to generate the basic clock SIOCLK.

(4) Receiving counter

The receiving counter is a 4-bit binary counter used in UART mode that counts up the pulses of the SIOCLK clock. It takes 16 SIOCLK pulses to receive 1 bit of data; each data bit is sampled three times – on the 7th, 8th, and 9th clock cycles.

The value of the data bit is determined from these three samples using the majority rule.

For example, if the data bit is sampled respectively as 1, 0, and 1 on 7th, 8th, and 9th clock cycles, the received data bit is taken to be 1. A data bit sampled as 0, 0, and 1 are taken to be 0.

(5) Receiving control

- In I/O interface mode

  In SCLK output mode with the setting SC0CR<IOC> = 0, the RXD0 pin is sampled on the rising or falling edge of the shift clock which is output on the SCLK0 pin according to the SC0CR<SCLKS> setting.

  In SCLK input mode with the setting SC0CR<IOC> = 1, the RXD0 pin is sampled on the rising or falling edge of the SCLK input, according to the SC0CR<SCLKS> setting.

- In UART mode

  The receiving control block has a circuit that detects a start bit using the majority rule. Received bits are sampled three times; when two or more out of three samples are 0, the bit is recognized as the start bit and the receiving operation commences.

  The values of the data bits that are received are also determined using the majority rule.

(6) The receiving buffers

To prevent overrun errors, the receiving buffers are arranged in a double-buffer structure.

Received data is stored one bit at a time in receiving buffer 1 (which is a shift register). When 7 or 8 bits of data have been stored in receiving buffer 1, the stored data is transferred to receiving buffer 2 (SC0BUF); this causes an INTRX0 interrupt to be generated.

The CPU only reads receiving buffer 2 (SC0BUF). Even before the CPU reads receiving buffer 2 (SC0BUF), the received data can be stored in receiving buffer 1.

However, unless receiving buffer 2 (SC0BUF) is read before all bits of the next data are received by receiving buffer 1, an overrun error occurs. If an overrun error occurs, the contents of receiving buffer 1 will be lost, although the contents of receiving buffer 2 and SC0CR<RB8> will be preserved.

SC0CR<RB8> is used to store either the parity bit – added in 8-bit UART mode – or the most significant bit (MSB) – in 9-bit UART mode.

In 9-bit UART mode the wake-up function for the slave controller is enabled by setting SC0MOD0<WU> to 1; in this mode INTRX0 interrupts occur only when the value of SC0CR<RB8> is 1.

(7) Transmission counter

The transmission counter is a 4-bit binary counter that is used in UART mode and which, like the receiving counter, counts the SIOCLK clock pulses; a TXDCLK pulse is generated every 16 SIOCLK clock pulses.

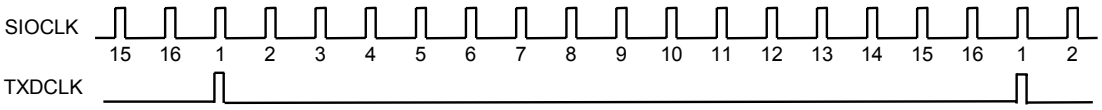

Figure 3.9.4 Generation of Transmission Clock

(8) Transmission controller

- In I/O interface mode

  In SCLK output mode with the setting SC0CR<IOC> = 0, the data in the transmission buffer is output one bit at a time to the TXD0 pin on the rising or falling edge of the shift clock which is output on the SCLK0 pin, according to the SC0CR<SCLKS> setting.

  In SCLK input mode with the setting SC0CR<IOC> = 1, the data in the transmission buffer is output one bit at a time on the TXD0 pin on the rising or falling edge of the SCLK0 input, according to the SC0CR<SCLKS> setting.

- In UART mode

  When transmission data sent from the CPU is written to the transmission buffer, transmission starts on the rising edge of the next TXDCLK, generating a transmission shift clock TXDSFT.

Handshake function

Serial channels 0 and 1 each has a $\overline{CTS}$ pin. Use of this pin allows data can be sent in units of one data format; thus, overrun errors can be avoided. The handshake functions is enabled or disabled by the SC0MOD0<CTSE> setting.

When the $\overline{CTS0}$ pin condition is high level, after completed the current data transmission, data transmission is halted until the $\overline{CTS0}$ pin state is low again. However, the INTTX0 interrupt is generated, it requests the next send data to the CPU. The next data is written in the transmission buffer and data transmission is halted.

Though there is no $\overline{RTS}$ pin, a handshake function can be easily configured by setting any port assigned to be the $\overline{RTS}$ function. The $\overline{RTS}$ should be output "High" to request send data halt after data receive is completed by software in the receive interrupt routine.

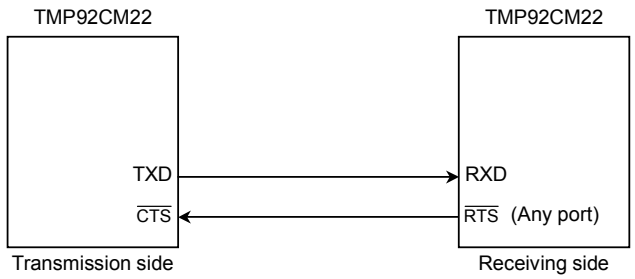

Figure 3.9.5 Handshake Function

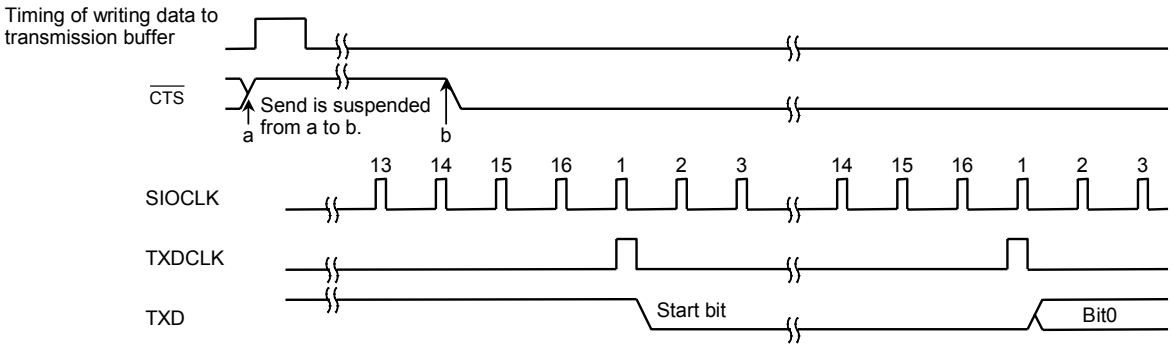

Note 1: If the $\overline{CTS}$ signal goes high during transmission, will be stop next transmission data after completion of the current transmission.

Note 2: Transmission starts on the first falling edge of the TXDCLK clock after the $\overline{CTS}$ signal has fallen.

Figure 3.9.6 $\overline{CTS}$ (Clear to send) Signal Timing

(9) Transmission buffer

The transmission buffer (SC0BUF) shifts out and sends the transmission data written from the CPU form the least significant bit in order. When all the bits are shifted out, the transmission buffer becomes empty and generates an INTTX0 interrupt.

(10) Parity control circuit

When SC0CR<PE> in the serial channel control register is set to 1, it is possible to transmit and receive data with parity. However, parity can be added only in 7-bit UART mode or 8-bit UART mode. The SC0CR<EVEN> field in the serial channel control register allows either even or odd parity to be selected.

In the case of transmission, parity is automatically generated when data is written to the transmission buffer SC0BUF. The data is transmitted after the parity bit has been stored in SC0BUF<TB7> in 7-bit UART mode or in SC0MOD0<TB8> in 8-bit UART mode. SC0CR<PE> and SC0CR<EVEN> must be set before the transmission data is written to the transmission buffer.

In the case of receiving, data is shifted into receiving buffer 1, and the parity is added after the data has been transferred to receiving buffer 2 (SC0BUF), and then compared with SC0BUF<RB7> in 7-bit UART mode or with SC0CR<RB8> in 8-bit UART mode. If they are not equal, a parity error is generated and the SC0CR<PERR> flag is set.

(11) Error flags

Three error flags are provided to increase the reliability of data reception.

1. Overrun error <OERR>

If all the bits of the next data item have been received in receiving buffer 1 while valid data still remains stored in receiving buffer 2 (SC0BUF), an overrun error is generated.

The below is a recommended flow when the overrun-error is generated.

(INTRX interrupt routine)

1) Read receiving buffer
2) Read error flag
3) if <OERR> = “1”
   then
4) Set to disable receiving (Program “0” to SC0MOD0<RXE>)
5) Wait to terminate current frame
6) Read receiving buffer
7) Read error flag
8) Set to enable receiving (Program “1” to SC0MOD0<RXE>)
9) Request to transmit again
10) Other

2. Parity error <PERR>

   The parity generated for the data shifted into receiving buffer 2 (SC0BUF) is compared with the parity bit received via the RXD pin. If they are not equal, a parity error is generated.

3. Framing error <FERR>

   The stop bit for the received data is sampled three times around the center. If the majority of the samples are 0, a framing error is generated.

(12) Timing generation

1. In UART mode

Receiving

Mode	9 Bits	8 Bits + Parity	8 Bits, 7 Bits + Parity, 7 Bits
Interrupt generation timing	Center of last bit (Bit8)	Center of last bit (Parity bit)	Center of stop bit
Framing error generation timing	Center of stop bit	Center of stop bit	Center of stop bit
Parity error generation timing	–	Center of last bit (Parity bit)	Center of stop bit
Overrun error generation timing	Center of last bit (Bit8)	Center of last bit (Parity bit)	Center of stop bit

Note: In 9 Bits mode and 8 Bits + Parity mode, interrupts coincide with the ninth bit pulse. Thus, when servicing the interrupt, it is necessary to wait for a 1-bit period (to allow the stop bit to be transferred) to allow checking for a framing error.

Transmission

Mode	9 Bits	8 Bits + Parity	8 Bits, 7 Bits + Parity, 7 Bits
Interrupt generation timing	Just before stop bit is transmitted	←	←

2. In I/O interface mode

Transmission interrupt timing	SCLK output mode	Immediately after last bit data. (See Figure 3.9.19.)
	SCLK input mode	Immediately after rise of last SCLK signal rising mode, or immediately after fall in falling mode. (See Figure 3.9.20.)
Receiving interrupt timing	SCLK output mode	Timing used to transfer received to data receive buffer 2 (SC0BUF) (e.g., immediately after last SCLK). (See Figure 3.9.21.)
	SCLK input mode	Timing used to transfer received data to receive buffer 2 (SC0BUF) (e.g., immediately after last SCLK). (See Figure 3.9.22.)

3.9.3 SFRs

SC0MOD0 (1202H)

	7	6	5	4	3	2	1	0
Bit symbol	TB8	CTSE	RXE	WU	SM1	SM0	SC1	SC0
Read/Write	R/W							
After reset	0	0	0	0	0	0	0	0
Function	Transfer data bit8	Handshake function control 0: CTS disable 1: CTS enable	Receive control 0: Receive disable 1: Receive enable	Wakeup function 0: Disable 1: Enable	Serial transmission mode 00: I/O interface mode 01: 7-bit UART mode 10: 8-bit UART mode 11: 9-bit UART mode		Serial transmission clock (UART) 00: Timer A0 trigger 01: Baud rate generator 10: Internal clock f_{IO} 11: External clcok (SCLK0 input)	

Serial transmission clock source (UART)

00	TMRA0 trigger output signal
01	Baud rate generator
10	Internal clock f_{IO}
11	External clock (SCLK0 input)

Note: The clock selection for the I/O interface mode is controlled by the serial control register (SC0CR).

Serial transmission mode

00	I/O interface mode	
01	UART mode	7-bit mode
10		8-bit mode
11		9-bit mode

Wakeup function

	9-bit UART	Other modes
0	Interrupt generated when data is received	Don't care
1	Interrupt generated only when RB8 = 1	

Receiving function

0	Receive disabled
1	Receive enabled

Handshake function ($\overline{CTS}$ pin)

0	Disabled (Always transferable)
1	Enabled

Transmission data bit8

Figure 3.9.7 Serial Mode Control Register 0 (for SIO0 and SC0MOD0)

SC1MOD0 (120AH)

	7	6	5	4	3	2	1	0
Bit symbol	TB8	CTSE	RXE	WU	SM1	SM0	SC1	SC0
Read/Write	R/W							
After reset	0	0	0	0	0	0	0	0
Function	Transfer data bit8	Handshake function control 0: CTS disable 1: CTS enable	Receive control 0: Receive disable 1: Receive enable	Wakeup function 0: Disable 1: Enable	Serial transmission mode 00: I/O interface mode 01: 7-bit UART mode 10: 8-bit UART mode 11: 9-bit UART mode		Serial transmission clock (UART) 00: Timer A0 trigger 01: Baud rate generator 10: Internal clock f_{io} 11: External clcok (SCLK1 input)	

Serial transmission clock source (UART)

00	TMRA0 trigger output signal
01	Baud rate generator
10	Internal clock f_{io}
11	External clock (SCLK1 input)

Note: The clock selection for the I/O interface mode is controlled by the serial control register (SC1CR).

Serial transmission mode

00	I/O interface mode	
01	UART mode	7-bit mode
10		8-bit mode
11		9-bit mode

Wakeup function

	9-bit UART	Other modes
0	Interrupt generated when data is received	Don't care
1	Interrupt generated only when RB8 = 1	

Receiving function

0	Receive disabled
1	Receive enabled

Handshake function ($\overline{CTS}$ pin)

0	Disabled (Always transferable)
1	Enabled

Transmission data bit8

Figure 3.9.8 Serial Mode Control Register (for SIO1 and SC1MOD)

SC0CR (1201H)

	7	6	5	4	3	2	1	0
Bit symbol	RB8	EVEN	PE	OERR	PERR	FERR	SCLKS	IOC
Read/Write	R	R/W		R (Cleared to 0 when read)			R/W	
After reset	Undefined	0	0	0	0	0	0	0
Function	Received data bit8	Parity 0: Odd 1: Even	Parity addition 0: Disable 1: Enable	1: Error Overrun	1: Error Parity	1: Error Framing	0: SCLK0 1: SCLK0	0: Baud rate generator 1: SCLK0 pin input

I/O interface input clock selection

0	Baud rate generator
1	SCLK0 pin input

Edge selection for SCLK0 pin (I/O mode)

0	Transmits and receivers data on rising edge of SCLK0.
1	Transmits and receivers data on falling edge SCLK0.

Framing error flag
Parity error flag
Overrun error flag
} Cleared to 0 when read

Parity addition enables

0	Disabled
1	Enabled

Even parity addition/check

0	Odd parity
1	Even parity

Received data bit8

Note: As all error flags are cleared after reading, do not test only a single bit with a bit-testing instruction.

Figure 3.9.9 Serial Control Register (for SIO0 and SC0CR)

SC1CR (1209H)

	7	6	5	4	3	2	1	0
Bit symbol	RB8	EVEN	PE	OERR	PERR	FERR	SCLKS	IOC
Read/Write	R	R/W		R (Cleared to 0 when read)			R/W	
After reset	Undefined	0	0	0	0	0	0	0
Function	Received data bit8	Parity 0: Odd 1: Even	Parity addition 0: Disable 1: Enable	1: Error Overrun	Parity	Framing	0: SCLK1 1: SCLK1	0: Baud rate generator 1: SCLK1 pin input

I/O interface input clock selection

0	Baud rate generator
1	SCLK1 pin input

Edge selection for SCKL1 pin (I/O mode)

0	Transmits and receives data on rising edge of SCLK1.
1	Transmits and receives data on falling edge of SCLK1.

Framing error flag
Parity error flag
Overrun error flag
} Cleared to 0 when read

Parity addition enables

0	Disabled
1	Enabled

Even parity addition/check

0	Odd parity
1	Even parity

Received data bit8

Note: As all error flags are cleared after reading, do not test only a single bit with a bit-testing instruction.

Figure 3.9.10 Serial Control Register (for SIO1 and SC1CR)

BR0CR (1203H)

	7	6	5	4	3	2	1	0
Bit symbol	–	BR0ADDE	BR0CK1	BR0CK0	BR0S3	BR0S2	BR0S1	BR0S0
Read/Write	R/W							
After reset	0	0	0	0	0	0	0	0
Function	Always write "0".	+ (16 – K)/16 division 0: Disable 1: Enable	00: ϕT0 01: ϕT2 10: ϕT8 11: ϕT32		Setting of the divided frequency			

+ (16 – K)/16 divisions enable

0	Disable
1	Enable

Setting the input clock of baud rate generator

00	Internal clock ϕT0
01	Internal clock ϕT2
10	Internal clock ϕT8
11	Internal clock ϕT32

BR0ADD (1204H)

	7	6	5	4	3	2	1	0
Bit symbol					BR0K3	BR0K2	BR0K1	BR0K0
Read/Write					R/W			
After reset					0	0	0	0
Function					Sets frequency divisor "K" (Divided by N + (16 – K)/16).			

Sets baud rate generator frequency divisor

	BR0CR<BR0ADDE> = 1		BR0CR<BR0ADDE> = 0
BR0CR <BR0S3:0> BR0ADD <BR0K3:0>	0000 (N = 16) or 0001 (N = 1)	0010 (N = 2) ~ 1111 (N = 15)	0001 (N = 1) (UART only) ~ 1111 (N = 15) 0000 (N = 16)
0000	Disable	Disable	Divided by N
0001 (K = 1) ~ 1111 (K = 15)	Disable	Divided by N + (16-K) /16	

Note1:Availability of +(16-K)/16 division function

N	UART mode	I/O mode
2 to 15	○	×
1 , 16	×	×

The baud rate generator can be set "1" in UART mode and disable +(16-K)/16 division function.Don't use in I/O interface mode.

Note2:Set BR0CR <BR0ADDE> to 1 after setting K (K = 1 to 15) to BR0ADD<BR0K3:0> when +(16-K)/16 division function is used.

Figure 3.9.11 Baud Rate Generator Control (for SIO0, BR0CR, and BR0ADD)

BR1CR (120BH)

	7	6	5	4	3	2	1	0
Bit symbol	–	BR1ADDE	BR1CK1	BR1CK0	BR1S3	BR1S2	BR1S1	BR1S0
Read/Write	R/W							
After reset	0	0	0	0	0	0	0	0
Function	Always write "0".	+ (16 – K)/16 division 0: Disable 1: Enable	00: φT0 01: φT2 10: φT8 11: φT32		Divided frequency setting			

+ (16 – K)/16 divisions enable

0	Disabled
1	Enabled

Input clock selection for baud rate generator

00	Internal clock φT0
01	Internal clock φT2
10	Internal clock φT8
11	Internal clock φT32

BR1ADD (120CH)

	7	6	5	4	3	2	1	0
Bit symbol					BR1K3	BR1K2	BR1K1	BR1K0
Read/Write					R/W			
After reset					0	0	0	0
Function					Set frequency divisor "K" (Divided by N + (16 – K)/16).			

Baud rate generator frequency divisor setting

BR1CR <BR1S3:0> / BR1ADD <BR1K3:0>	BR1CR<BR1ADDE> = 1		BR1CR<BR1ADDE> = 0
	0000 (N = 16) or 0001 (N = 1)	0010 (N = 2) ~ 1111 (N = 15)	0001 (N = 1) (UART only) to 1111 (N = 15) 0000 (N = 16)
0000	Disable	Disable	Divided by N
0001 (K = 1) ~ 1111 (K = 15)	Disable	Divided by N + (16 – K) / 16	

Note1:Availability of +(16-K)/16 division function

N	UART mode	I/O mode
2 to 15	○	×
1 , 16	×	×

The baud rate generator can be set "1" in UART mode and disable +(16-K)/16 division function.Don't use in I/O interface mode.

Note2:Set BR1CR <BR1ADDE> to 1 after setting K (K = 1 to 15) to BR1ADD<BR1K3:0> when +(16-K)/16 division function is used.

Figure 3.9.12 Baud Rate Generater Control (for SIO1, BR1CR, and BR1ADD)

SC0BUF (1200H)

7	6	5	4	3	2	1	0	
TB7	TB6	TB5	TB4	TB3	TB2	TB1	TB0	(for transmission)
RB7	RB6	RB5	RB4	RB3	RB2	RB1	RB0	(for receiving)

Note: Prohibit read-modify-write for SC0BUF

Figure 3.9.13 Serial Transmission/Receiving Buffer Register (for SIO0 and SC0BUF)

SC0MOD1 (1205H)

	7	6	5	4	3	2	1	0
Bit symbol	I2S0	FDPX0						
Read/Write	R/W	R/W						
After reset	0	0						
Function	IDLE2 0: Stop 1:Run	Duplex 0: Half 1: Full						

Figure 3.9.14 Serial Mode Control Regsiter (for SIO and SC0MOD1)

SC1BUF (1208H)

7	6	5	4	3	2	1	0	
TB7	TB6	TB5	TB4	TB3	TB2	TB1	TB0	(for transmission)
RB7	RB6	RB5	RB4	RB3	RB2	RB1	RB0	(for receiving)

Note: Prohibit read-modify-write for SC1BUF

Figure 3.9.15 Serial Transmission/Receiving Buffer Register (for SIO1 and SC1BUF)

SC1MOD1 (120DH)

	7	6	5	4	3	2	1	0
Bit symbol	I2S1	FDPX1						
Read/Write	R/W	R/W						
After reset	0	0						
Function	IDLE2 0: Stop 1: Run	Duplex 0: Half 1: Full						

Figure 3.9.16 Serial Mode Control Regsiter (for SIO and SC1MOD1)

3.9.4 Operation in Each Mode

(1) Mode 0 (I/O interface mode)

This mode allows an increase in the number of I/O pins available for transmitting data to or receiving data from an external shift register.

This mode includes the SCLK output mode to output synchronous clock SCLK and SCLK input mode to input external synchronous clock SCLK.

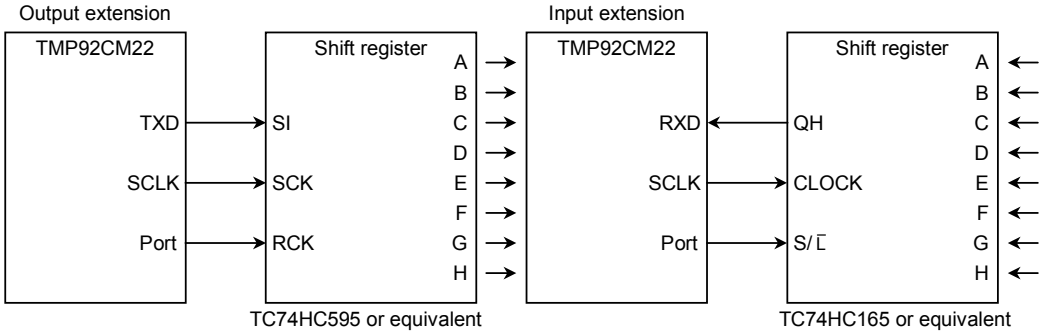

Figure 3.9.17 Example of SCLK Output Mode Connection

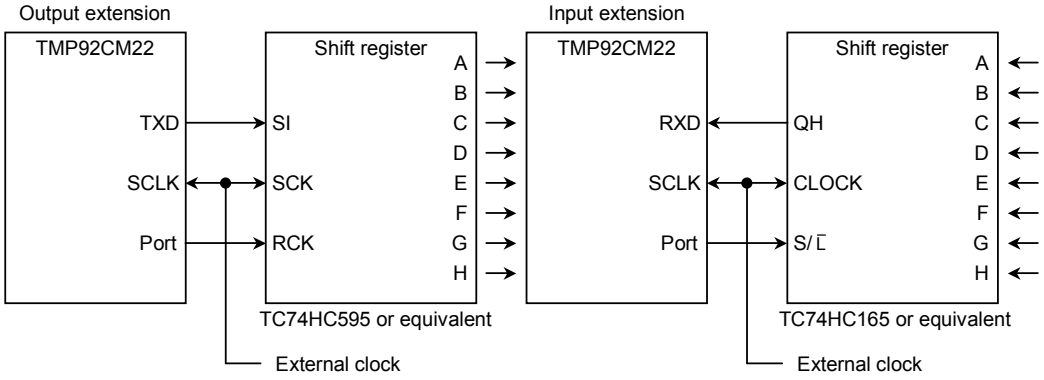

Figure 3.9.18 Example of SCLK Output Mode Connection

1. Transmission

In SCLK output mode 8-bit data and a synchronous clock are output on the TXD0 and SCLK0 pins respectively each time the CPU writes the data to the transmission buffer. When all data is outputted, INTES0<ITX0C> will be set to generate the INTTX0 interrupt.

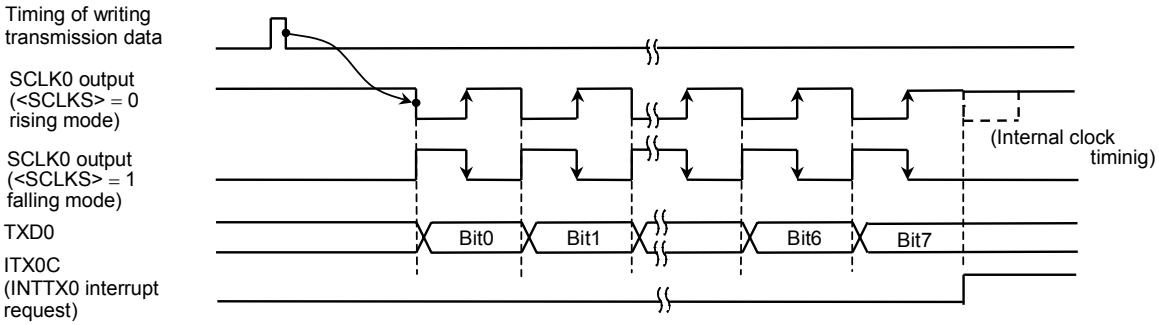

Figure 3.9.19 Transmission Operation in I/O Interface Mode (SCLK0 output mode)

In SCLK input mode, 8-bit data is output from the TXD0 pin when the SCLK0 input becomes active after the data has been written to the transmission buffer by the CPU.

When all data is outputted, INTES0<ITX0C> will be set to generate INTTX0 interrupt.

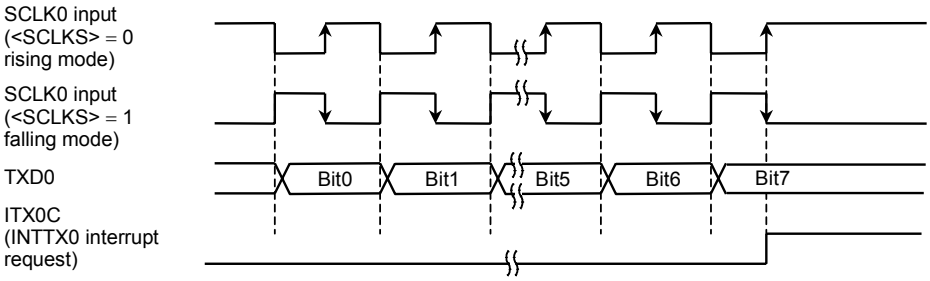

Figure 3.9.20 Transmission Operation in I/O Interface Mode (SCLK0 input mode)

2. Receiving

In SCLK output mode, the synchronous clock is outputted from SCLK0 pin and the data is shifted to receiving buffer 1. This starts when the receive interrupt flag INTES0<IRX0C> is cleared by reading the received data. When 8-bit data are received, the data will be transferred to receiving buffer 2 (SC0BUF according to the timing shown below) and INTES0<IRX0C> will be set to generate INTRX0 interrupt.

The outputting for the first SCLK0 starts by setting SC0MOD0<RXE> to 1.

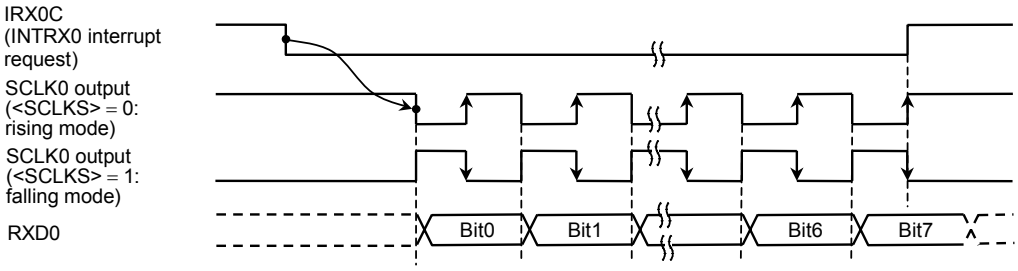

Figure 3.9.21 Receiving Operation in I/O Interface Mode (SCLK0 output mode)

In SCLK input mode, the data is shifted to receiving buffer 1 when the SCLK input becomes active after the receive interrupt flag INTES0<IRX0C> is cleared by reading the received data. When 8-bit data is received, the data will be shifted to receiving buffer 2 (SC0BUF according to the timing shown below) and INTES0<IRX0C> will be set again to be generate INTRX0 interrupt.

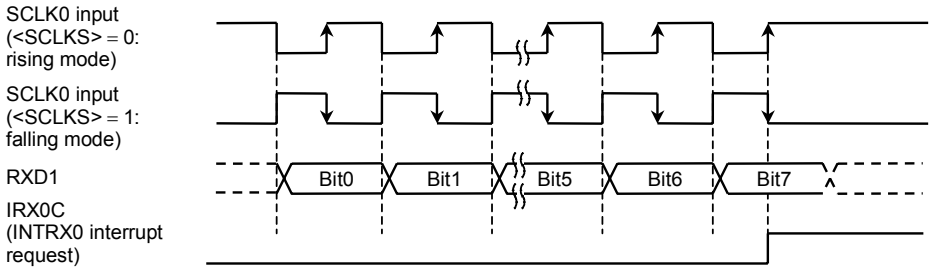

Figure 3.9.22 Receiving Operation in I/O Interface Mode (SCLK0 input mode)

Note: If receiving, set to the receive enable state (SC0MOD0<RXE> = 1) in both SCLK input mode and output mode.

3. Transmission and receiving (Full duplex mode)

When the full duplex mode is used, set the level of receive interrupt to "0" and set enable the interrupt level (1 to 6) to the transfer interrupts. In the transfer interrupt program, the receiving operation should be done like the below example before setting the next transfer data.

Example: Channel 0, SCLK output

Baud rate = 9600 bps

f_{SYS} = 19.6608 MHz

* Clock state

System clock:	High frequency and high speed (f_{SYS})
High speed clock gear:	1 time (f_{SYS})
Prescaler clock:	f_{FPH}

Main routine

	7	6	5	4	3	2	1	0	
INTES0	0	0	0	1	0	0	0	0	Set transmission interrupt level, and disable receiving interrupt.
PFCR	–	–	–	–	–	1	0	1	Set to PF0 (TXD0), PF1 (RXD0), and PF2 (SCLK0).
PFFC	–	–	–	–	–	1	–	1	
SC0MOD0	0	0	0	0	0	0	0	0	Set to I/O interface mode.
SC0MOD1	1	1	0	0	0	0	0	0	Set to full duplex mode.
SC0CR	0	0	0	0	0	0	0	0	Output SCLK, select rising edge.
BR0CR	0	0	1	1	0	0	1	1	Set to 9600 bps.
SC0MOD0	0	0	1	0	0	0	0	0	Set receive to enable.
SC0BUF	*	*	*	*	*	*	*	*	Set transmission data.

Transmission interrupt routine

Acc SC0BUF									Read receiving data.
SC0BUF	*	*	*	*	*	*	*	*	Set transmission data.

X: Don't care, –: No change

(2) Mode 1 (7-bit UART mode)

7-bit UART mode is selected by setting serial channel mode register SC0MOD0<SM1:0> to 01.

In this mode, a parity bit can be added. Use of a parity bit is enabled or disabled by the setting of the serial channel control register SC0CR<PE> bit; whether even parity or odd parity will be used is determined by the SC0CR<EVEN> setting when SC0CR<PE> is set to 1 (Enabled).

Example: When transmitting data of the following format, the control registers should be set as described below. This explanation applies to channel 0.

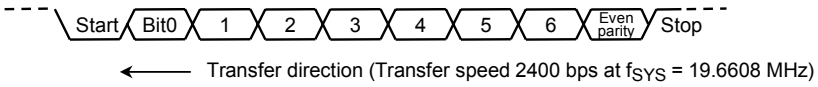

* Clock state
- System clock: High speed (f_{SYS})
- High speed clock gear: 1 time (f_{SYS})
- Prescaler clock: System clock

		7	6	5	4	3	2	1	0	
PFCR	←	–	–	–	–	–	–	–	1	Set PF0 to as TXD0 pin.
PFFC	←	–	–	–	–	–	–	–	1	
SC0MOD	←	X	0	–	X	0	1	0	1	Set to 7-bit UART mode.
SC0CR	←	X	1	1	X	X	X	0	0	Add even parity.
BR0CR	←	0	0	1	0	0	1	0	1	Set to 2400 bps.
INTES0	←	1	1	0	0	–	–	–	–	Set INTTX0 interrupt to enable, set to level 4.
SC0BUF	←	*	*	*	*	*	*	*	*	Set transmission data.

X : Don't care, – : No change

(3) Mode 2 (8-bit UART mode)

8-bit UART mode is selected by setting SC0MOD0<SM1:0> to 10. In this mode, a parity bit can be added (Use of a parity bit is enabled or disabled by the setting of SC0CR<PE>); whether even parity or odd parity will be used is determined by the SC0CR<EVEN> setting when SC0CR<PE> is set to 1 (Enabled).

Example: When receiving data of the following format, the control registers should be set as described below.

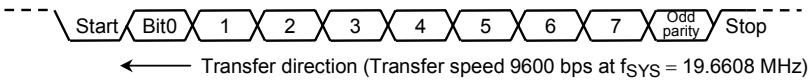

* Clock state

System clock: High speed (f_{SYS})
High speed clock gear: 1 time (f_{SYS})
Prescaler clock: f_{FPH}

Main routine

		7	6	5	4	3	2	1	0	
PFCR	←	–	–	–	–	–	–	0	–	Set PF1 (RXD0) to input pin.
SC0MOD	←	–	0	1	X	1	0	0	1	Set to 8-bit UART mode, set receives to enable.
SC0CR	←	X	0	1	X	X	X	0	0	Add odd parity.
BR0CR	←	0	0	0	1	0	1	0	1	Set to 9600 bps.
INTES0	←	–	–	–	–	1	1	0	0	Set INTTX0 interrupt to enable, set to level 4.

Interrupt routine processing

Acc	←	SC0CR AND 00011100	Check for error.
if Acc	≠	0 then ERROR	
Acc	←	SC0BUF	Read receiving data.

X : Don't care, – : No change

(4) Mode 3 (9-bit UART mode)

9-bit UART mode is selected by setting SC0MOD0<SM1:0> to 11. In this mode parity bit cannot be added.

In the case of transmission the MSB (9th bit) is programmed to SC0MOD0<TB8>. In the case of receiving it is stored in SC0CR<RB8>. When the buffer is written and read, the MSB is read or written first, before the rest of the SC0BUF data.

Wakeup function

In 9-bit UART mode, the wakeup function for slave controllers is enabled by setting SC0MOD0<WU> to 1. The interrupt INTRX0 occurs only when <RB8> = 1.

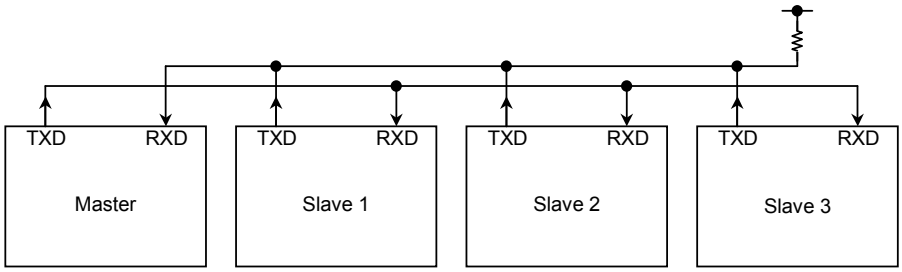

Note: The TXD pin of each slave controller must be in open-drain output mode.

Figure 3.9.23 Serial Link Using Wakeup Function

Protocol

1. Select 9-bit UART mode on the master and slave controllers.
2. Set the SC0MOD0<WU> bit on each slave controller to 1 to enable data receiving.
3. The master controller transmits one-frame data including the 8-bit select code for the slave controllers. The MSB (Bit8) <TB8> is set to "1".

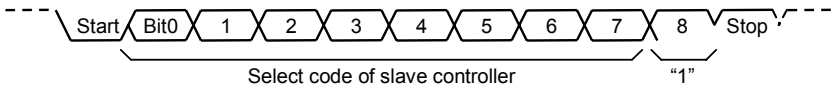

4. Each slave controller receives the above frame. If it matches with own select code, clears <WU> bit to "0".
5. The master controller transmits data to the specified slave controller whose SC0MOD0<WU> bit is cleared to "0". The MSB (Bit8) <TB8> is cleared to "0".

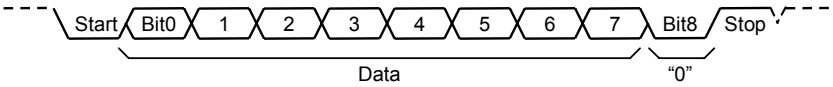

6. The other slave controllers (whose <WU> bits remain at 1) ignore the received data because their MSB (Bit8 or <RB8>) are set to "0", disabling INTRX0 interrupts. The slave controller (<WU> bit = "0") can transmit data to the master controller, and it is possible to indicate the end of data receiving to the master controller by this transmission.

Example: To link two slave controllers serially with the master controller using the system clock f_{SYS} as the transfer clock.

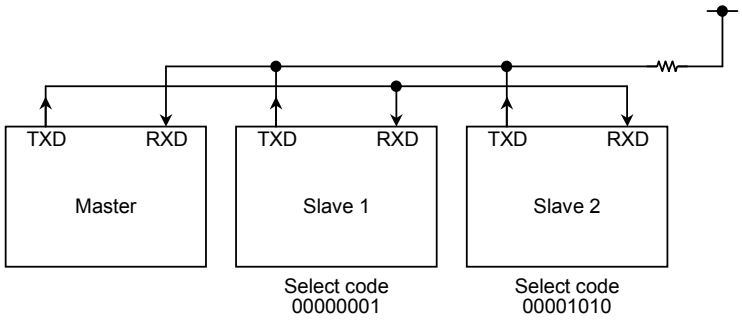

- Master controller setting

```
Main routine
PFCR      ← – – – – – – 0 1   }
PFFC      ← – – – – – – X 1   }  Set PF0 to TXD0, and set PF1 to RXD0 pin.
INTES0    ← 1 1 0 0 1 1 0 1     Set INTTX0 to enable, and set interrupt level to level 4.
                                Set INTRX0 to enable, and set interrupt level to level 5.
SC0MOD0   ← 1 0 1 0 1 1 1 0     Set to 9-bit UART mode, and set transfer clock to fSYS.
SC0BUF    ← 0 0 0 0 0 0 0 1     Set select code of slave 1.

Interrupt routine (INTTX0)
SC0MOD0   ← 0 – – – – – – –     Set TB8 to "0".
SC0BUF    ← * * * * * * * *     Set transmission data.
```

- Slave setting

```
Main routine
PFCR      ← – – – – – – 0 0   }
PFFC      ← – – – – – – X 1   }  Set PF0 to TXD (open-drain output), and PC1 to RXD.

INTES0    ← 1 1 0 1 1 1 1 0     Set INTTX0 and INTRX0 to enable.
SC0MOD0   ← 0 0 1 1 1 1 1 0     Set to <WU> = "1" in 9-bit UART mode transfer clock fSYS.

Interrupt routine (INTRX0)

Acc ← SC0BUF
if Acc = Select code
Then      ← – – – 0 – – – –     Clear to <WU> = "0".
SC0MOD0
```

3.9.5 Support for IrDA Mode

SIO0 includes support for the IrDA 1.0 infrared data communication specification. Figure 3.9.24 shows the block diagram.

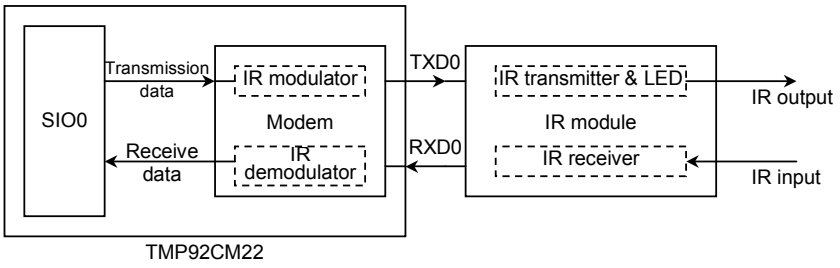

Figure 3.9.24 Block Diagram of IrDA

(1) Modulation of transmission data

When the transmission data is 0, output "H" level with either 3/16 or 1/16 times for width of baud-rate (Selectable in software). When data is "1", modem output "L" level.

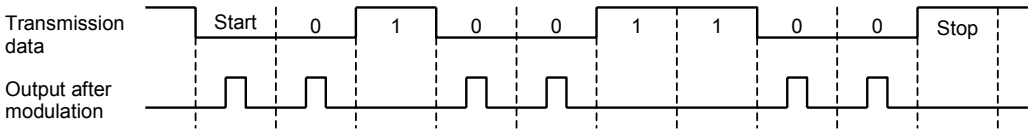

Figure 3.9.25 Example of Modulation of Transmission Data

(2) Modulation of receiving data

When the receive data has the effective high level pulse width (Software selectable), the modem outputs "0" to SIO0. Otherwise modem outputs "1" to SIO0. Receive pulse logic is selectable by SIRCR<RXSEL>.

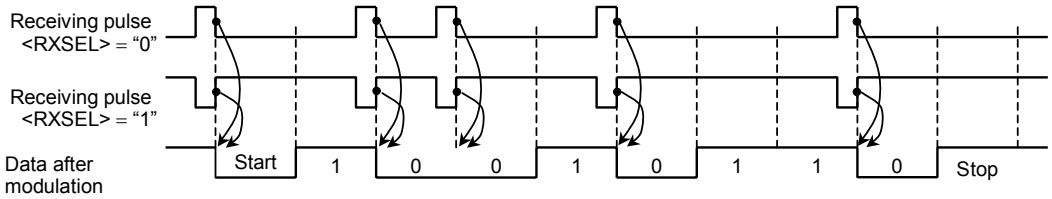

Figure 3.9.26 Example of Modulation of Receiving Data

(3) Data format

Format of transmission/receiving must set to data length 8-bit, without parity bit, 1 bit of stop bit.

Any other settings don't guarantee the normal operation.

(4) SFR

Figure 3.9.27 shows the control register SIRCR. If change setting this register, must set it after set operation of transmission/receiving to disable (Both <TXEN> and <RXEN> of this register should be clear to 0).

Any changing for this register during transmission or receiving operation doesn't guarantee the normal operation.

The following example describes how to set this register:

1) SIO setting ; Set SIO side.
↓
2) LD (SIRCR), 07H ; Set receiving effect pulse width to 16X.
3) LD (SIRCR), 37H ; TXEN, RXEN enable the transmission and receiving.
↓
4) Transmission/receiving ; The modem operates as follows:
   - SIO0 starts transmitting.
   - IR receiver starts receiving.

(5) Notes

1. Making baud rate when using IrDA

   In baud rate during using IrDA, must set "01" to SC0MOD0<SC1:0> in SIO by using baud rate generator.

   TA0TRG, f_{SYS}, SCLK0 input of except for it can not using.

2. Output pulse width and baud rate generator during transmission IrDA

   As the IrDA 1.0 physical layer specification, the data transfer speed and infra-red pulse width is specified.

Table 3.9.5 Specification of Transfer Rate and Pulse Width

Transfer Rate	Modulation	Transfer Rate Tolerance (% of Rate)	Minimum of Pulse Width	Typical of Pulse Width 3/16	Maximum of Pulse Width
2.4 kbps	RZI	± 0.87	1.41 μs	78.13 μs	88.55 μs
9.6 kbps	RZI	± 0.87	1.41 μs	19.53 μs	22.13 μs
19.2 kbps	RZI	± 0.87	1.41 μs	9.77 μs	11.07 μs
38.4 kbps	RZI	± 0.87	1.41 μs	4.88 μs	5.96 μs
57.6 kbps	RZI	± 0.87	1.41 μs	3.26 μs	4.34 μs
115.2 kbps	RZI	± 0.87	1.41 μs	1.63 μs	2.23 μs

The infra-red pulse width is specified either baud rate T × 3/16 or 1.6 μs (1.6 μs is equal to T × 3/16 pulse width when baud rate is 115.2 kbps).

The TMP92CM22 has function which is selectable the transmission pulse width either 3/16 or 1/16. But T × 1/16 pulse width can be selected when the baud rate is equal or less than 38.4 kbps only. When 57.6 kbps and 115.2 kbps, the output pulse width should not be set to T × 1/16.

As the same reason, + (16 – K)/16 division function in the baud rate generator of SIO0 cannot be used to generate 115.2 kbps baud rate.

Also when the 38.4 kbps and 1/16 pulse width, + (16 – K)/16 division function cannot be used.

Table 3.9.6 shows baud rate and pulse width for (16 – K)/16 division function.

Table 3.9.6 Baud Rate and Pulse Width for (16 – K)/16 Division Function

Output Pulse Width	Baud Rate 115.2 kbps	57.6 kbps	38.4 kbps	19.2 kbps	9.6 kbps	2.4 kbps
T × 3/16	×	○	○	○	○	○
T × 1/16	–	–	×	○	○	○

○: Can be used (16 – K)/16 division function.
×: Cannot be used (16 – K)/16 division function.
–: Cannot be set to T × 1/16 pulse width.

SIRCR (1207H)

	7	6	5	4	3	2	1	0
Bit symbol	PLSEL	RXSEL	TXEN	RXEN	SIRWD3	SIRWD2	SIRWD1	SIRWD0
Read/Write	R/W							
After reset	0	0	0	0	0	0	0	0
Function	Selection transmission pulse width 0: 3/16 1: 1/16	Receiving data logic 0: "H" pulse 1: "L" pulse	Transmission data 0: Disable 1: Enable	Receiving operation 0: Disable 1: Enable	Select receiving effective pulse width Set effective pulse width for equal or more than 2x × (Value + 1) + 100 ns Can be set: 1 to 14 Cannot be set: 0, 15			

Select receiving effective pulse width
Formula:
Receiving effective pulse width ≥ 2x × (Setting value + 1) + 100 ns x = $1/f_{SYS}$

0000	Cannot be set.
0001	Pulse width of equal or more than 4x + 100 ns is effective.
≀	
1110	Pulse width of equal or more than 30x + 100 ns is effective.
1111	Cannot be set.

Enable of receiving operation

0	Disable receiving operation. (Received input is ignored.)
1	Enable receiving operation.

Enable of transmission operation

0	Disable transmission operation (Input from SIO is ignored.)
1	Enable transmission operation.

Select transmission pulse width

0	Pulse width of 3/16
1	Pulse width of 1/16

Note: If a pulse width complying with the IrDA 1.0 standard (1.6μs min.) can be guaranteed with a low baud rate, setting this bit to "1" shortens the duration of infrared ray activation resulting in reduced power dissipation.

Figure 3.9.27 IrDA Control Register

3.10 Serial Bus Interface (SBI)

The TMP92CM22 has a 1-channel serial bus interface. Serial bus interface (SBI0) include following 2 operation modes.

- I²C bus mode (Multi master)
- Clocked-synchronous 8-bit SIO mode

The serial bus interface is connected to an external device through P91 (SDA) and P92 (SCL) in the I²C bus mode; and through P90 (SCK), P91 (SO), and P92 (SI) in the clocked-synchronous 8-bit SIO mode.

Each pin is specified as follows.

	P9ODE <P92ODE, P91ODE>	P9CR <P92C, P91C, P90C>	P9FC <P92F, P91F, P90F>
I^2C bus mode	11	11X	11X
Clocked-synchronous 8-bit SIO mode	XX	011 010	X11

X: Don't care

3.10.1 Configuration

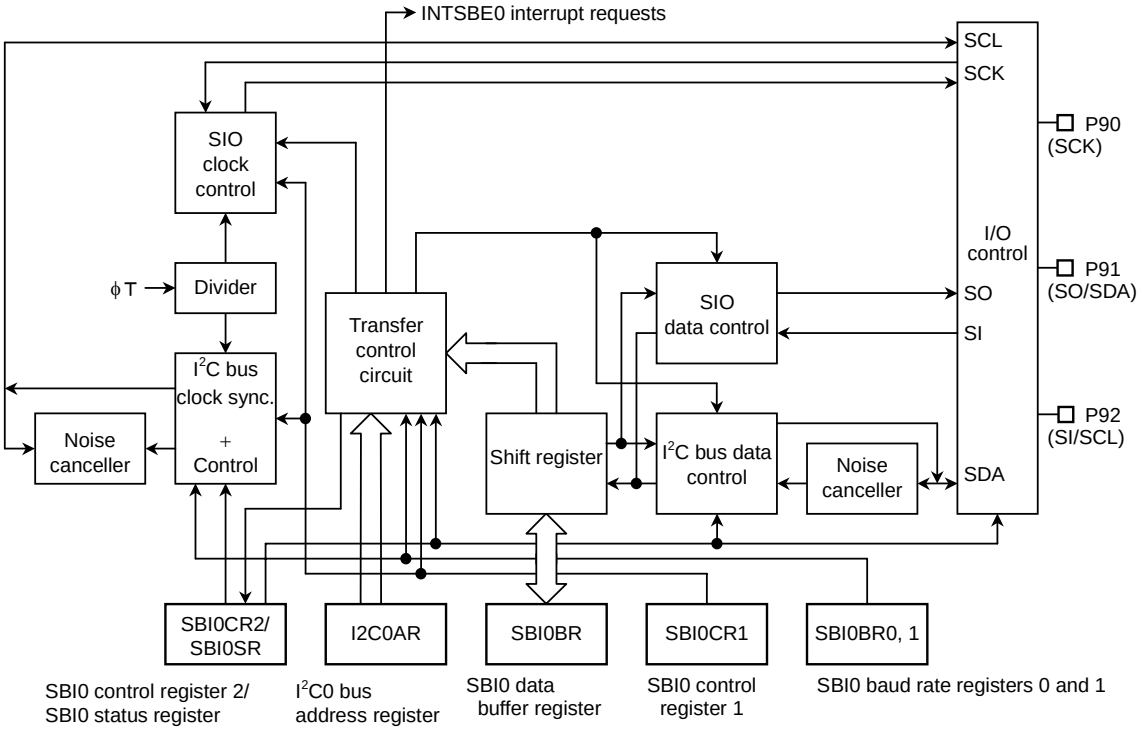

Figure 3.10.1 Serial Bus Interface 0 (SBI0)

3.10.2 Control

The following registers are used to control the serial bus interface and monitor the operation status.

- Serial bus interface 0 control register 1 (SBI0CR1)
- Serial bus interface 0 control register 2 (SBI0CR2)
- Serial bus interface 0 data buffer register (SBI0DBR)
- I²C bus 0 address register (I2C0AR)
- Serial bus interface 0 status register (SBI0SR)
- Serial bus interface 0 baud rate register 0 (SBI0BR0)
- Serial bus interface 0 baud rate register 1 (SBI0BR1)

The above registers differ depending on a mode to be used.

Refer to Section 3.10.4 "I²C Bus Mode Control Register" and 3.10.7 "Clocked-synchronous 8-Bit SIO Mode Control".

3.10.3 Data Format in I²C Bus Mode

Data format in I²C bus mode is shown Figure 3.10.3.

(a) Addressing format

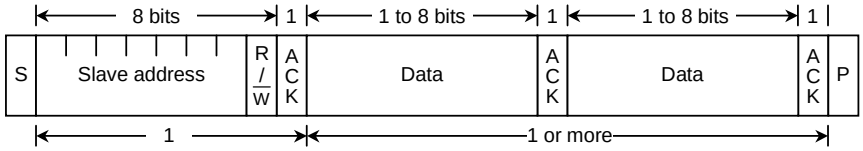

(b) Addressing format (with restart)

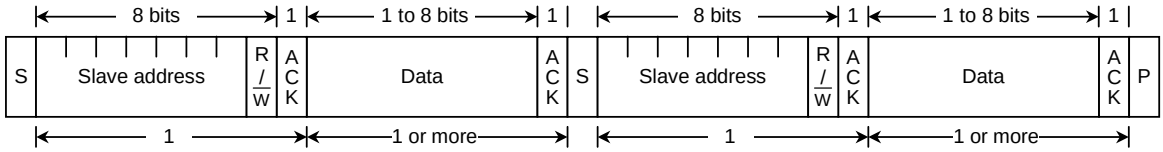

(c) Free data format (transfer format transfer from master device to slave device)

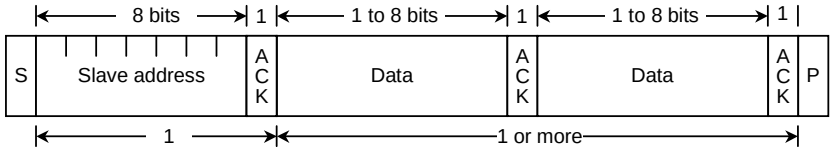

S: Start condition

R/$\overline{W}$: Direction bit

ACK: Acknowledge bit

P: Stop condition

Figure 3.10.2 Data Format in I²C Bus Mode

3.10.4 I²C Bus Mode Control Register

The following registers are used to control and monitor the operation status when using the serial bus interface (SBI) in the I²C bus mode.

Serial Bus Interface Control Register 1

SBI0CR1 (1240H)

Read-modify-write instruction is prohibited.

	7	6	5	4	3	2	1	0
Bit symbol	BC2	BC1	BC0	ACK		SCK2	SCK1	SCK0/ SWRMON
Read/Write	W			R/W		W		R/W
After reset	0	0	0	0		0	0	0/1 (Note 3)
Function	Select number of transferred bits (Note 1)			Acknowledge mode specification 0:Not generate 1:Generate		Internal serial clock selection and software reset monitor (Note 2)		

Internal serial clock selection <SCK2:0> at write

000	n = 5	– kHz (Note4)
001	n = 6	– kHz (Note4)
010	n = 7	– kHz (Note4)
011	n = 8	75.8 kHz
100	n = 9	38.5 kHz
101	n = 10	19.4 kHz
110	n = 11	9.73 kHz
111	(Reserved)	(Reserved)

System clock: f_{SYS}

f_{SYS} = 20 MHz (output to SCL pin)

Frequency = $\frac{f_{SYS}}{2^n + 8}$ [Hz]

Software reset state monitor <SWRMON> at read

0	During software reset
1	Initial data

Acknowledge mode selection

0	Not generate clock pulse for acknowledge signal
1	Generate clock for acknowledge signal

Select number of bits transferred

<BC2:0>	<ACK> = 0		<ACK> = 1	
	Number of clock pulses	Data length	Number of clock pulses	Data length
000	8	8	9	8
001	1	1	2	1
010	2	2	3	2
011	3	3	4	3
100	4	4	5	4
101	5	5	6	5
110	6	6	7	6
111	7	7	8	7

Note 1: Set the <BC2:0> to "000" before switching to a clocked-synchronous 8-bit SIO mode.

Note 2: For the frequency of the SCL line clock, see section 3.10.5 (3) "Serial clock".

Note 3: Initial data of SCK0 is "0", SWRMON is "1".

Note 4: This I2C bus circuit does not support high-speed mode, it supports standard mode only. The fscl speed can be selected over 100kbps by fc and <SCK2:0>, however it's irregular operation.

Figure 3.10.3 Register for I²C Bus Mode

Serial Bus Interface Control Register 2

SBI0CR2 (1243H)

Read-modify-write instruction is prohibited.

	7	6	5	4	3	2	1	0
Bit symbol	MST	TRX	BB	PIN	SBIM1	SBIM0	SWRST1	SWRST0
Read/Write	W				W (Note 1)		W (Note 1)	
After reset	0	0	0	1	0	0	0	0
Function	Master/ slave selection	Transmitter/ receiver selection	Start/stop condition generation	Release INTSBE0 interrupt request	Serial bus interface operation mode selection (Note 2) 00: Port mode 01: SIO mode 10: I^2C bus mode 11: (Reserved)		Software reset control write “10” and “01” in order, then an internal software reset signal is generated.	

Serial bus interface operating mode selection (Note 2)

00	Port mode (Serial bus interface output disabled)
01	Clocked-synchronous 8-bit SIO mode
10	I^2C bus mode
11	(Reserved)

INTSBE0 interrupt request

0	–
1	Release interrupt request

Start/stop condition generation

0	Generates the stop condition
1	Generates the start condition

Transmitter/receiver selection

0	Receiver
1	Transmitter

Master/slave selection

0	Slave
1	Master

Note 1: Reading this register function as SBI0SR register.

Note 2: Switch a mode to port mode after confirming that the bus is free.
Switch a mode between I^2C bus mode and clocked-synchronous 8-bit SIO mode after confirming that input signals via port are high level.

Figure 3.10.4 Register for I^2C Bus Mode

Serial Bus Interface Status Register

SBI0SR (1243H)

Read-modify-write instruction is prohibited.

	7	6	5	4	3	2	1	0
Bit symbol	MST	TRX	BB	PIN	AL	AAS	AD0	LRB
Read/Write	R							
After reset	0	0	0	1	0	0	0	0
Function	Master/ slave status selection monitor	Transmitter/ receiver status selection monitor	I^2C bus status monitor	INTSBE0 interrupt request monitor	Arbitration lost detection monitor 0: – 1: Detected	Slave address match detection monitor 0: Undetected 1: Detected	GENERAL CALL detection monitor 0: Undetected 1: Detected	Last received bit monitor 0: 0 1: 1

Last received bit monitor

0	Last received bit was 0.
1	Last received bit was 1.

GENERAL CALL detection monitor

0	Undetected
1	GENERAL CALL detected

Slave address match detection monitor

0	Undetected
1	Slave address match or GENERAL CALL detected

Arbitration lost detection monitor

0	–
1	Arbitration lost

INTSBE0 interrupt request monitor

0	Interrupt requested
1	Interrupt released

I^2C bus status monitor

0	Free
1	Busy

Transmitter/receiver status monitor

0	Receiver
1	Transmitter

Master/slave status monitor

0	Slave
1	Master

Note: Writing in this register functions as SBI0CR2.

Figure 3.10.5 Register for I^2C Bus Mode

Serial Bus Interface Baud Rate Register 0

SBI0BR0 (1244H)

Read-modify-write instruction is prohibited.

	7	6	5	4	3	2	1	0
Bit symbol	–	I2SBI0						
Read/Write	W	R/W						
After reset	0	0						
Function	Always write "0".	IDLE2 0: Stop 1: Run						

Operation during IDLE 2 mode

0	Stop
1	Run

Serial Bus Interface Baud Rate Register 1

SBI0BR1 (1245H)

Read-modify-write instruction is prohibited.

	7	6	5	4	3	2	1	0
Bit symbol	P4EN	–						
Read/Write	W	W						
After reset	0	0						
Function	Internal clock 0: Stop 1: Run	Always write "0".						

Operation during IDLE 2 mode

0	Stop
1	Run

Sirial Bus Interface Data Buffer Register

SBI0DBR (1241H)

Read-modify-write instruction is prohibited.

	7	6	5	4	3	2	1	0
Bit symbol	RB7/TB7	RB6/TB6	RB5/TB5	RB4/TB4	RB3/TB3	RB2/TB2	RB1/TB1	RB0/TB0
Read/Write	R (Receiving)/W (Transmission)							
After reset	Undefined							

Note 1: When writing transmission data, start from the MSB (Bit7). Receiving data is placed from LSB (Bit0).

Note 2: SBI0DBR can't be read the written data. Therefore read-modify-write instruction (e.g., "BIT" instruction) is prohibited.

Note 3: Written data in SBI0DBR is cleared by INTSBE0 signal.

I^2C Bus Address Register

I2C0AR (1242H)

Read-modify-write instruction is prohibited.

	7	6	5	4	3	2	1	0
Bit symbol	SA6	SA5	SA4	SA3	SA2	SA1	SA0	ALS
Read/Write	W							
After reset	0	0	0	0	0	0	0	0
Function	Slave address selection for when device is operating as slave device							Address recognition mode specification

Address recognition mode specification

0	Slave address recognition
1	Non slave address recognition

Figure 3.10.6 Register for I^2C Bus Mode

3.10.5 Control in I^{2}C Bus Mode

(1) Acknowledge mode specification

Set the SBI0CR1<ACK> to 1 for operation in the acknowledge mode. The TMP92CM22 generates an additional clock pulse for an acknowledge signal when operating in master mode. In the transmitter mode during the clock pulse cycle, the SDA pin is released in order to receive the acknowledge signal from the receiver. In the receiver mode during the clock pulse cycle, the SDA pin is set to the low in order to generate the acknowledge signal.

Clear the <ACK> to 0 for operation in the non-acknowledge mode, the TMP92CM22 does not generate a clock pulse for the acknowledge signal when operating in the master mode.

(2) Select number of transfer bits

The SBI0CR1<BC2:0> is used to select a number of bits for next transmission/ receiving data.

Since the <BC2:0> is cleared to 000 as a start condition, a slave address and direction bit are transferred in 8 bits. Other than these, the <BC2:0> retains a specified value.

(3) Serial clock

1. Clock source

The SBI0CR1<SCK2:0> is used to select a maximum transfer frequency outputted on the SCL pin in master mode. Set the baud rates, which have been calculated according to the formula below, to meet the specifications of the I^{2}C bus, such as the smallest pulse width of t_{LOW}.

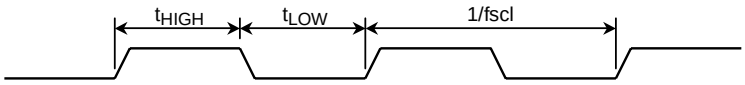

$t_{LOW} = 2^{n-1}/f_{SBI}$

$t_{HIGH} = 2^{n-1}/f_{SBI} + 8/f_{SBI}$

$fscl = 1/(t_{LOW} + t_{HIGH})$

$= \dfrac{f_{SBI}}{2^n + 8}$

SBI0CR1<SCK2:0>	n
000	5
001	6
010	7
011	8
100	9
101	10
110	11

Note: f_{SBI} shows f_{SYS}.

Figure 3.10.7 Clock Source

2. Clock synchronization

In the I²C bus mode, in order to wired-AND a bus, a master device which pulls down a clock line to low level, in the first place, invalidate a clock pulse of another master device which generates a high-level clock pulse. The master device with a high-level clock pulse needs to detect the situation and implement the following procedure.

The TMP92CM22 has a clock synchronization function for normal data transfer even when more than one master exists on the bus.

The example explains the clock synchronization procedures when two masters simultaneously exist on a bus.

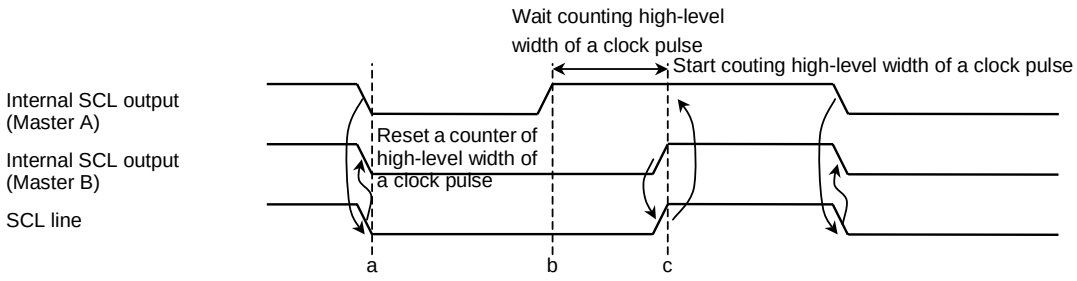

Figure 3.10.8 Clock Synchronization

As master A pulls down the internal SCL output to the low level at point “a”, the SCL line of the bus becomes the low level. After detecting this situation, master B resets a counter of high-level width of an own clock pulse and sets the internal SCL output to the low level.

Master A finishes counting low-level width of an own clock pulse at point “b” and sets the internal SCL output to the high level. Since master B holds the SCL line of the bus at the low level, master A waits for counting high-level width of an own clock pulse. After master B finishes counting low-level width of an own clock pulse at point “c” and master A detects the SCL line of the bus at the high level, and starts counting high level of an own clock pulse. The clock pulse on the bus is determined by the master device with the shortest high-level width and the master device with the longest low-level width from among those master devices connected to the bus.

(4) Slave address and address recognition mode specification

When the TMP92CM22 is used as a slave device, set the slave address <SA6:0> and <ALS> to the I2C0AR. Clear the <ALS> to “0” for the address recognition mode.

(5) Master/slave selection

Set the SBI0CR2<MST> to “1” for operating the TMP92CM22 as a master device. Clear the SBI0CR2<MST> to “0” for operation as a slave device. The <MST> is cleared to “0” by the hardware after a stop condition on the bus is detected or arbitration is lost.

(6) Transmitter/receiver selection

Set the SBI0CR2<TRX> to "1" for operating the TMP92CM22 as a transmitter. Clear the <TRX> to "0" for operation as a receiver. In slave mode, when transfer data in addressing format, when received slave address is same value with setting value to I2C0AR, or GENERAL CALL is received (All 8-bit data are "0" after a start condition), the <TRX> is set to "1" by the hardware if the direction bit (R/$\overline{W}$) sent from the master device is "1", and <TRX> is cleared to "0" by the hardware if the bit is "0".

In the master mode, after an acknowledge signal is returned from the slave device, the <TRX> is cleared to "0" by the hardware if a transmitted direction bit is "1", and is set to "1" by the hardware if it is "0". When an acknowledge signal is not returned, the current condition is maintained.

The <TRX> is cleared to "0" by the hardware after a stop condition on the bus is detected or arbitration is lost.

(7) Start/stop condition generation

When programmed "1111" to SBI0CR2 <MST, TRX, BB, PIN> in during SBI0SR<BB> is "0", slave address and direction bit which are set to SBI0DBR and start condition are output on a bus. And it is necessary to set transmitted data to the data buffer register (SBI0DBR) and set "1" to <ACK> beforehand.

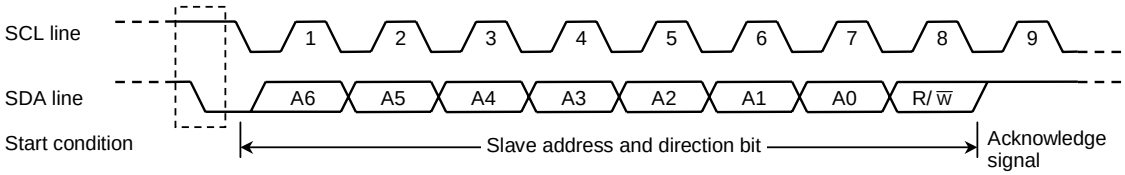

Figure 3.10.9 Generation of Start Condition and Slave Address

When programmed "0" to SBI0CR2<BB> and "111" to <MST, TRX, PIN> in during SBI0SR<BB> is "1", start a sequence of stop condition output. Do not modify the contents of <MST, TRX, BB, and PIN> until a stop condition is generated on a bus.

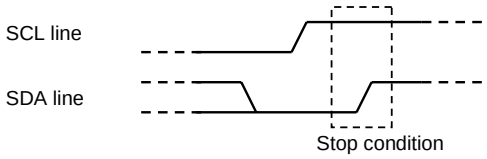

Figure 3.10.10 Generation of Stop Condition

The state of the bus can be ascertained by reading the contents of SBI0SR<BB>. SBI0SR<BB> will be set to 1 (Bus busy status) if a start condition has been detected on the bus, and will be cleared to 0 if a stop condition has been detected (Bus free status).

(8) Interrupt service requests and interrupt cancellation

When a serial bus interface interrupt request 0 (INTSBE0) occurs, the SBI0SR2 <PIN> is cleared to "0". During the time that the SBI0SR2<PIN> is "0", the SCL line is pulled down to the low level.

The <PIN> is cleared to "0" when end of transmission or receiving 1 word of data. And when writing data to SBI0DBR or reading data from SBI0DBR, <PIN> is set to "1".

The time from the <PIN> being set to "1" until the SCL line is released takes t_{LOW}.

In the address recognition mode (<ALS> = 0), <PIN> is cleared to "0" when the received slave address is the same as the value set at the I2C0AR or when a GENERAL CALL is received (All 8-bit data are "0" after a start condition). Although SBI0CR2<PIN> can be set to "1" by the program, the <PIN> is not clear it to "0" when it is programmed "0".

(9) Serial bus interface operation mode selection

SBI0CR2<SBIM1:0> is used to specify the serial bus interface operation mode. Set SBI0CR2<SBIM1:0> to "10" when the device is to be used in I²C bus mode after confirming pin condition of serial bus interface to "H".

Switch a mode to port after confirming a bus is free.

(10) Arbitration lost detection monitor

Since more than one master device can exist simultaneously on the bus in I²C bus mode, a bus arbitration procedure has been implemented in order to guarantee the integrity of transferred data.

Data on the SDA line is used for I²C bus arbitration.

The following shows an example of a bus arbitration procedure when two master devices exist simultaneously on the bus. Master A and master B output the same data until point "a". After master A outputs "L" and master B, "H", the SDA line of the bus is wire-AND and the SDA line is pulled down to the low level by master A. When the SCL line of the bus is pulled up at point b, the slave device reads the data on the SDA line, that is, data in master A. A data transmitted from master B becomes invalid. The state in master B is called "ARBITRATION LOST". Master B device that loses arbitration releases the internal SDA output in order not to affect data transmitted from other masters with arbitration. When more than one master sends the same data at the first word, arbitration occurs continuously after the second word.

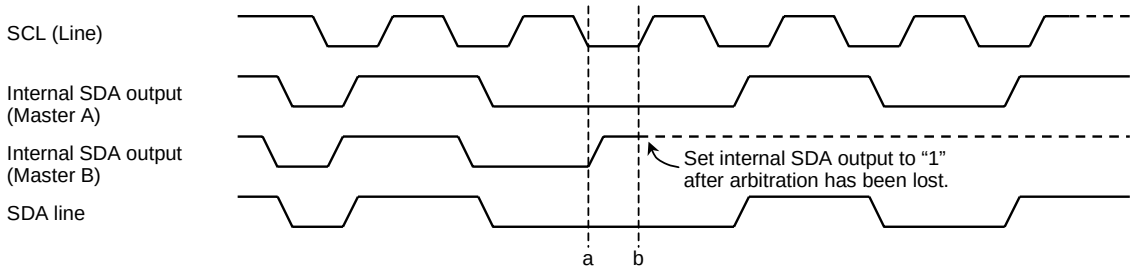

Figure 3.10.11 Arbitration Lost

The TMP92CM22 compares the levels on the bus's SDA line with those of the internal SDA output on the rising edge of the SCL line. If the levels do not match, arbitration is lost and SBI0SR<AL> is set to "1".

When SBI0SR<AL> is set to "1", SBI0SR<MST, TRX> are cleared to "00" and the mode is switched to slave receiver mode. Thus, clock output is stopped in data transfer after setting <AL> = "1".

SBI0SR <AL> is cleared to "0" when data is written to or read from SBI0DBR or when data is written to SBI0CR2.

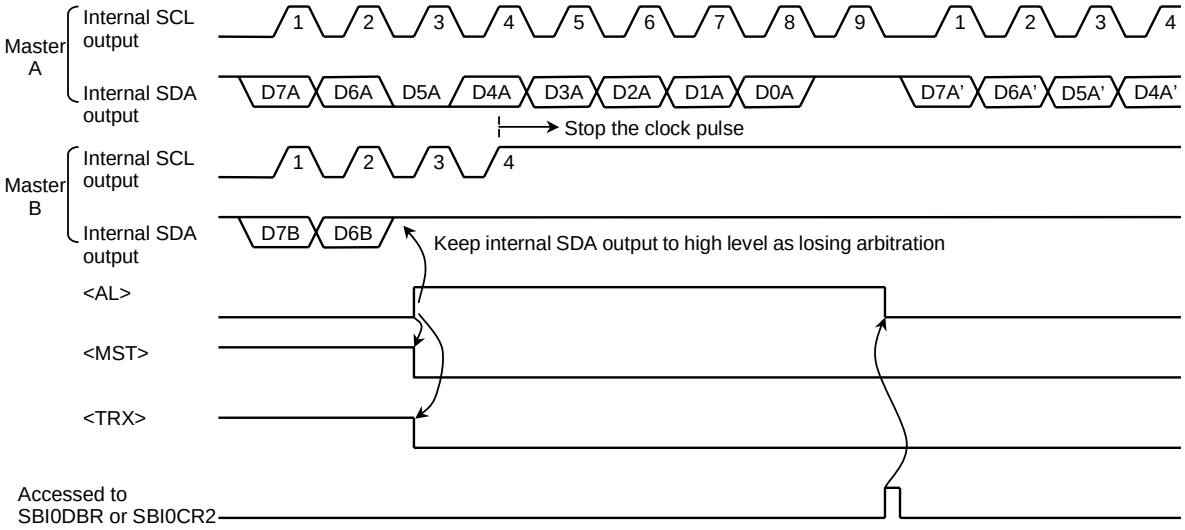

Figure 3.10.12 Example of when TMP92CM22 is a Master Device B (D7A = D7B, D6A = D6B)

(11) Slave address match detection monitor

SBI0SR<AAS> operates following in during slave mode; In address recognition mode (e.g., when I2C0AR<ALS> = "0"), when received GENERAL CALL or same slave address with value set to I2C0AR, SBI0SR<AAS> is set to "1". When <ALS> = "1", SBI0SR<AAS> is set to "1" after the first word of data has been received. SBI0SR<AAS> is cleared to "0" when data is written to SBI0DBR or read from SBI0DBR.

(12) GENERAL CALL detection monitor

SBI0SR<AD0> operates following in during slave mode; when received GENERAL CALL (all 8-bit data is "0", after a start condition), SBI0SR<AD0> is set to "1". And SBI0SR<AD0> is cleared to "0" when a start condition or stop condition on the bus is detected.

(13) Last received bit monitor

The value on the SDA line detected on the rising edge of the SCL line is stored in the SBI0SR<LRB>. In the acknowledge mode, immediately after an INTSBE0 interrupt request has been generated, an acknowledge signal is read by reading the contents of the SBI0SR<LRB>.

(14) Software reset function

The software reset function is used to initialize the SBI circuit, when SBI is rocked by external noises, etc.

When write first “10” next “01” to SBI0CR2<SWRST1:0>, reset signal is inputted to serial bus interface circuit, and circuit is initialized. All command registers except SBI0CR2<SBIM1:0> and status flag except SBI0CR2<SBIM1:0> are initialized to value of just after reset. SBI0CR1<SWRMON> is set to “1” automatically when completed initialization of serial bus interface.

(15) Serial bus interface data buffer register (SBI0DBR)

The received data can be read and transmission data can be written by reading or writing SBI0DBR.

In the master mode, after the slave address and the direction bit are set in this register, the start condition is generated.

(16) I^2C bus address register (I2C0AR)

I2C0AR<SA6:0> is used to set the slave address when the TMP92CM22 functions as a slave device.

The slave address outputted from the master device is recognized by setting the I2C0AR<ALS> to “0”. And, the data format becomes the addressing format. When set <ALS> to “1”, the slave address is not recognized, the data format becomes the free data format.

(17) Baud rate register (SBI0BR1)

Write “1” to baud rate circuit control register SBI0BR1<P4EN> before using I^2C bus.

(18) Setting register for IDLE2 mode operation (SBI0BR0)

SBI0BR0<I2SBI0> is the register setting operation/stop during IDLE2 mode. Therefore, setting <I2SBI0> is necessary before the HALT instruction is executed.

3.10.6 Data Transfer in I^{2}C Bus Mode

(1) Device initialization

In first, set the SBI0BR1<P4EN>, SBI0CR1<ACK, SCK2:0>. Set SBI0BR1<P4EN> to "1" and clear bits 7 to 5 and 3 in the SBI0CR1 to "0".

Next, set a slave address <SA6:0> and the <ALS> (<ALS> = "0" when an addressing format) to the I2C0AR.

And, write "000" to SBI0CR2<MST, TRX, BB>, "1" to <PIN>, "10" to <SBIM1:0> and "00" to <SWRST1:0>. Set initialization status to slave receiver mode by this setting.

(2) Start condition and slave address generation

1. Master mode

In the master mode, the start condition and the slave address are generated as follows.

In first, check a bus free status (when SBI0SR<BB> = "0").
Set the SBI0CR1<ACK> to "1" (Acknowledge mode) and specify a slave address and a direction bit to be transmitted to the SBI0DBR.

When SBI0SR<BB> = "0", the start condition are generated by writing "1111" to SBI0CR2<MST, TRX, BB, PIN>. Subsequently to the start condition, nine clocks are output from the SCL pin. While eight clocks are output, the slave address and the direction bit which are set to the SBI0DBR. At the 9th clock, the SDA line is released and the acknowledge signal is received from the slave device.

An INTSBE interrupt request generate at the falling edge of the 9th clock. The <PIN> is cleared to "0". In the master mode, the SCL pin is pulled down to the low level while <PIN> is "0". When an interrupt request is generated, the <TRX> is changed according to the direction bit only when an acknowledge signal is returned from the slave device.

2. Slave mode

In the slave mode, the start condition and the slave address are received.

After the start condition is received from the master device, while eight clocks are output from the SCL pin, the slave address and the direction bit that are output from the master device are received.

When a GENERAL CALL or the same address as the slave address set in I2C0AR is received, the SDA line is pulled down to the low level at the 9th clock, and the acknowledge signal is output.

An INTSBE interrupt request is generated on the falling edge of the 9th clock. The <PIN> is cleared to "0". In slave mode the SCL line is pulled down to the low level while the <PIN> = "0".

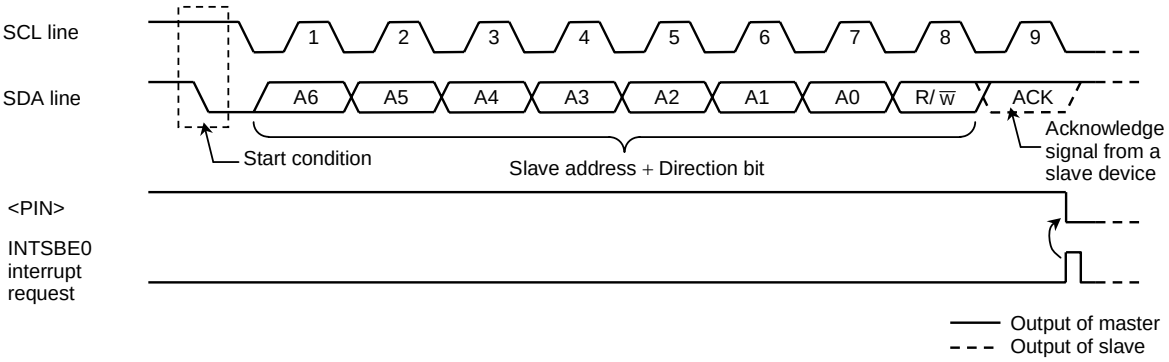

Figure 3.10.13 Start Condition and Slave Address Generation

(3) 1-word data transfer

Check the <MST> by the INTSBE0 interrupt process after the 1-word data transfer is completed, and determine whether the mode is a master or slave.

1. If <MST> = "1" (Master mode)

Check the <TRX> and determine whether the mode is a transmitter or receiver.

<u>When the <TRX> = "1" (Transmitter mode)</u>

Check the <LRB>. When <LRB> is "1", a receiver does not request data. Implement the process to generate a stop condition (Refer to 3.10.6 (4)) and terminate data transfer.

When the <LRB> is "0", the receiver is requests new data. When the next transmitted data is 8 bits, write the transmitted data to SBI0DBR. When the next transmitted data is other than 8 bits, set the <BC2:0> <ACK> and write the transmitted data to SBI0DBR. After written the data, <PIN> becomes "1", a serial clock pulse is generated for transferring a new 1-word of data from the SCL pin, and then the 1-word data is transmitted. After the data is transmitted, an INTSBE interrupt request generates. The <PIN> becomes "0" and the SCL line is pulled down to the low level. If the data to be transferred is more than one word in length, repeat the procedure from the <LRB> checking above.

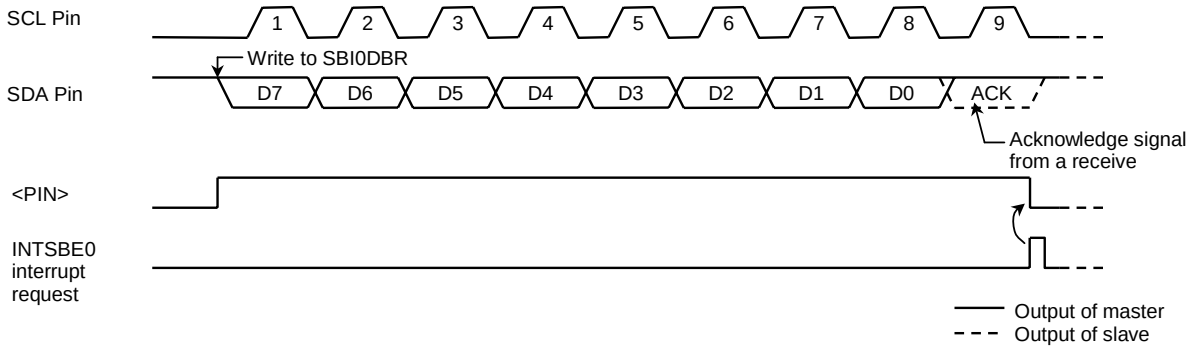

Figure 3.10.14 Example in which <BC2:0> = "000" and <ACK> = "1" (Transmitter mode)

When the <TRX> is “0” (Receiver mode)

When the next transmitted data is other than 8 bits, set <BC2:0> <ACK> and read the received data from SBI0DBR to release the SCL line (Data which is read immediately after a slave address is sent is undefined). After the data is read, <PIN> becomes “1”. Serial clock pulse for transferring new 1 word of data is defined SCL and outputs “L” level from SDA pin with acknowledge timing.

An INTSBE interrupt request then generates and the <PIN> becomes “0”, Then the TMP92CM22 pulls down the SCL pin to the low level. The TMP92CM22 outputs a clock pulse for 1 word of data transfer and the acknowledge signal each time that received data is read from the SBI0DBR.

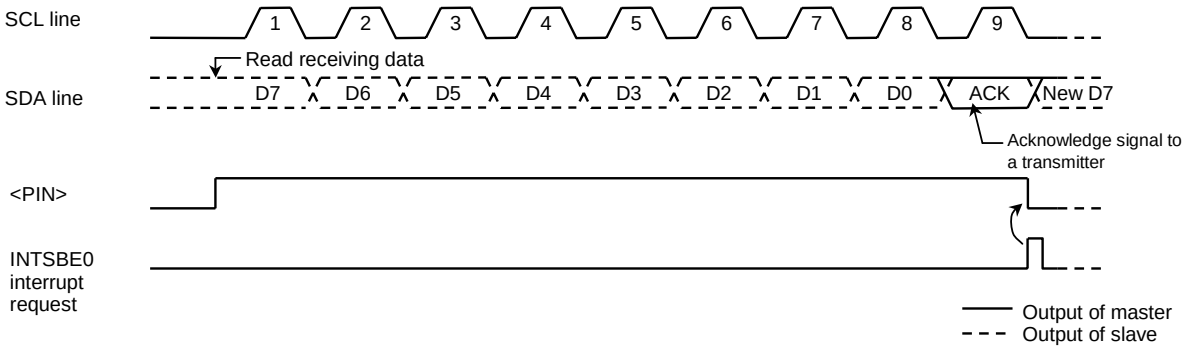

Figure 3.10.15 Example of when <BC2:0> = “000”, <ACK> = “1” (Receiver mode)

In order to terminate the transmission of data to a transmitter, clear <ACK> to “0” before reading data which is 1 word before the last data to be received. The last data word does not generate a clock pulse as the acknowledge signal. After the data has been transmitted and an interrupt request has been generated, set <BC2:0> to “001” and read the data. The TMP92CM22 generates a clock pulse for a 1-bit data transfer. Since the master device is a receiver, the SDA line on the bus remains high. The transmitter receives the high signal as an ACK signal. The receiver indicates to the transmitter that the data transfer is completed.

After the one data bit has been received and an interrupt request has been generated, the TMP92CM22 generates a stop condition (See section 3.10.6 (4)) and terminates data transfer.

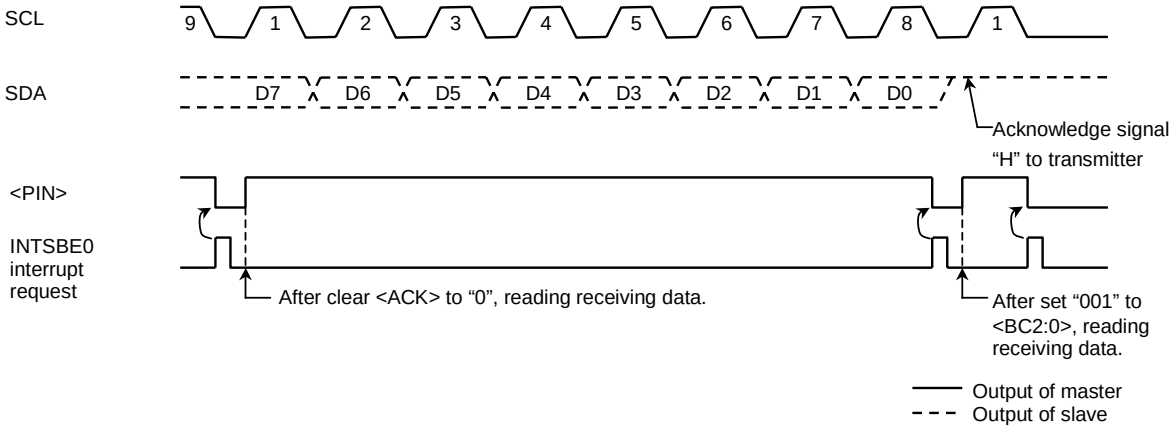

Figure 3.10.16 Termination of Data Transfer (Master receiver mode)

2. If <MST> = 0 (Slave mode)

In the slave mode the TMP92CM22 operates either in normal slave mode or in slave mode after losing arbitration.

In the slave mode, an INTSBE0 interrupt request generate when the TMP92CM22 receives a slave address or a GENERAL CALL from the master device, or when a GENERAL CALL is received and data transfer is completed, or after matching received address. In the master mode, the TMP92CM22 operates in a slave mode if it losing arbitration. An INTSBE0 interrupt request is generated when a word data transfer terminates after losing arbitration. When an INTSBE0 interrupt request is generated the <PIN> is cleared to "0" and the SCL pin is pulled down to the low level. Either reading/writing from/to the SBI0DBR or setting the <PIN> to "1" will release the SCL pin after taking t_{LOW} time.

Check the SBI0SR<AL>, <TRX>, <AAS>, and <AD0> and implements processes according to conditions listed in the next table.

Table 3.10.1 Operation in the Slave Mode

<TRX>	<AL>	<AAS>	<AD0>	Conditions	Process
1	1	1	0	The TMP92CM22 detects arbitration lost when transmitting a slave address, and receives a slave address for which the value of the direction bit sent from another master is "1".	Set the number of bits of single word to <BC2:0>, and write the transmit data to SBI0DBR.
	0	1	0	In salve receiver mode, the TMP92CM22 receives a slave address for which the value of the direction bit sent from the master is "1".	
		0	0	In salve transmitter mode, transmission of data of single word is terminated.	Check the <LRB>, If <LRB> is set to "1", set <PIN> to "1", reset "0" to <TRX> and release the bus for the receiver no request next data. If <LRB> was cleared to "0", set bit number of single word to <BC2:0> and write the transmit data to SBI0DBR for the receiver requests next data.
0	1	1	1/0	The TMP92CM22 detects arbitration lost when transmitting a slave address, and receives a slave address or GENERAL CALL for which the value of the direction bit sent from another master is "0".	Read the SBI0DBR for setting the <PIN> to "1" (Reading dummy data) or set the <PIN> to "1".
		0	0	The TMP92CM22 detects arbitration lost when transmitting a slave address or data, and transfer of word terminates.	
	0	1	1/0	In slave receiver mode the TMP92CM22 receives a slave address or GENERAL CALL for which the value of the direction bit sent from the master is "0".	
		0	1/0	In slave receiver mode the TMP92CM22 terminates receiving word data.	Set bit number of single word to <BC2:0>, and read the receiving data from SBI0DBR.

(4) Stop condition generation

When SBI0SR<BB> = 1, the sequence for generating a stop condition is started by writing “111” to SBI0CR2<MST, TRX, PIN> and “0” to SBI0CR2<BB>. Do not modify the contents of SBI0CR2<MST, TRX, PIN, BB> until a stop condition has been generated on the bus. When the bus’s SCL line has been pulled low by another device, the TMP92CM22 generates a stop condition when the other device has released the SCL line and SDA pin rising.

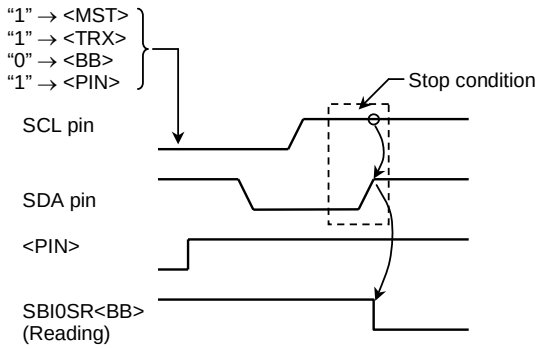

Figure 3.10.17 Stop Condition Generation (Single master)

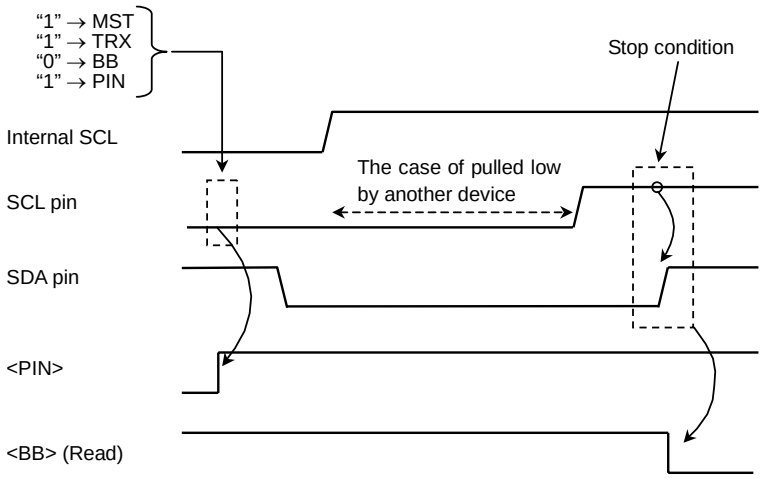

Figure 3.10.18 Stop Condition Generation (Multi master)

(5) Restart

Restart is used during data transfer between a master device and a slave device to change the data transfer direction. The following description explains how to restart when this device is in the master mode.

Clear the SBI0CR2<MST, TRX, BB> to “000” and set the SBI0CR2<PIN> to “1” to release the bus. The SDA line remains the high level and the SCL pin is released. Since a stop condition is not generated on the bus, other devices assume the bus to be in a busy state. Check the SBI0SR<BB> until it becomes “0” to check that the SCL pin of this device is released. Check the <LRB> until it becomes 1 to check that the SCL line on a bus is not pulled down to the low level by other devices. After confirming that the bus stays in a free state, generate a start condition with procedure described in 3.10.6 (2).

In order to meet setup time when restarting, take at least 4.7 μs of waiting time by software from the time of restarting to confirm that the bus is free until the time to generate the start condition.

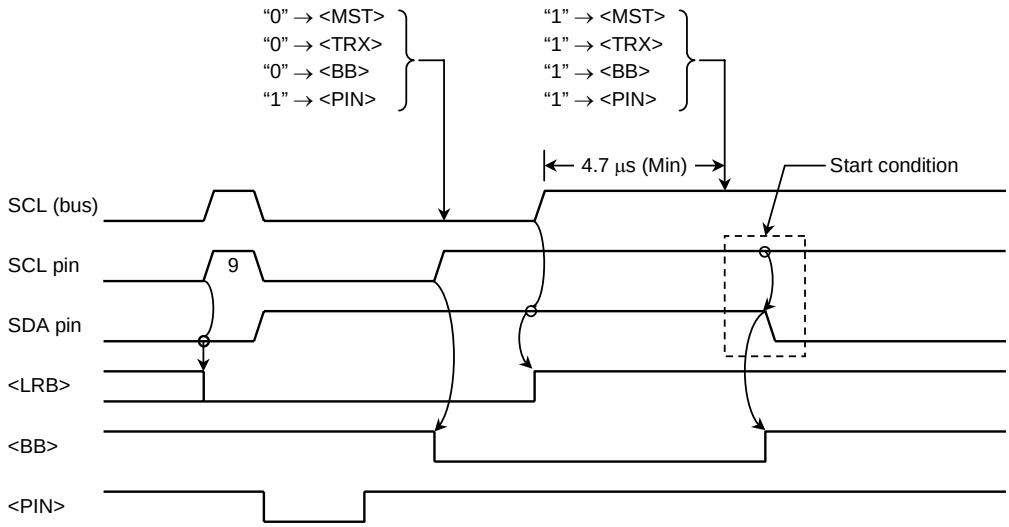

Figure 3.10.19 Timing Diagram when Restarting

3.10.7 Clocked-synchronous 8-bit SIO Mode Control

The following registers are used to control and monitor the operation status when the serial bus interface (SBI) is being operated in clocked synchronous 8-bit SIO mode.

Serial Bus Interface 0 Control Register 1

SBI0CR1 (1240H)

Read-modify-write instruction is prohibited.

	7	6	5	4	3	2	1	0
Bit symbol	SIOS	SIOINH	SIOM1	SIOM0		SCK2	SCK1	SCK0
Read/Write	W					W		W
After reset	0	0	0	0		0	0	0
Function	Transfer start 0: Stop 1: Start	Continue/ abort transfer 0: Continue transfer 1: Abort transfer	Transfer mode select 00: Transmit mode 01: (Reserved) 10: Transmit/receive mode 11: Receive mode			Serial clock selection and reset monitor		

Serial clock selection <SCK2:0> at write

000	n = 4	1.25 MHz
001	n = 5	625 kHz
010	n = 6	313 kHz
011	n = 7	156 kHz
100	n = 8	78.1 kHz
101	n = 9	39.1 kHz
110	n = 10	19.5 kHz
111	–	(External clock : SCK0)

System clock: f_{SYS}

f_{SYS} = 20 MHz (SCL output to SCK pin)

$fscl = \frac{f_{SYS}}{2^n}$ [Hz]

Transfer mode selection

00	8-bit transmit mode
01	(Reserved)
10	8-bit transmit/receive mode
11	8-bit receive mode

Continue/abort transfer

0	Continue transfer
1	Abort transfer (Automatically cleared after transfer aborted)

Indicate transfer start/stop

0	Stop
1	Start

Note: Set the transfer mode and the serial clock after setting <SIOS> to “0” and <SIOINH> to “1”.

Serial Bus Interface 0 Data Buffer Register

SBI0DBR (1241H)

Read-modify-write instruction is prohibited.

	7	6	5	4	3	2	1	0
Bit symbol	RB7/TB7	RB6/TB6	RB5/TB5	RB4/TB4	RB3/TB3	RB2/TB2	RB1/TB1	RB0/TB0
Read/Write	R (Receiver)/W (Transfer)							
After reset	Undefined							

Figure 3.10.20 Register for the SIO Mode

Serial Bus Interface 0 Control Register 2

SBI0CR2 (1243H)

Read-modify-write instruction is prohibited.

	7	6	5	4	3	2	1	0
Bit symbol					SBIM1	SBIM0	–	–
Read/Write					W		W	W
After reset					0	0	0	0
Function					Serial bus interface operation mode selection 00: Port mode 01: SIO mode 10: I^2C bus mode 11: (Reserved)		(Note 2)	(Note 2)

Note 1: Set the SBI0CR1<BC2:0> to "000" before switching to a clocked-synchronous 8-bit SIO mode.

Note 2: Please always write "00" to SBICR2<1:0>.

Serial bus interface operation mode selection

00	Port mode (Serial bus interface output disabled)
01	Clocked-synchronous 8-bit SIO mode
10	I^2C bus mode
11	(Reserved)

Serial Bus Interface 0 Status Register

SBI0SR (1243H)

	7	6	5	4	3	2	1	0
Bit symbol					SIOF	SEF		
Read/Write					R			
After reset					0	0		
Function					Serial transfer operation status monitor	Shift operation status monitor		

Serial transfer operating status monitor

0	Transfer terminated
1	Transfer in progress

Shift operation status monitor

0	Shift operation terminated
1	Shift operation in progress

Serial Bus Interface 0 Baud Rate Register 0

SBI0BR0 (1244H)

Read-modify-write instruction is prohibited.

	7	6	5	4	3	2	1	0
Bit symbol	–	–						
Read/Write	W	R/W						
After reset	0	0						
Function	Always write "0".	Always write "0".						

Note: Clocked-syncronous mode cannot operate in IDEL2 mode.

Serial Bus Interface 0 Baud Rate Register 1

SBI0BR1 (1245H)

Read-modify-write instruction is prohibited.

	7	6	5	4	3	2	1	0
Bit symbol	P4EN	–						
Read/Write	W	W						
After reset	0	0						
Function	Internal clock 0: Stop 1: Operate	Always write "0".						

Baud rate clock control

0	Stop
1	Operate

Figure 3.10.21 Register for the SIO Mode

(1) Serial Clock

1. Clock source

SBI0CR1<SCK2:0> is used to select the following functions:

Internal clock

In internal clock mode one of seven frequencies can be selected. The serial clock signal is output to the outside on the SCK pin. The SCK pin goes high when data transfer starts. When the device is writing (in transmit mode) or reading (in receive mode), data cannot follow the serial clock rate, so an automatic wait function is executed which automatically stops the serial clock and holds the next shift operation until reading or writing has been completed.

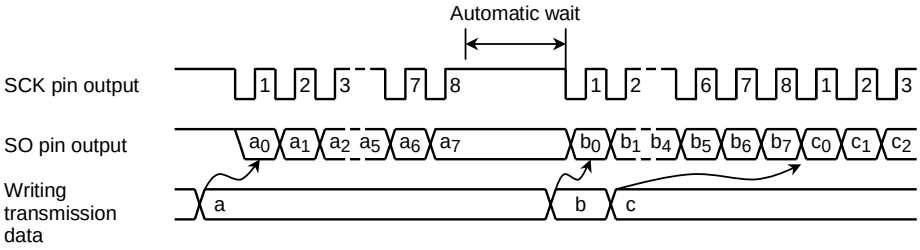

Figure 3.10.22 Automatic Wait Function

External clock (<SCK2:0> = "111")

An external clock input via the SCK pin is used as the serial clock. In order to ensure the integrity of shift operations, both the high and low-level serial clock pulse widths shown below must be maintained. The maximum data transfer frequency is 1.25 MHz (when f_{SYS} = 20 MHz).

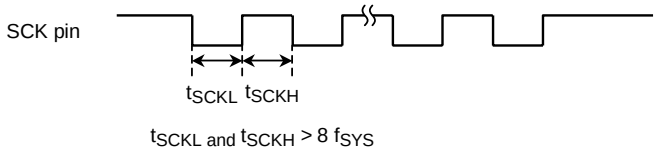

Figure 3.10.23 Maximum Data Transfer Frequency when External Clock Input

2. Shift edge

Data is transmitted on the leading edge of the clock and received on the trailing edge.

Leading edge shift

Data is shifted on the leading edge of the serial clock (on the falling edge of the SCK pin input/output).

Trailing edge shift

Data is shifted on the trailing edge of the serial clock (on the rising edge of the SCK pin input/output).

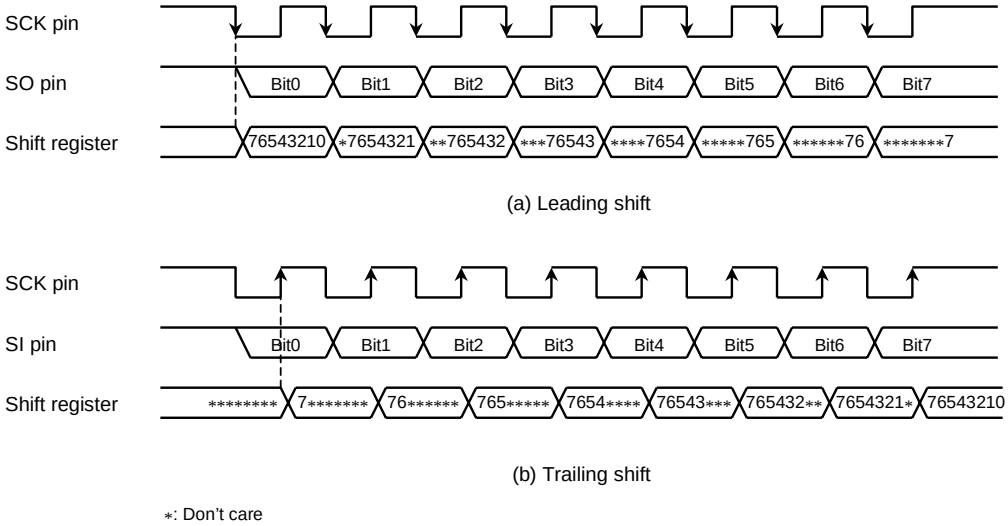

Figure 3.10.24 Shift Edge

(2) Transfer modes

The SBI0CR1<SIOM1:0> is used to select a transmit, receive or transmit/receive mode.

1. 8-bit transmit mode

Set a control register to a transmit mode and write transmission data to the SBI0DBR.

After the transmit data has been written, set the SBI0CR1<SIOS> to "1" to start data transfer. The transmitted data is transferred from the SBI0DBR to the shift register and output, starting with the least significant bit (LSB), via the SO pin and synchronized with the serial clock. When the transmission data has been transferred to the shift register, the SBI0DBR becomes empty. The INTSBE0 (Buffer empty) interrupt request is generated to request new data.

When the internal clock is used, the serial clock will stop and the automatic wait function will be initiated if new data is not loaded to the data buffer register after the specified 8-bit data is transmitted. When new transmission data is written, the automatic wait function is canceled.

When the external clock is used, data should be written to the SBI0DBR before new data is shifted. The transfer speed is determined by the maximum delay time between the time when an interrupt request is generated and the time when data is written to the SBI0DBR by the interrupt service program.

When the transmit is started, after the SBI0SR<SIOF> goes "1" output from the SO pin holds final bit of the last data until falling edge of the SCK.

For stopping data transmission, when the <SIOS> is cleared to "0" by the INTSBE0 interrupt service program or when the <SIOINH> is set to "1". When the <SIOS> is cleared to "0", the transmitted mode ends when all data is output. In order to confirm whether data is being transmitted properly by the program, the <SIOF> to be sensed. The SBI0SR<SIOF> is cleared to "0" when transmission has been completed. When the <SIOINH> is set to "1", transmitting datat stops. The <SIOF> turns "0".

When the external clock is used, it is also necessary to clear the <SIOS> to "0" before new data is shifted; otherwise, dummy data is transmitted and operation ends.

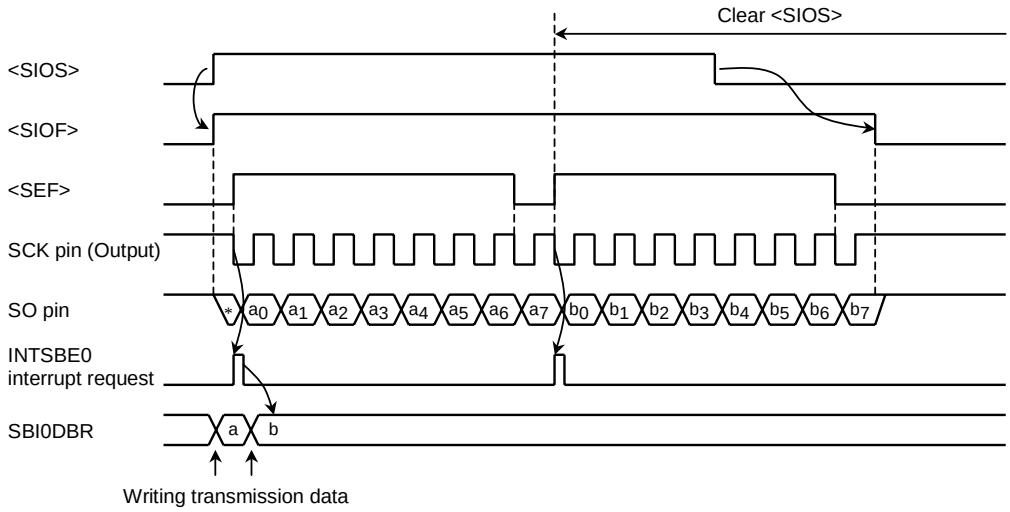

(a) Internal clock

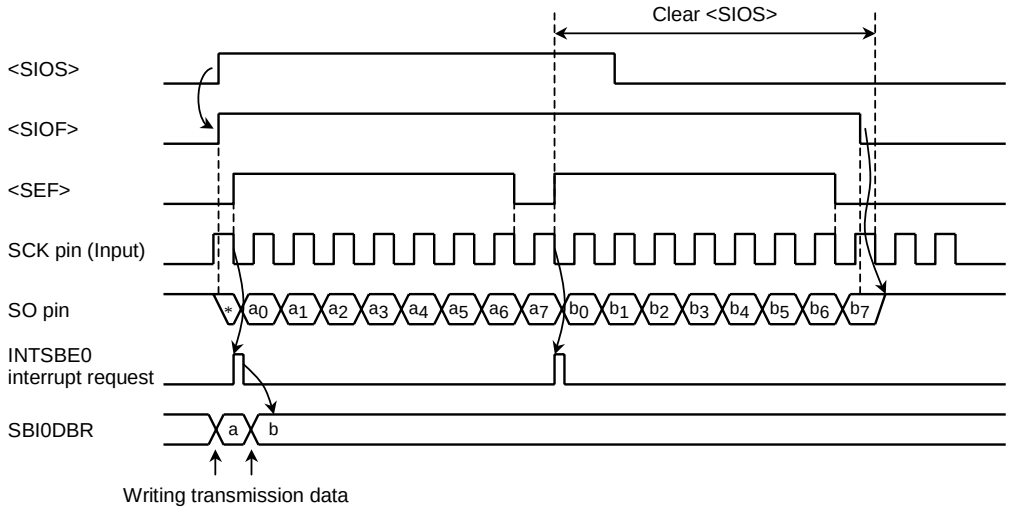

(b) External clock

Figure 3.10.25 Transmission Mode

Example: Program to stop data transmission (when an external clock is used)

```
STEST1  :  BIT   SEF, (SBI0SR)          ;  If <SEF> = 1 then loop.
           JR    NZ, STEST1
STEST2  :  BIT   0, (P9)                ;  If SCK = 0 then loop.
           JR    Z, STEST2
           LD    (SBI0CR1), 00000111B   ;  <SIOS> ← 0
```

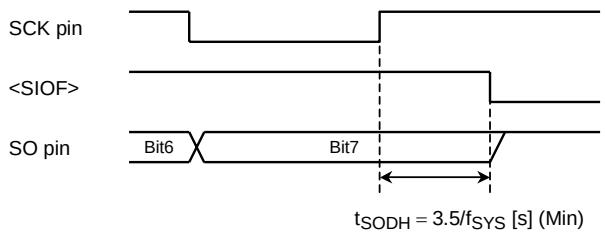

Figure 3.10.26 Transmission Data Hold Time at End Transmit

2. 8-bit receive mode

Set the control register to receive mode and set the SBI0CR1<SIOS> to "1" for switching to receive mode. Data is received into the shift register via the SI pin and synchronized with the serial clock, starting from the least significant bit (LSB). When the 8-bit data is received, the data is transferred from the shift register to the SBI0DBR. The INTSBE0 (Buffer full) interrupt request is generated to request that the received data be read. The data is then read from the SBI0DBR by the interrupt service program.

When the internal clock is used, the serial clock will stop and the automatic wait function will be in effect until the received data is read from the SBI0DBR.

When the external clock is used, since shift operation is synchronized with an external clock pulse, the received data should be read from the SBI0DBR before the next serial clock pulse is input. If the received data is not read, further data to be received is canceled. The maximum transfer speed when an external clock is used is determined by the delay time between the time when an interrupt request is generated and the time when the received data is read.

Receiving of data ends when the <SIOS> is cleared to "0" by the INTSBE0 interrupt service program or when the <SIOINH> is set to "1". If <SIOS> is cleared to "0", received data is transferred to the SBI0DBR in complete blocks. The received mode ends when the transfer is completed. In order to confirm whether data is being received properly by the program, the SBI0SR<SIOF> to be sensed. The <SIOF> is cleared to "0" when receiving is completed. When it is confirmed that receiving has been completed, the last data is read. When the <SIOINH> is set to "1", data receiving stops. The <SIOF> is cleared to "0" (The received data becomes invalid, therefore no need to read it).

Note: When the transfer mode is changed, the contents of the SBI0DBR will be lost. If the mode must be changed, conclude data receiving by clearing the <SIOS> to "0", read the last data, then change the mode.

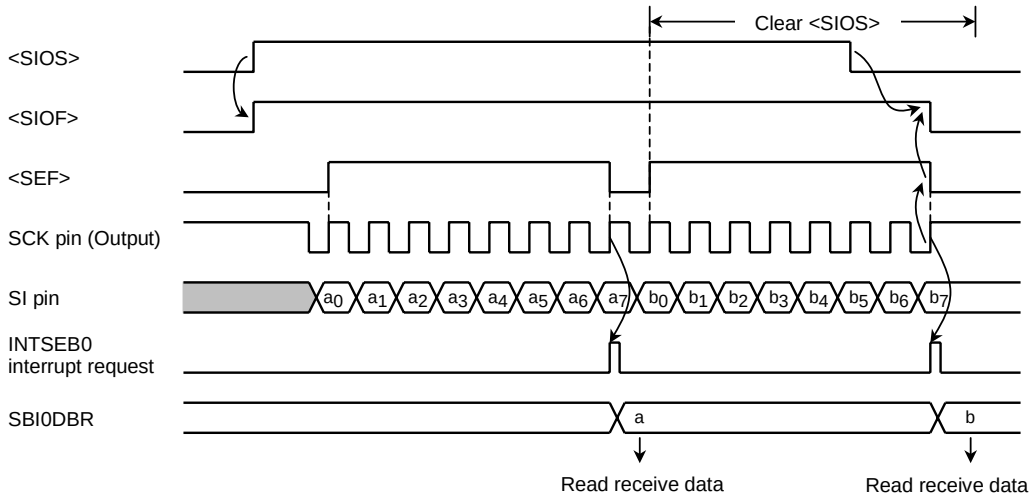

Figure 3.10.27 Receiver Mode (Example: Internal clock)

3. 8-bit transmit/receive mode

Set a control register to a transmit/receive mode and write data to the SBI0DBR. After the data is written, set the SBI0CR<SIOS> to "1" to start transmitting/receiving. When data is transmitted, the data is output from the SO pin, starting from the least significant bit (LSB) and synchronized with the leading edge of the serial clock signal. When data is received, the data is input via the SI pin on the trailing edge of the serial clock signal. 8-bit data is transferred from the shift register to the SBI0DBR and the INTSBE0 interrupt request is generated. The interrupt service program reads the received data from the data buffer register and writes the data which is to be transmitted. The SBI0DBR is used for both transmitting and receiving. Transmitted data should always be written after received data is read.

When the internal clock is used, the automatic wait function will be in effect until the received data is read and the new data is written.

When the external clock is used, since the shift operation is synchronized with the external clock, the received data is read and transmitted data is written before a new shift operation is executed. The maximum transfer speed when the external clock is used is determined by the delay time between the time when an interrupt request is generated and the time at which received data is read and transmitted data is written.

When the transmit is started, after the SBI0SR<SIOF> goes "1" output from the SO pin holds final bit of the last data until falling edge of the SCK.

Transmitting/receiving data ends when the <SIOS> is cleared to "0" by the INTSBE0 interrupt service program or when the SBI0CR1<SIOINH> is set to "1". When the <SIOS> is cleared to "0", received data is transferred to the SBI0DBR in complete blocks. The transmit/receive mode ends when the transfer is completed. In order to confirm whether data is being transmitted/received properly by the program, set the SBI0SR to be sensed. The <SIOF> is cleared to "0" when transmitting/receiving is completed. When the <SIOINH> is set to "1", data transmitting/receiving stops. The <SIOF> is then cleared to "0".

Note: When the transfer mode is changed, the contents of the SBI0DBR will be lost. If the mode must be changed, conclude data transmitting/receiving by clearing the <SIOS> to "0", read the last data, and then change the transfer mode.

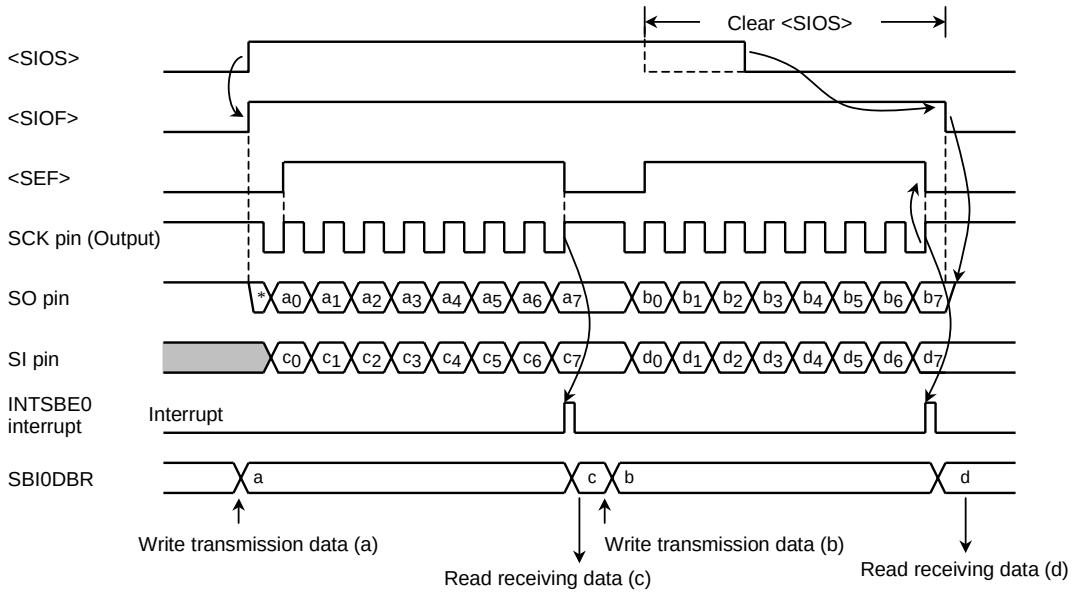

Figure 3.10.28 Transmission/Receiving Mode (when an external clock is used)

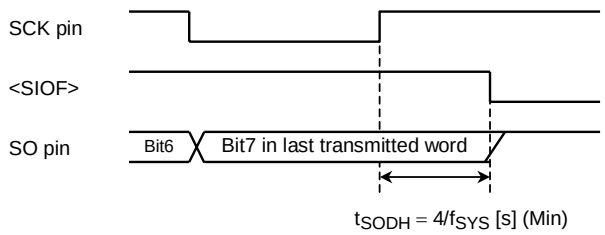

Figure 3.10.29 Transmission Data Hold Time at End of Transmission/Receiving

(Transmission/receiving mode)

3.11 Analog/Digital Converter

The TMP92CM22 incorporates a 10-bit successive approximation-type analog/digital converter (AD converter) with 8-channel analog input.

Figure 3.11.1 is a block diagram of the AD converter. The 8-channel analog input pins (AN0 to AN7) are shared with the input-only port port G so they can be used as an input port.

Note: When IDLE2, IDLE1, or STOP mode is selected, as to reduce the power, with some timings the system may enter a standby mode even though the internal comparator is still enabled. Therefore be sure to check that AD converter operations are halted before a HALT instruction is executed.

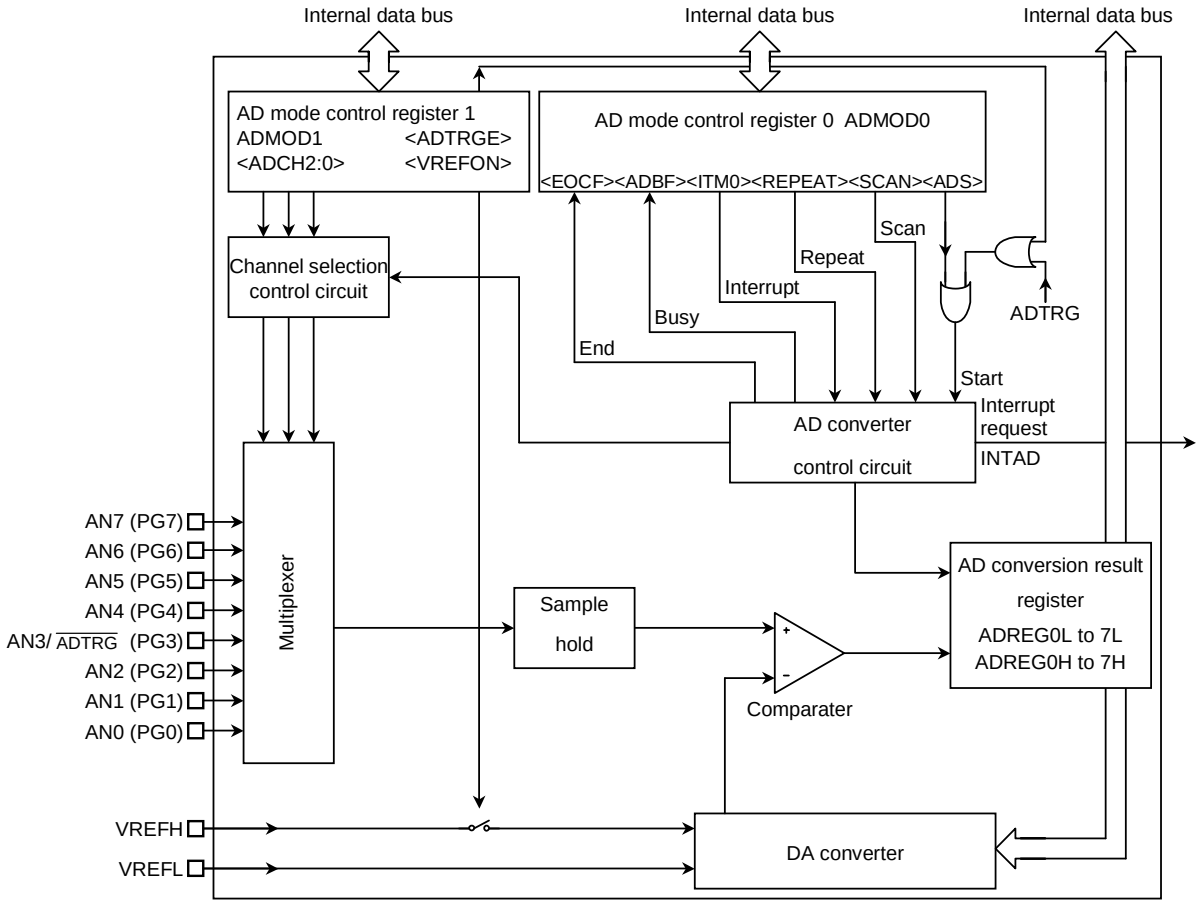

Figure 3.11.1 Block Diagram of AD Converter

3.11.1 Analog/Digital Converter Registers

The AD converter is controlled by the three AD mode control registers: ADMOD0, ADMOD1, and ADMOD2. The eight AD conversion data result registers (ADREG0H/L to ADREG7H/L) store the results of AD conversion.

Figure 3.11.2 shows the registers related to the AD converter.

AD Mode Control Register 0

ADMOD0 (12B8H)	7	6	5	4	3	2	1	0
Bit symbol	EOCF	ADBF	–	–	ITM0	REPEAT	SCAN	ADS
Read/Write	R		R/W					
After reset	0	0	0	0	0	0	0	0
Function	AD conversion end flag 0: Conversion in progress 1: Conversion complete	AD conversion busy flag 0: Conversion stopped 1: Conversion in progress	Always write "0".	Always write "0".	Interrupt specification in conversion channel fixed repeat mode 0: Every conversion 1: Every fourth conversion	Repeat mode specification 0: Single conversion 1: Repeat conversion mode	Scan mode specification 0: Conversion channel fixed mode 1: Conversion channel scan mode	AD conversion start 0: Don't care 1: Start conversion Always 0 when read.

AD conversion start

0	Don't care
1	Start AD conversion.

Note: Always read as 0.

AD scan mode setting

0	AD conversion channel fixed mode
1	AD conversion channel scan mode

AD repeat mode setting

0	AD single conversion mode
1	AD repeat conversion mode

Specify AD conversion interrupt for channel fixed repeat conversion mode

	Channel fixed repeat conversion mode <SCAN> = "0", <REPEAT> = "1"
0	Generates interrupt every conversion.
1	Generates interrupt every fourth conversion.

AD conversion busy flag

0	AD conversion stopped
1	AD conversion in progress

AD conversion in progress

0	Before or during AD conversion
1	AD conversion complete

Figure 3.11.2 Register for AD Converter

AD Mode Control Register 1

ADMOD1 (12B9H)

	7	6	5	4	3	2	1	0
Bit symbol	VREFON	I2AD	–	–	–	ADCH2	ADCH1	ADCH0
Read/Write	R/W	R/W	R/W	R/W	R/W	R/W		
After reset	0	0	0	0	0	0	0	0
Function	VREF application control 0: OFF 1: ON	IDLE2 0: Stop 1: Operate	Always write “0”.	Always write “0”.	Always write “0”.	Analog input channel selection		

Analog input channel selection

<ADCH2:0> \ <SCAN>	0 (Channel fixed)	1 (Channel scanned)
000	AN0	AN0
001	AN1	AN0 → AN1
010	AN2	AN0 → AN1 → AN2
011 (Note)	AN3	AN0 → AN1 → AN2 → AN3
100 (Note)	AN4	AN0 → AN1 → AN2 → AN3 → AN4
101 (Note)	AN5	AN0 → AN1 → AN2 → AN3 → AN4 → AN5
110 (Note)	AN6	AN0 → AN1 → AN2 → AN3 → AN4 → AN5 → AN6
111 (Note)	AN7	AN0 → AN1 → AN2 → AN3 → AN4 → AN5 → AN6 → AN7

IDLE2 control

0	Stopped
1	In operation

Control of application of reference voltage to AD converter

0	OFF
1	ON

Before starting conversion (before writing 1 to ADMOD0<ADS>), set the <VREFON> bit to 1.

AD Mode Control Register 2

ADMOD2 (12BAH)

	7	6	5	4	3	2	1	0
Bit symbol								ADTRGE
Read/Write								R/W
After reset								0
Function								AD conversion trigger start control 0: Disable 1. Enable

AD conversion start control by external trigger ($\overline{\text{ADTRG}}$ input)

0	Disabled
1	Enabled

Note: As pin AN3 also functions as the $\overline{\text{ADTRG}}$ input pin, do not set <ADCH2:0> = “011, 100,101,110,111” when using $\overline{\text{ADTRG}}$ with <ADTRGE> set to “1”.

Figure 3.11.3 Register for AD Converter

AD Conversion Result Register 0 Low

ADREG0L (12A0H)

	7	6	5	4	3	2	1	0
Bit symbol	ADR01	ADR00						ADR0RF
Read/Write	R							R
After reset	Undefined							0
Function	Stores lower 2 bits of AD conversion result							AD conversion data storage flag 1: Conversion result stored

AD Conversion Result Register 0 High

ADREG0H (12A1H)

	7	6	5	4	3	2	1	0
Bit symbol	ADR09	ADR08	ADR07	ADR06	ADR05	ADR04	ADR03	ADR02
Read/Write	R							
After reset	Undefined							
Function	Stores upper 8 bits AD conversion result.							

AD Conversion Result Register 1 Low

ADREG1L (12A2H)

	7	6	5	4	3	2	1	0
Bit symbol	ADR11	ADR10						ADR1RF
Read/Write	R							R
After reset	Undefined							0
Function	Stores lower 2 bits of AD conversion result							AD conversion data storage flag 1: Conversion result stored

AD Conversion Result Register 1 High

ADREG1H (12A3H)

	7	6	5	4	3	2	1	0
Bit symbol	ADR19	ADR18	ADR17	ADR16	ADR15	ADR14	ADR13	ADR12
Read/Write	R							
After reset	Undefined							
Function	Stores upper 8 bits of AD conversion result.							

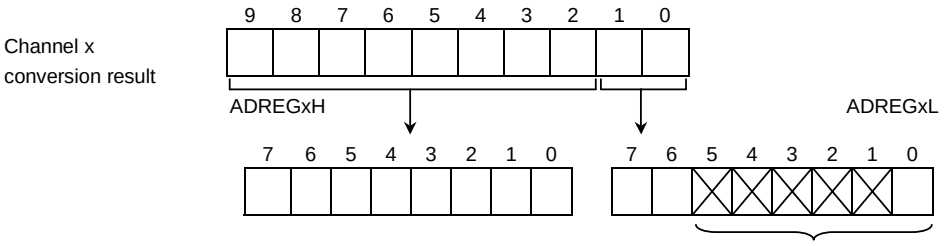

- Bits 5 to 1 are always read as 1.
- Bit0 is the AD conversion data storage flag <ADRxRF>. When the AD conversion result is stored, the flag is set to 1. When either of the registers (ADREGxH, ADREGxL) is read, the flag is cleared to 0.

Figure 3.11.4 Register for AD Converter

AD Conversion Result Register 2 Low

ADREG2L (12A4H)

	7	6	5	4	3	2	1	0
Bit symbol	ADR21	ADR20						ADR2RF
Read/Write	R							R
After reset	Undefined							0
Function	Stores lower 2 bits of AD conversion result.							AD conversion data storage flag 1: Conversion result stored

AD Conversion Result Register 2 High

ADREG2H (12A5H)

	7	6	5	4	3	2	1	0
Bit symbol	ADR29	ADR28	ADR27	ADR26	ADR25	ADR24	ADR23	ADR22
Read/Write	R							
After reset	Undefined							
Function	Stores upper 8 bits of AD conversion result.							

AD Conversion Result Register 3 Low

ADREG3L (12A6H)

	7	6	5	4	3	2	1	0
Bit symbol	ADR31	ADR30						ADR3RF
Read/Write	R							R
After reset	Undefined							0
Function	Stores lower 2 bits of AD conversion result.							AD conversion data storage flag 1:Conversion result stored

AD Conversion Result Register 3 High

ADREG3H (12A7H)

	7	6	5	4	3	2	1	0
Bit symbol	ADR39	ADR38	ADR37	ADR36	ADR35	ADR34	ADR33	ADR32
Read/Write	R							
After reset	Undefined							
Function	Stores upper 8 bits of AD conversion result.							

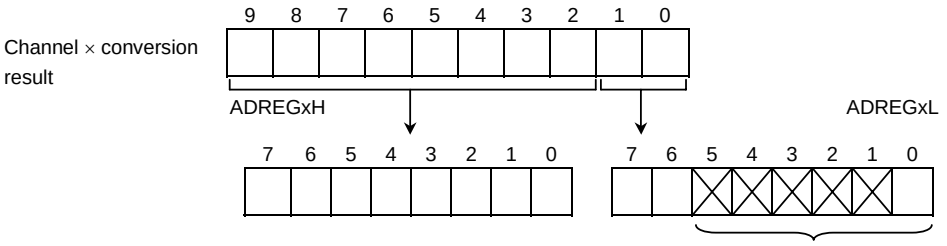

- Bits 5 to 1 are always read as 1.
- Bit0 is the AD conversion data storage flag <ADRxRF>. When the AD conversion result is stored, the flag is set to 1. When either of the registers (ADREGxH, ADREGxL) is read, the flag is cleared to 0.

Figure 3.11.5 Register for AD Converter

AD Conversion Result Register 4 Low

ADREG4L (12A8H)

	7	6	5	4	3	2	1	0
Bit symbol	ADR41	ADR40						ADR4RF
Read/Write	R							R
After reset	Undefined							0
Function	Stores lower 2 bits of AD conversion result.							AD conversion data storage flag 1: Conversion result stored

AD Conversion Result Register 4 High

ADREG4H (12A9H)

	7	6	5	4	3	2	1	0
Bit symbol	ADR49	ADR48	ADR47	ADR46	ADR45	ADR44	ADR43	ADR42
Read/Write	R							
After reset	Undefined							
Function	Stores upper 8 bits of AD conversion result.							

AD Conversion Result Register 5 Low

ADREG5L (12AAH)

	7	6	5	4	3	2	1	0
Bit symbol	ADR51	ADR50						ADR5RF
Read/Write	R							R
After reset	Undefined							0
Function	Stores lower 2 bits of AD conversion result.							AD conversion data storage flag 1: Conversion result stored

AD Conversion Result Register 5 High

ADREG5H (12ABH)

	7	6	5	4	3	2	1	0
Bit symbol	ADR59	ADR58	ADR57	ADR56	ADR55	ADR54	ADR53	ADR52
Read/Write	R							
After reset	Undefined							
Function	Stores upper 8 bits of AD conversion result.							

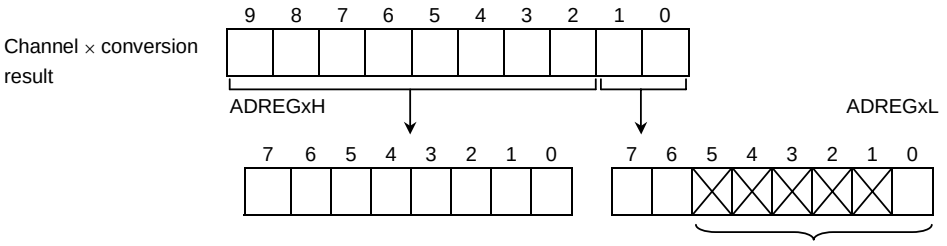

- Bits 5 to 1 are always read as 1.
- Bit0 is the AD conversion data storage flag <ADRxRF>. When the AD conversion result is stored, the flag is set to 1. When either of the registers (ADREGxH, ADREGxL) is read, the flag is cleared to 0.

Figure 3.11.6 Register for AD Converter

AD Conversion Result Register 6 Low

ADREG6L (12ACH)

	7	6	5	4	3	2	1	0
Bit symbol	ADR61	ADR60						ADR6RF
Read/Write	R							R
After reset	Undefined							0
Function	Stores lower 2 bits of AD conversion result.							AD conversion data storage flag 1:Conversion result stored

AD Conversion Result Register 6 High

ADREG6H (12ADH)

	7	6	5	4	3	2	1	0
Bit symbol	ADR69	ADR68	ADR67	ADR66	ADR65	ADR64	ADR63	ADR62
Read/Write	R							
After reset	Undefined							
Function	Stores upper 8 bits of AD conversion result.							

AD Conversion Result Register 7 Low

ADREG7L (12AEH)

	7	6	5	4	3	2	1	0
Bit symbol	ADR71	ADR70						ADR7RF
Read/Write	R							R
After reset	Undefined							0
Function	Stores lower 2 bits of AD conversion result.							AD conversion data storage flag 1: Conversion result stored

AD Conversion Result Register 7 High

ADREG7H (12AFH)

	7	6	5	4	3	2	1	0
Bit symbol	ADR79	ADR78	ADR77	ADR76	ADR75	ADR74	ADR73	ADR72
Read/Write	R							
After reset	Undefined							
Function	Stores upper 8 bits of AD conversion result.							

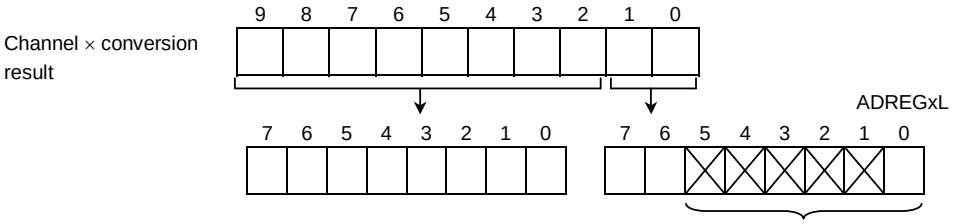

- Bits 5 to 1 are always read as 1.
- Bit0 is the AD conversion data storage flag <ADRxRF>. When the AD conversion result is stored, the flag is set to 1. When either of the registers (ADREGxH, ADREGxL) is read, the flag is cleared to 0.

Figure 3.11.7 Register for AD Converter

3.11.2 Description of Operation

(1) Analog reference voltage

A high-level analog reference voltage is applied to the VREFH pin; a low-level analog reference voltage is applied to the VREFL pin. To perform AD conversion, the reference voltage, the difference between VREFH and VREFL, is divided by 1024 using string resistance. The result of the division is then compared with the analog input voltage.

To turn off the switch between VREFH and VREFL, program a 0 to ADMOD1<VREFON> in AD mode control register 1. To start AD conversion in the OFF state, first write a 1 to ADMOD1<VREFON>, wait 3 μs until the internal reference voltage stabilizes (This is not related to f_{SYS}), then set ADMOD0<ADS> to 1.

(2) Analog input channel selection

The analog input channel selection varies depends on the operation mode of the AD converter.

- In analog input channel fixed mode (ADMOD0<SCAN> = 0)
  Setting ADMOD1<ADCH2:0> selects one of the input pins AN0 to AN7 as the input channel.
- In analog input channel scan mode (ADMOD0<SCAN> = 1)
  Setting ADMOD1<ADCH2:0> selects one of the eight scan modes.

Table 3.11.1 illustrates analog input channel selection in each operation mode.

On a reset, ADMOD0<SCAN> is set to "0" and ADMOD1<ADCH2:0> is initialized to "000". Thus pin AN0 is selected as the fixed input channel. Pins not used as analog input channels can be used as standard input port pins.

Table 3.11.1 Analog Input Channel Selection

<ADCH2:0>	Channel fixed <SCAN> = "0"	Channel scan <SCAN> = "1"
000	AN0	AN0
001	AN1	AN0 → AN1
010	AN2	AN0 → AN1 → AN2
011	AN3	AN0 → AN1 → AN2 → AN3
100	AN4	AN0 → AN1 → AN2 → AN3 → AN4
101	AN5	AN0 → AN1 → AN2 → AN3 → AN4 → AN5
110	AN6	AN0 → AN1 → AN2 → AN3 → AN4 → AN5 → AN6
111	AN7	AN0 → AN1 → AN2 → AN3 → AN4 → AN5 → AN6 → AN7

(3) Starting AD conversion

To start AD conversion, program "1" to ADMOD0<ADS> in AD mode control register 0, or ADMOD1<ADTRGE> in AD mode control register 1 and input falling edge on ADTRG pin. When AD conversion starts, the AD conversion busy flag ADMOD0<ADBF> will be set to "1", indicating that AD conversion is in progress.

(4) AD conversion modes and the AD conversion end interrupt

The four AD conversion modes are:

- Channel fixed single conversion mode
- Channel scan single conversion mode
- Channel fixed repeat conversion mode
- Channel scan repeat conversion mode

The ADMOD0<REPEAT> and ADMOD0<SCAN> settings in AD mode control register 0 determine the AD mode setting.

Completion of AD conversion triggers an INTAD AD conversion end interrupt request. Also, ADMOD0<EOCF> will be set to 1 to indicate that AD conversion has been completed.

1. Channel fixed single conversion mode

   Setting ADMOD0<REPEAT> and ADMOD0<SCAN> to "00" selects conversion channel fixed single conversion mode.

   In this mode data on one specified channel is converted once only. When the conversion has been completed, the ADMOD0<EOCF> flag is set to 1, ADMOD0<ADBF> is cleared to "0", and an INTAD interrupt request is generated.

2. Channel scan single conversion mode

   Setting ADMOD0<REPEAT> and ADMOD0<SCAN> to "01" selects conversion channel scan single conversion mode.

   In this mode data on the specified scan channels is converted once only. When scan conversion has been completed, ADMOD0<EOCF> is set to "1", ADMOD0<ADBF> is cleared to "0", and an INTAD interrupt request is generated.

3. Channel fixed repeat conversion mode

Setting ADMOD0<REPEAT> and ADMOD0<SCAN> to “10” selects conversion channel fixed repeat conversion mode.

In this mode data on one specified channel is converted repeatedly. When conversion has been completed, ADMOD0<EOCF> is set to “1” and ADMOD0<ADBF> is not cleared to “0” but held at “1”. INTAD interrupt request generation timing is determined by the setting of ADMOD0<ITM0>.

Clearing <ITM0> to “0” generates an interrupt request every time an AD conversion is completed.

Setting <ITM0> to “1” generates an interrupt request on completion of every fourth conversion.

4. Channel scan repeat conversion mode

Setting ADMOD0<REPEAT> and ADMOD0<SCAN> to “11” selects conversion channel scan repeat conversion mode.

In this mode data on the specified scan channels is converted repeatedly. When each scan conversion has been completed, ADMOD0<EOCF> is set to “1” and an INTAD interrupt request is generated. ADMOD0<ADBF> is not cleared to “0” but held at “1”.

To stop conversion in a repeat conversion mode (e.g., in cases c and d), program a "0” to ADMOD0<REPEAT>. After the current conversion has been completed, the repeat conversion mode terminates and ADMOD0<ADBF> is cleared to “0”.

Switching to a halt state (IDLE2 mode with ADMOD1<I2AD> cleared to “0”, IDLE1 mode or STOP mode) immediately stops operation of the AD converter even when AD conversion is still in progress. In repeat conversion modes (e.g., in cases c and d), when the halt is released, conversion restarts from the beginning. In single conversion modes (e.g., in cases a and b), conversion does not restart when the halt is released (The converter remains stopped).

Table 3.11.2 shows the relationship between the AD conversion modes and interrupt requests.

Table 3.11.2 Relationship between the AD Conversion Modes and Interrupt Requests AD

Mode	Interrupt Request Generation	ADMOD0		
		<ITM0>	<REPEAT>	<SCAN>
Channel fixed single conversion mode	After completion of conversion	X	0	0
Channel scan single conversion mode	After completion of scan conversion	X	0	1
Channel fixed repeat conversion mode	Every conversion	0	1	0
	Every forth conversion	1		
Channel scan repeat conversion mode	After completion of every scan conversion	X	1	1

X: Don’t care

(5) AD conversion time

132 states (6.6 μs at f_{SYS} = 20 MHz) are required for the AD conversion of one channel.

(6) Storing and reading the results of AD conversion

The AD conversion data upper and lower registers (ADREG0H/L to ADREG7H/L) store the results of AD conversion. (ADREG0H/L to ADREG7H/L are read-only registers.)

In channel fixed repeat conversion mode, the conversion results are stored successively in registers ADREG0H/L to ADREG3H/L. In other modes the AN0, AN1, AN2, AN3, AN4 AN5, AN6, AN7 conversion results are stored in ADREG0H/L, ADREG1H/L, ADREG2H/L, ADREG3H/L, ADREG4H/L, ADREG5H/L, ADREG6H/L, ADREG7H/L respectively.

Table 3.11.3 shows the correspondence between the analog input channels and the registers which are used to hold the results of AD conversion.

Table 3.11.3 Correspondence between Analog Input Channel and AD Conversion Result Register

Analog Input Channel (Port G)	AD Conversion Result Register	
	Conversion Modes Other than at Right	Channel Fixed Repeat Conversion Mode (Every 4th Conversion)
AN0	ADREG0H/L	ADREG0H/L → ADREG1H/L → ADREG2H/L → ADREG3H/L → ADREG0H/L
AN1	ADREG1H/L	
AN2	ADREG2H/L	
AN3	ADREG3H/L	
AN4	ADREG4H/L	
AN5	ADREG5H/L	
AN6	ADREG6H/L	
AN7	ADREG7H/L	

<ADRxRF>, bit0 of the AD conversion data lower register, is used as the AD conversion data storage flag. The storage flag indicates whether the AD conversion result register has been read or not. When a conversion result is stored in the AD conversion result register, the flag is set to “1”. When either of the AD conversion result registers (ADREGxH or ADREGxL) is read, the flag is cleared to “0”.

Reading the AD conversion result also clears the AD conversion end flag ADMOD0<EOCF> to “0”.

Example:

1. Convert the analog input voltage on the AN3 pin and write the result, to memory address 0800H using the AD interrupt (INTAD) processing routine.

Setting of main routine

		7	6	5	4	3	2	1	0	
INTE0AD	←	X	1	0	0	–	–	–	–	Enable INTAD and set it to interrupt level 4.
ADMOD1	←	1	1	0	0	0	0	1	1	Set pin AN3 to the analog input channel.
ADMOD0	←	X	X	0	0	0	0	0	1	Start conversion in channel fixed single conversion mode.

Interrupt routine processing example

WA	←	ADREG3	Read value of ADREG3L, ADREG3H to general purpose register WA (16 bits).
WA		> > 6	Shift contents read into WA six times to right and zero-fill upper bits.
(0800H)	←	WA	Write contents of WA to memory address 0800H.

2. Converts repeatedly the analog input voltages on the three pins AN0, AN1, and AN2, using channel scan repeat conversion mode.

INTE0AD	←	X	0	0	0	–	–	–	–	Disable INTAD.
ADMOD1	←	1	1	0	0	0	0	1	0	Set pins AN0 to AN2 to be the analog input channels.
ADMOD0	←	X	X	0	0	0	1	1	1	Start conversion in channel scan repeat conversion mode.

X : Don't care, – : No change

3.12 Watchdog Timer (Runaway detection timer)

The TMP92CM22 contains a watchdog timer of runaway detecting.

The watchdog timer (WDT) is used to return the CPU to the normal state when it detects that the CPU has started to malfunction (Runaway) due to causes such as noise. When the watchdog timer detects a malfunction, it generates a non-maskable interrupt INTWD to notify the CPU of the malfunction.

Connecting the watchdog timer output to the reset pin internally forces a reset.

3.12.1 Configuration

Figure 3.12.1 is a block diagram of the watchdog timer (WDT).

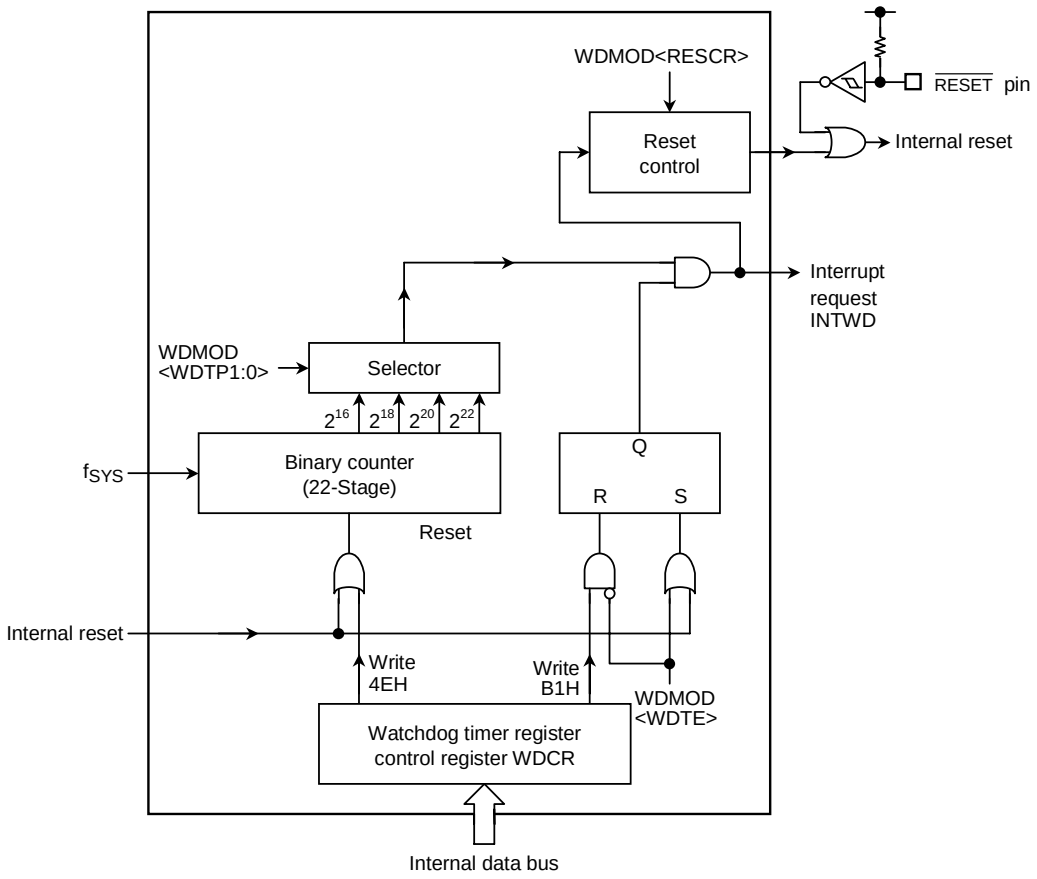

Figure 3.12.1 Block Diagram of Watchdog Timer

Note: It needs to care designing total machine set, because WDT can't operate completely by external noise.

The watchdog timer consists of a 22-stage binary counter which uses the clock f_{SYS} as the input clock. The binary counter can output $2^{16}/f_{SYS}$, $2^{18}/f_{SYS}$, $2^{20}/f_{SYS}$, and $2^{22}/f_{SYS}$. Selecting one of the outputs using WDMOD<WDTP1:0> generates a watchdog timer interrupt when an overflow generate.

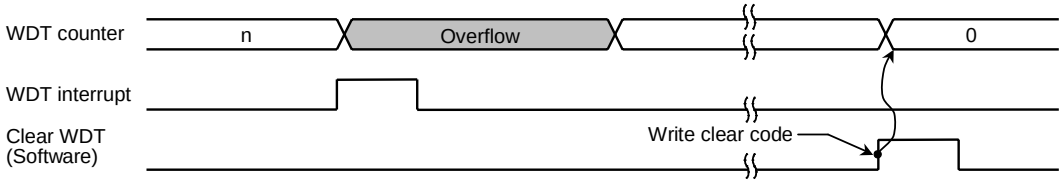

Figure 3.12.2 Normal Mode

The runaway detection result can also be connected to the reset pin internally.
In this case, the reset time will be between 44 to 58 system clocks (2.2 to 2.9 μs at f_{SYS} = 20 MHz) as shown in Figure 3.12.3.

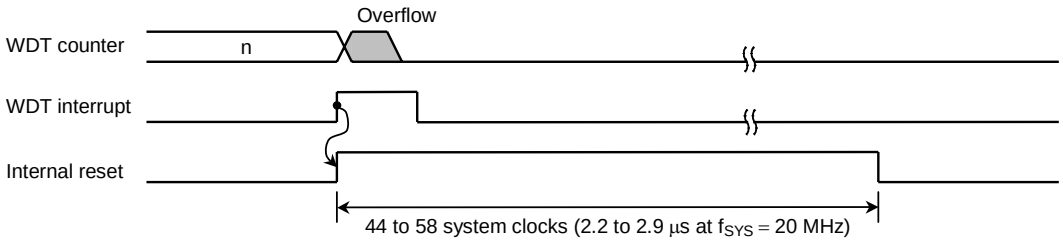

Figure 3.12.3 Reset Mode

3.12.2 Control Registers

The watchdog timer WDT is controlled by two control registers WDMOD and WDCR .

(1) Watchdog timer mode register (WDMOD)

1. Setting the detection time for the watchdog timer in <WDTP1:0>

   This 2-bit register is used for setting the watchdog timer interrupt time used when detecting runaway. On a reset this register is initialized to WDMOD<WDTP1:0> = 00.

   The detection times for WDT is $2^{16}/f_{SYS}$ [s]. (The number of system clocks is approximately 65,536.)

2. Watchdog timer enable/disable control register <WDTE>

   At reset, the WDMOD<WDTE> is initialized to 1, enabling the watchdog timer.

   To disable the watchdog timer, it is necessary to set this bit to 0 and to write the disable code (B1H) to the watchdog timer control register WDCR. This makes it difficult for the watchdog timer to be disabled by runaway.

   However, it is possible to return the watchdog timer from the disabled state to the enabled state merely by setting <WDTE> to "1".

3. Watchdog timer out reset connection <RESCR>

   This register is used to connect the output of the watchdog timer with the RESET terminal internally. Since WDMOD<RESCR> is initialized to "0" at reset, a reset by the watchdog timer will not be performed.

(2) Watchdog timer control register (WDCR)

This register is used to disable and clear the binary counter for the watchdog timer.

- Disable control

The watchdog timer can be disabled by clearing WDMOD<WDTE> to 0 and then writing the disable code (B1H) to the WDCR register.

WDMOD	←	0 – – – – – – –	Clear WDMOD<WDTE> to "0".
WDCR	←	1 0 1 1 0 0 0 1	Write the disable code (B1H).

- Enable control

Set WDMOD<WDTE> to "1".

- Watchdog timer clear control

To clear the binary counter and cause counting to resume, write the clear code (4EH) to the WDCR register.

WDCR	←	0 1 0 0 1 1 1 0	Write the clear code (4EH).

WDMOD (1300H)

	7	6	5	4	3	2	1	0
Bit symbol	WDTE	WDTP1	WDTP0		–	I2WDT	RESCR	–
Read/Write	R/W				R/W			
After reset	1	0	0		0	0	0	0
Function	WDT control 1: Enable	WDT detection time 00: $2^1/f_{SYS}$ 01: $2^{18}/f_{SYS}$ 10: $2^{20}/f_{SYS}$ 11: $2^{22}/f_{SYS}$			Always write “0”.	IDLE2 0: Stop 1: Operation	1: Internally connects WDT out to the reset pin.	Always write “0”.

Watchdog timer out control

0	–
1	Connects WDT out to a reset

IDLE2 control

0	Stop
1	Operation

Watchdog timer detection time

00	$2^{16}/f_{SYS}$ (Approximately 3.3 ms at f_{SYS} = 20 MHz)
01	$2^{18}/f_{SYS}$ (Approximately 13.1 ms at f_{SYS} = 20 MHz)
10	$2^{20}/f_{SYS}$ (Approximately 52.4 ms at f_{SYS} = 20 MHz)
11	$2^{22}/f_{SYS}$ (Approximately 209.7 ms at f_{SYS} = 20 MHz)

Watchdog timer enable/disable control

0	Stop
1	Enable

Figure 3.12.4 Watchdog Timer Mode Register

WDCR (1301H)

Read-modify-write instruction is prohibited

	7	6	5	4	3	2	1	0
Bit symbol	–							
Read/Write	W							
After reset	–							
Function	B1H: WDT disasble code 4EH: WDT clear code							

WDT disable/clear control

B1H	Disasble code
4EH	Clear code
Others	–

Figure 3.12.5 Watchdog Timer Control Register

3.12.3 Operation

The watchdog timer generates an INTWD interrupt when the detection time set in the WDMOD<WDTP1:0> has elapsed. The watchdog timer must be zero-cleared in software before an INTWD interrupt generated. If the CPU malfunctions (e.g., if runaway occurs) due to causes such as noise, but does not execute the instruction used to clear the binary counter, the binary counter will overflow and an INTWD interrupt will be generated. The CPU will detect malfunction (Runaway) due to the INTWD interrupt and in this case it is possible to return to the CPU to normal operation by means of an anti-mulfunction program.

The watchdog timer begins operating immediately on release of the watchdog timer reset.

The watchdog timer is reset and halted in IDLE1 or STOP modes. The watchdog counter continues counting during bus release (when $\overline{\text{BUSAK}}$ goes low).

When the device is in IDLE2 mode, the operation of WDT depends on the WDMOD<I2WDT> setting. Ensure that WDMOD<I2WDT> is set before the device enters IDLE2 mode.

Example: 1. Clear the binary counter.

WDCR	←	0 1 0 0 1 1 1 0	Write the clear code (4EH).

2. Set the watchdog timer detection time to $2^{18}/f_{SYS}$.

WDMOD	←	1 0 1 X – – – –

3. Disable the watchdog timer.

WDMOD	←	0 – – X – – – –	Clear <WDTE> bit to 0.
WDCR	←	1 0 1 1 0 0 0 1	Write the disable code (B1H).

4. Electrical Characteristics

4.1 Maximum Ratings

Parameter	Symbol	Rating	Unit
Power supply voltage	Vcc	−0.5 to 4.0	V
Input voltage	VIN	−0.5 to Vcc + 0.5	
Output current (1 pin)	IOL	2	mA
Output current (1 pin)	IOH	−2	
Output current (Total)	ΣIOL	80	
Output current (Total)	ΣIOH	−80	
Power dissipation (Ta = 85°C)	PD	600	mW
Soldering temperature (10 s)	TSOLDER	260	°C
Storage temperature	TSTG	−65 to 150	
Operation temperature	TOPR	−40 to 85	

Note: The maximum ratings are rated values that must not be exceeded during operation, even for an instant. Any one of the ratings must not be exceeded. If any maximum rating is exceeded, a device may break down or its performance may be degraded, causing it to catch fire or explode resulting in injury to the user. Thus, when designing products that include this device, ensure that no maximum rating value will ever be exceeded.

Point of note about solderability of lead free products (attach “G” to package name)

Test parameter	Test condition	Note
Solderability	(1) Use of Sn-63Pb solder Bath Solder bath temperature = 230°C, Dipping time = 5 seconds The number of times = one, Use of R-type flux	Pass: solderability rate until forming ≥95%
	(2) Use of Sn-3.0Ag-0.5Cu solder bath Solder bath temperature =245°C, Dipping time = 5 seconds The number of times = one, Use of R-type flux (use of lead free)	

DC Characteristics (1/2)

Vcc = 3.3 ± 0.3 V/fc = 4 to 40 MHz/Ta = −40 to 85°C

Parameter	Symbol	Condition	Min	Typ.	Max	Unit
Power supply voltage (DVCC = AVCC) (DVSS = AVSS = 0 V)	V_{CC}	fc = 4 to 40 MHz (f_{SYS} = 125 kHz to 20 MHz)	3.0		3.6	V
Input low voltage P00 to P07 (D0 to D7) P10 to P17 (D8 to D15)	V_{IL0}		−0.3		0.6	V
Input low voltage P40 to P47 P50 to P57 P60 to P67 P76 PD2, PD3 PF0, PF3, PF6, PF7 PG0 to PG7	V_{IL1}				0.3 × VCC	
Input low voltage P90 to P92 PA0 to PA2, PA7 PC0, PC1, PC3, PC5, PC6 PD0, PD1 PF1, PF2, PF4, PF5 RESET, $\overline{NMI}$	V_{IL2}				0.25 × VCC	
Input low voltage AM0, AM1	V_{IL3}				0.3	
Input low voltage X1	V_{IL4}				0.2 × VCC	
Input high voltage P00 to P07 (D0 to D7) P10 to P17 (D8 to D15)	V_{IH0}		2.0		VCC + 0.3	V
Input high voltage P40 to P47 P50 to P57 P60 to P67 P76 PD2, PD3 PF0, PF3, PF6, PF7 PG0 to PG7	V_{IH1}		0.7 × VCC			
Input high voltage P90 to P92 PA0 to PA2, PA7 PC0, PC1, PC3, PC5, PC6 PD0, PD1 PF1, PF2, PF4, PF5 RESET, $\overline{NMI}$	V_{IH2}		0.75 × VCC			
Input high voltage AM0, AM1	V_{IH3}		VCC − 0.3			
Input high voltage X1	V_{IH4}		0.8 × VCC			

DC Characteristics (2/2)

Vcc = 3.3 ± 0.3 V/fc = 4 to 40 MHz/Ta = –40 to 85°C

Parameter	Symbol	Condition	Min	Typ.	Max	Unit
Output low voltage	V_{OL}	IOL = 1.6 mA			0.45	V
Output high voltage	V_{OH}	IOH = –400 μA	2.4			
Input leakage current	I_{LI}	0.0 ≤ Vin ≤ VCC		0.02	5	μA
Output leakage current	I_{LO}	0.2 ≤ Vin ≤ VCC – 0.2		0.05	10	
Power down voltage (at STOP, RAM backup)	V_{STOP}	VIL2 = 0.2 × Vcc, VIH2 = 0.8 × Vcc	1.8		3.6	V
$\overline{RESET}$ pull-up resistor	R_{RST}		100		400	kΩ
Programmable pull-up resistor	R_{KH}					
Pin capacitance	C_{IO}	fc = 1 MHz			10	pF
Schmitt width	V_{TH}	P90 to P92 PA0 to PA2, PA7 PC0, PC1, PC3, PC5, PC6 PD0, PD1 PF1, PF2, PF4, PF5 $\overline{RESET}$, $\overline{NMI}$	0.4	1.0		V
NORMAL	ICC	V_{CC} = 3.6 V, X1 = 40 MHz (Internal 20 MHz)		30	42	mA
IDLE2 mode	ICC_{IDLE2}			17	25	
IDLE1 mode	ICC_{IDLE1}			3	5	
STOP	ICC_{STOP}	Vcc = 3.6 V		1	100	μA

4.2 AC Characteristics

4.2.1 Basis Bus Cycle

Read cycle

Vcc = 3.3 ± 0.3 V/fc = 4 to 40 MHz/Ta = –40 to 85°C

No.	Parameter	Symbol	Min	Max	f_{SYS} = 20 MHz (fc = 40 MHz)	f_{SYS} = 125 kHz (fc = 4 MHz)	Unit
1	OSC period (X1/X2)	t_{OSC}	25	250	25	250	ns
2	System clock period (= T)	t_{CYC}	50	8000	50	8000	ns
3	CLKOUT low width	t_{CL}	0.5T – 15		10	3985	ns
4	CLKOUT high width	t_{CH}	0.5T – 15		10	3985	ns
5-1	A0 to A23 valid → D0 to D15 input at 0 waits	t_{AD}		2.0T – 30	70	15970	ns
5-2	A0 to A23 valid → D0 to D15 input at 1 wait	t_{AD3}		3.0T – 30	120	23970	ns
6-1	$\overline{RD}$ fall → D0 to D15 input at 0 waits	t_{RD}		1.5T – 30	45	11970	ns
6-2	$\overline{RD}$ fall → D0 to D15 input at 1 wait	t_{RD3}		2.5T – 30	95	19970	ns
7-1	$\overline{RD}$ low width at 0 waits	t_{RR}	1.5T – 20		55	11980	ns
7-2	$\overline{RD}$ low width at 1 wait	t_{RR3}	2.5T – 20		105	19980	ns
8	A0 to A23 valid → $\overline{RD}$ fall	t_{AR}	0.5T – 15		10	3985	ns
9	$\overline{RD}$ fall → CLKOUT fall	t_{RK}	0.5T – 20		5	3980	ns
10	A0 to A23 valid → D0 to D15 hold	t_{HA}	0		0	0	ns
11	$\overline{RD}$ rise → D0 to D15 hold	t_{HR}	0		0	0	ns
12	$\overline{WAIT}$ setup time	t_{TK}	15		15	15	ns
13	$\overline{WAIT}$ hold time	t_{KT}	5		5	5	ns

Write cycle

Vcc = 3.3 ± 0.3 V/fc = 4 to 40 MHz/Ta = –40 to 85°C

No.	Parameter	Symbol	Min	Max	f_{SYS} = 20 MHz (fc = 40 MHz)	f_{SYS} = 125 kHz (fc = 4 MHz)	Unit
1	OSC period (X1/X2)	t_{OSC}	25	250	25	250	ns
2	System clock period (= T)	t_{CYC}	50	8000	50	8000	ns
3	CLKOUT low width	t_{CL}	0.5T – 15		10	3985	ns
4	CLKOUT high width	t_{CH}	0.5T – 15		10	3985	ns
5-1	D0 to D15 valid → $\overline{WRxx}$ rise at 0 waits	t_{DW}	1.25T – 35		28	9965	ns
5-2	D0 to D15 valid → $\overline{WRxx}$ rise at 1 wait	t_{DW3}	2.25T – 35		78	17965	ns
6-1	$\overline{WRxx}$ low width at 0 waits	t_{WW}	1.25T – 30		33	9970	ns
6-2	$\overline{WRxx}$ low width at 1 wait	t_{WW3}	2.25T – 30		83	17970	ns
7	A0 to A23 valid → $\overline{WR}$ fall	t_{AW}	0.5T – 15		10	3985	ns
8	$\overline{WRxx}$ fall → CLKOUT fall	t_{WK}	0.5T – 20		5	3980	ns
9	$\overline{WRxx}$ rise → A0 to A23 hold	t_{WA}	0.25T – 5		8	1995	ns
10	$\overline{WRxx}$ rise → D0 to D15 hold	t_{WD}	0.25T – 3		10	1997	ns
11	$\overline{WAIT}$ setup time	t_{TK}	15		15	15	ns
12	$\overline{WAIT}$ hold time	t_{KT}	5		5	5	ns
13	$\overline{RD}$ rise → D0 to D15 output	t_{RDO}	0.5T – 5		20	3995	ns

AC condition

- Output : High = 0.7Vcc, Low = 0.3Vcc, C_L = 50 pF
- Input : High = 0.9Vcc, Low = 0.1Vcc

(1) Read cycle (0 waits, fc = f_{OSCH}, f_{FPH} = fc/1)

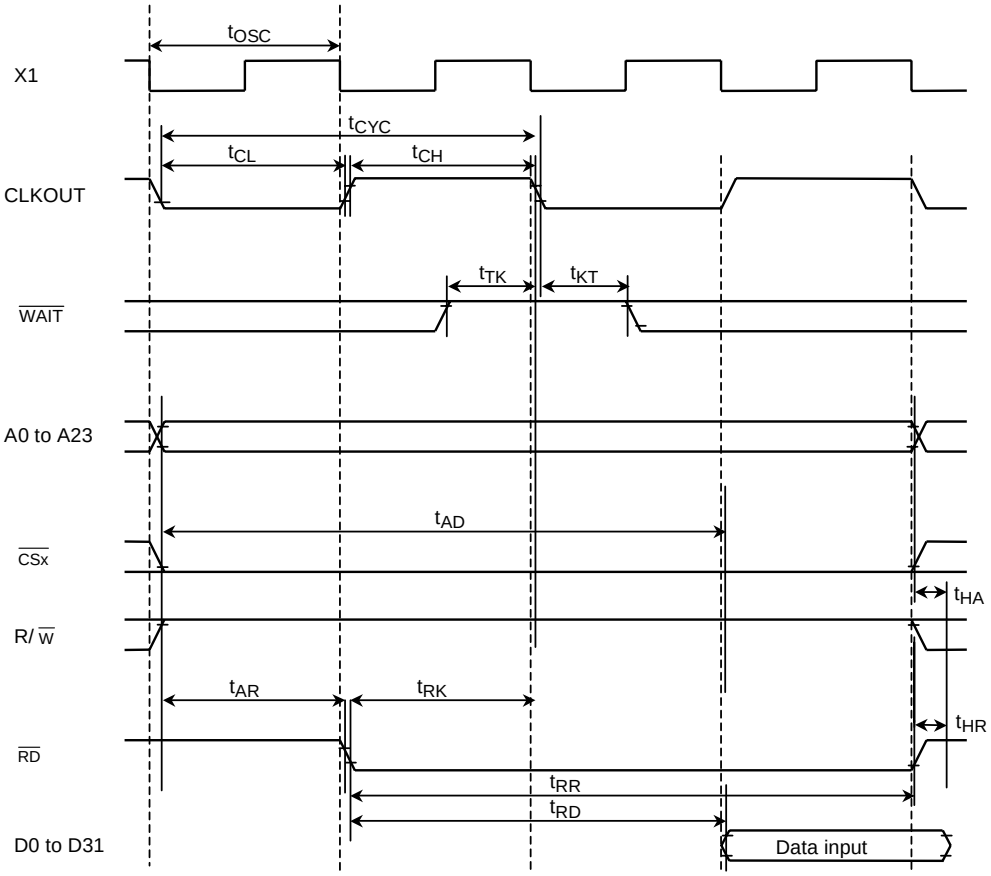

Note: The phase relation between X1 input signal and the other signals is unsettled.
The timing chart above is an example.

(2) Write cycle (0 waits, fc = f_{OSCH}, f_{FPH} = fc/1)

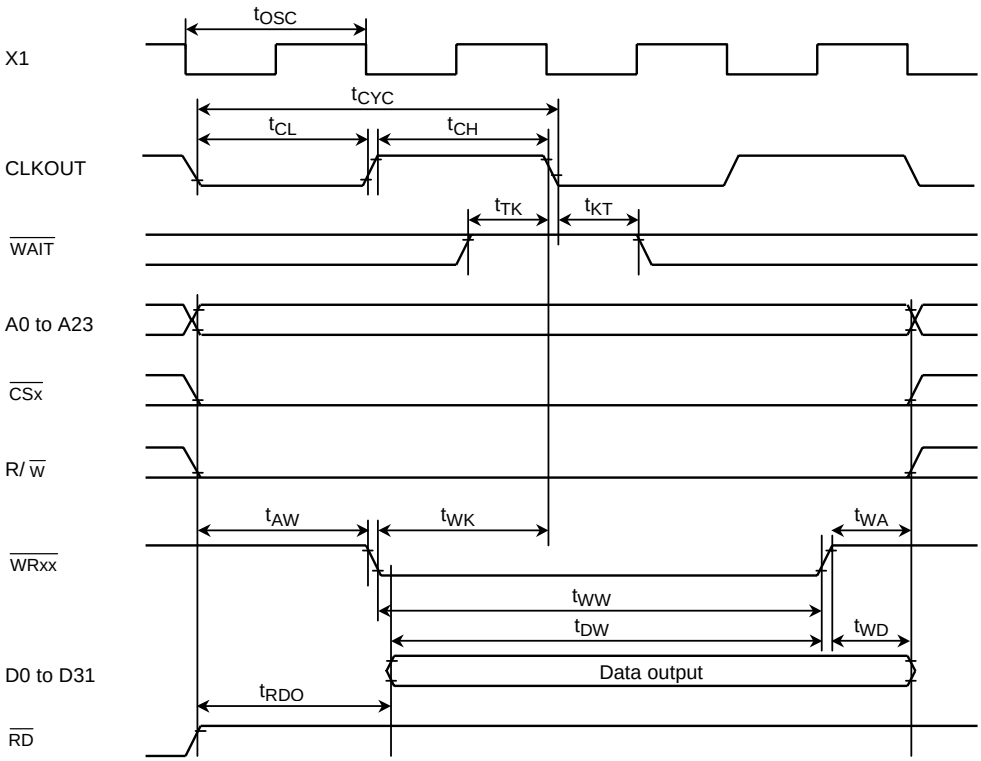

Note: The phase relation between X1 input signal and the other signals is unsettled.
The timing chart above is an example.

(3) Read cycle (1 wait)

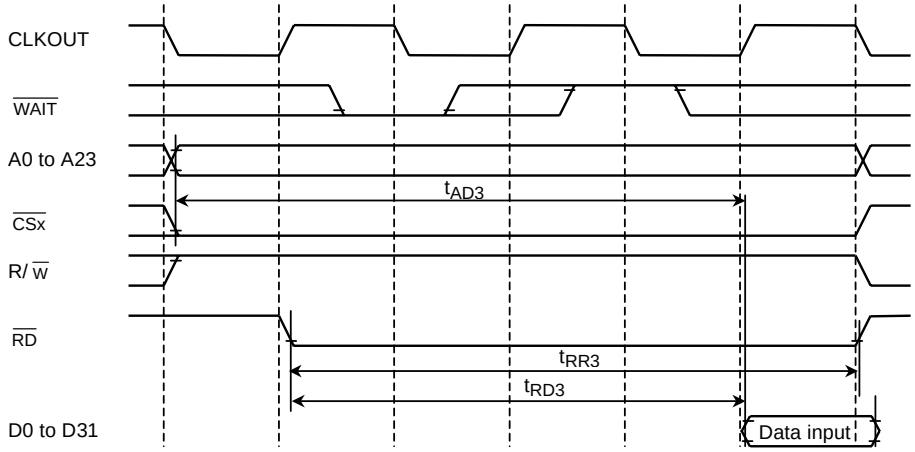

(4) Write cycle (1 wait)

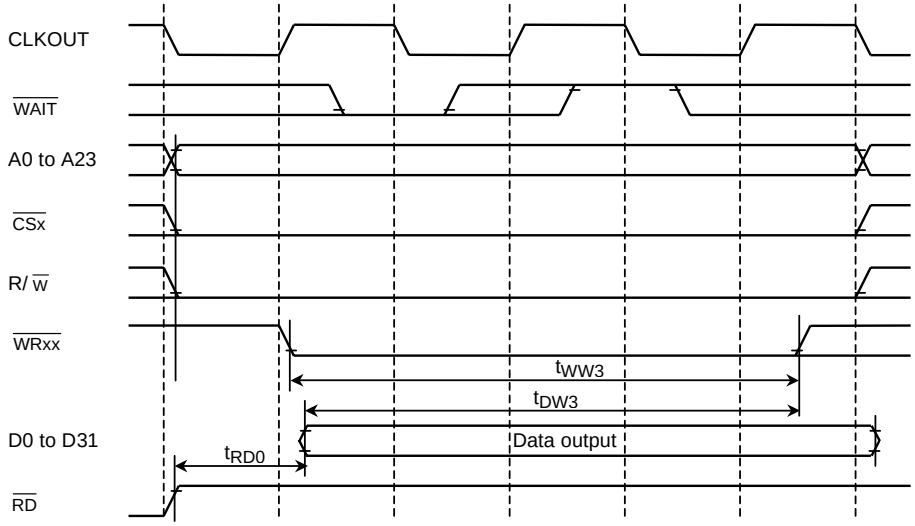

4.2.2 Page ROM Read Cycle

(1) 3-2-2-2 mode

Vcc = 3.3 ± 0.3 V/fc = 4 to 40 MHz/Ta = –40 to 85°C

No.	Parameter	Symbol	Min	Max	f_{SYS} = 20 MHz (fc = 40 MHz)	f_{SYS} = 125 kHz (fc = 4 MHz)	Unit
1	System clock period (= T)	t_{CYC}	50	8000	50	8000	ns
2	A0, A1 → D0 to D31 input	t_{AD2}		2.0T – 50	50	15950	ns
3	A2 to A23 → D0 to D31 input	t_{AD3}		3.0T – 50	100	23950	ns
4	RD falling → D0 to D31 input	t_{RD3}		2.5T – 45	80	19955	ns
5	A0 to A23 invalid → D0 to D31 hold	t_{HA}	0		0	0	ns
6	$\overline{RD}$ rising → D0 to D31 hold	t_{HR}	0		0	0	ns

AC condition

- Output: High = 0.7 Vcc, Low = 0.3 Vcc, C_L = 50 pF
- Input: High = 0.9 Vcc, Low = 0.1 Vcc

(2) Page ROM read cycle (3-2-2-2 mode)

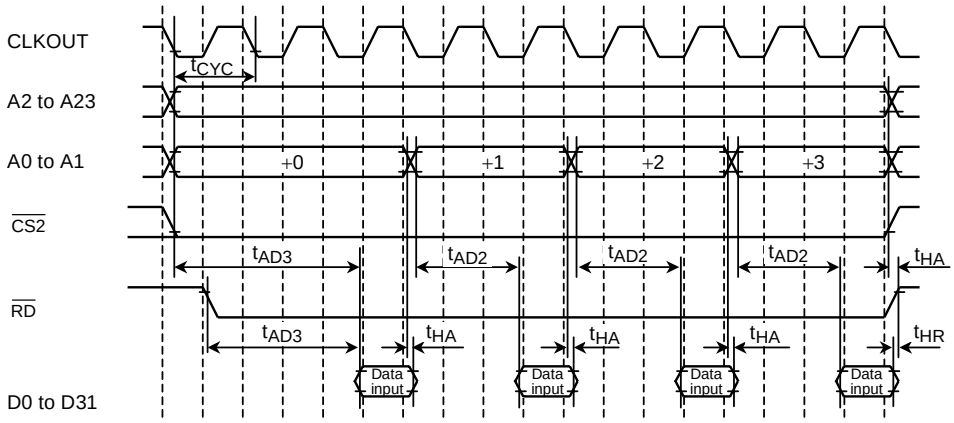

4.3 AD Conversion Characteristics

Parameter	Symbol	Min	Typ.	Max	Unit
Analog reference voltage (+)	V_{REFH}	VCC − 0.2	VCC	VCC	V
Analog reference voltage (−)	V_{REFL}	VSS	VSS	VSS + 0.2	
AD converter power supply voltage	A_{VCC}	VCC	VCC	VCC	
AD converter power supply ground	A_{VSS}	VSS	VSS	VSS	
Analog input voltage	A_{VIN}	VREFL		VREFH	
Analog current for analog reference voltage <VREFON> = 1	I_{REF}		1.0	1.2	mA
Analog current for analog reference voltage <VREFON> = 0			0.02	5.0	UA
Total error (Include quantize error of ± 0.5 LSB)	E_T		±1.0	±4.0	LSB

4.4 Event Counter (TA0IN, TB1IN0, and TB1IN1)

Parameter	Symbol	Variable		f_{SYS} = 20 MHz (fc = 40 MHz)		f_{SYS} = 125 kHz (fc = 4 MHz)		Unit
		MIN	MAX	MIN	MAX	MIN	MAX	
Clock cycle	T_{VCK}	8X + 100		500		64100		ns
Low-level clock width	T_{VCKL}	4X + 40		240		32040		ns
High-level clock width	T_{VCKH}	4X + 40		240		32040		ns

Note: Symbol “x” in the above table means the period of clock “f_{SYS}”, it’s same period of the system clock “f_{SYS}” for CPU core. The period of f_{SYS} depends on the clock gear setting or changing high-speed oscillator/low-speed oscillator and so on.

4.5 Serial Channel Timing (I/O interface mode)

Note: Symbol "X" in the following table means the period of clock "f_{SYS}", it's same period of the system clock "f_{SYS}" for CPU core. The period of f_{SYS} depends on the clock gear setting or changing high-speed oscillator/low-speed oscillator and so on.

(1) SCLK input mode

Parameter	Symbol	Variable		f_{SYS} = 20 MHz (fc = 40 MHz)		f_{SYS} = 125 kHz (fc = 4 MHz)		Unit
		Min	Max	Min	Max	Min	Max	
SCLK period	t_{SCY}	16X		0.8		128		μs
Output data → SCLK rising/falling*	t_{OSS}	$t_{SCY}/2 - 4X - 110$		90		31890		ns
SCLK rising/falling* → Output data hold	t_{OHS}	$t_{SCY}/2 + 2X + 0$		500		80000		ns
SCLK rising/falling* → Input data hold	t_{HSR}	$3X + 10$		160		24010		ns
SCLK rising/falling → Valid data input	t_{SRD}		$t_{SCY} - 0$		800		128000	ns
Valid data input → SCLK rising/falling	t_{RDS}	0		0		0		ns

*) SCLK rinsing/falling edge: The rising edge is used in SCLK rising mode.
The falling edge is used in SCLK falling mode.

Note: Value of f_{SYS} = 20 MHz, 125 kHz is value if t_{SCY} = 16X.

(2) SCLK output mode

Parameter	Symbol	Variable		f_{SYS} = 20 MHz (fc = 40 MHz)		f_{SYS} = 125 kHz (fc = 4 MHz)		Unit
		Min	Max	Min	Max	Min	Max	
SCLK period	t_{SCY}	16X	8192X	0.8	409.6	128	65536	μs
Output data → SCLK rising/falling*	t_{OSS}	$t_{SCY}/2 - 40$		360		3960		ns
SCLK rising/falling* → Output data hold	t_{OHS}	$t_{SCY}/2 - 40$		360		3960		ns
SCLK rising/falling* → Input data hold	t_{HSR}	0		0		0		ns
SCLK rising/falling → Valid data input	t_{SRD}		$t_{SCY} - 1X - 180$		409.4		65528	ns
Valid data input → SCLK rising/falling	t_{RDS}	$1X + 180$			230		8180	ns

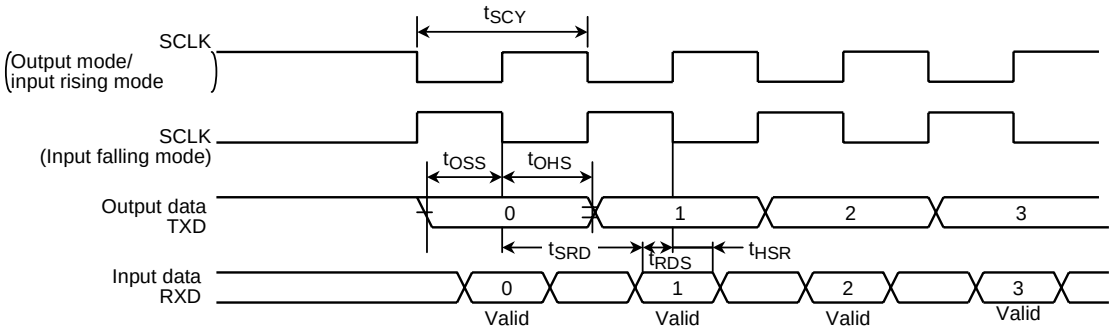

4.6 Interrupt, Capture

Note: Symbol "X" in the following table means the period of clock "f_{SYS}", it's same period of the system clock "f_{SYS}" for CPU core. The period of f_{SYS} depends on the clock gear setting or changing high-speed oscillator/low-speed oscillator and so on.

(1) $\overline{NMI}$ and INT0 to INT3 interrupts

Parameter	Symbol	Variable		f_{SYS} = 20 MHz (fc = 40 MHz)		f_{SYS} = 125 kHz (fc = 4 MHz)		Unit
		Min	Max	Min	Max	Min	Max	
INT0 to INT3 low width	T_{INTAL}	4X + 40		240		32040		ns
INT0 to INT3 high width	T_{INTAH}	4X + 40		240		32040		

(2) INT4 to INT5 interrupts

t_{INTBL} (INT4 to INT5 Low Level Pulse Width)		t_{INTBH} (INT4 to INT5 High Level Pulse Width)		Unit
Variable	f_{SYS} = 20 MHz (fc = 40 MHz)	Variable	f_{SYS} = 20 MHz (fc = 40 MHz)	
Min	Min	Min	Min	
8X + 100	500	8X + 100	500	ns

4.7 Recommended Oscillation Circuit

TMP92CM22 is evaluated by below oscillator vender. When selecting external parts, make use of this information.

Note 1: Total loads value of oscillation is sum of external (or internal) loads (C1 and C2) and floating loads of actual assemble board. There is a possibility of miss operating using C1 and C2 values in below table. When designing board, it should design minimum length pattern around oscillator. And we recommend that oscillator evaluation try on your actual using board.

Note 2: When use function of reduced drivability for high-frequency oscillator, must be used at f_{OSCH} = 4 to 10 MHz.

(1) Example of oscillation connection circuit

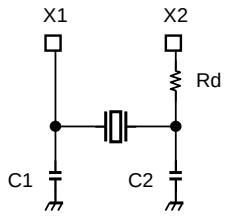

Figure 4.7.1 High-frequency Oscillator

(2) TMP92CM22 recommended ceramic oscillator: Murata Manufacturing Co., Ltd.

Following table shows circuit parameter recommended.

IC Name	Oscillation Frequency [MHz]	Type	Item of Oscillator (Old number)	Parameter of Elements				Running Condition	
				C1 [pF]	C2 [pF]	Rf [Ω]	Rd [Ω]	Voltage of Power [V]	Tc [°C]
TMP92CM22FG	4.000	SMD	CSTCR4M00G55-R0 (New and old is same product No.)	(39)	(39)	Open	0	3.0 to 3.6	−40 to +85
		Lead	CSTLS4M00G56-B0 (CSTS0400MG06)	(47)	(47)	Open	0		
	6.000	SMD	CSTCR6M00G55-R0 (New and old is same product No.)	(39)	(39)	Open	0		
		Lead	CSTLS6M00G56-B0 (CSTS0600MG06)	(47)	(47)	Open	0		
	10.000	SMD	CSTCE10M0G55-R0 (New and old is same product No.)	(33)	(10)	Open	0		
		Lead	CSTLS10M0G53-B0 (CSTS1000MG03)	(15)	(15)	Open	0		
	20.000	SMD (New)	CSTCG20M0V51-R0 (New and old is same product No.)	(6)	(15)	Open	0		
		SMD	CSCTW20M0X51-R0 (CSTCW2000MX01)	(5)	(5)	Open	0		
	36.000	SMD	CSTCW36M0X51-R0 (CSTCW3600MX01)	(6)	(6)	15 k	0		
	40.000	2-pin SMD	CSACW40M0X51-R0) (CSACW4000MX01)	3	3	15 k	0		

Note 1 : In CST ***type oscillator, capacitance C1 and C2 are built in.

Note 2 : It shows pack specification that following number to "–" of product number.
Lead type

-A0: Flat package type (ϕ = 18 mm)
-B0: Separate type

SMD type

-R0: Plastic type (ϕ = 180 mm)
-B0: Separate type

Note 3 : After 2001/06, new products will be made, and the old products (Now in production) will not be made in Murata Manufacturing Co., Ltd.

Note 4 : "()" of C1 and C2 are built in condenser type.

Note 5 : The product numbers and specifications of the resonators by Murata Manufacturing Co., Ltd. are subject to change. For up-to-date information, please refer to the following URL:

http://www.murata.co.jp

5. Table of Special Function Registers (SFRs)

The SFRs include the I/O ports and peripheral control registers allocated to the 8 Kbytes address space from 000000H to 001FFFH.

(1) I/O port

(2) Interrupt controller

(3) DMA controller

(4) Memory controller

(5) Clock gear/PLL

(6) 8-bit timer

(7) 16-bit timer

(8) UART/SIO

(9) I²C bus/SIO

(10) 10-bit ADC

(11) WDT

Table layout

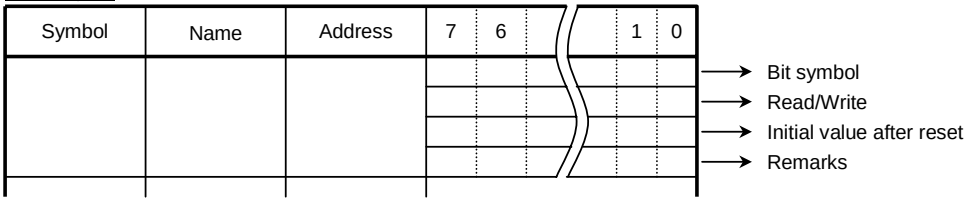

Note: "Prohibit RMW" in the table means that you cannot use RMW instructions on these register.

Example: When setting bit0 only of the register P0CR, the instruction "SET 0, (0002H)" cannot be used.

The LD (Transfer) instruction must be used to write all eight bits.

Read/Write

R/W: Both read and write are possible.

R: Only read is possible.

W: Only write is possible.

W*: Both read and write are possible (when this bit is read as 1).

Prohibit RMW: Read-modify-write instructions are prohibited. (The EX, ADD, ADC, BUS, SBC, INC, DEC, AND, OR, XOR, STCF, RES, SET, CHG, TSET, RLC, RRC, RL, RR, SLA, SRA, SLL, SRL, RLD, and RRD instruction are read-modify-write instructions.)

Prohibit RMW*: Read-modify-write is prohibited when controlling the pull-up resistor.

Table 5.1 I/O Register Address Map

[1] I/O port

Address	Name
0000H	
1H	
2H	
3H	
4H	P1
5H	
6H	P1CR
7H	P1FC
8H	
9H	
AH	
BH	
CH	
DH	
EH	
FH	

Address	Name
0010H	P4
1H	
2H	P4CR
3H	P4FC
4H	P5
5H	
6H	P5CR
7H	P5FC
8H	P6
9H	
AH	P6CR
BH	P6FC
CH	P7
DH	
EH	P7CR
FH	P7FC

Address	Name
0020H	P8
1H	
2H	
3H	P8FC
4H	P9
5H	P9ODE
6H	P9CRP
7H	9FC
8H	PA
9H	
AH	
BH	
CH	
DH	
EH	
FH	

Address	Name
0030H	PC
1H	
2H	PCCR
3H	PCFC
4H	PD
5H	
6H	PDCR
7H	PDFC
8H	
9H	
AH	
BH	
CH	PF
DH	
EH	PFCR
FH	PFFC

Address	Name
0040H	PG
1H	
2H	
3H	
4H	
5H	
6H	
7H	
8H	
9H	
AH	
BH	
CH	
DH	
EH	
FH	

Note: Do not access to the unnamed addresses (e.g., addresses to which no register has been allocated).

[2] Interrupt controller

Address	Name
00D01H	INTE12
2H	INTE3
3H	
4H	
5H	INTETA01
6H	INTETA23
7H	
8H	INTETB01
9H	
AH	INTETBO0I
BH	NTES0
CH	INTES1
DH	
EH	
FH	

Address	Name
00E0H	INTE45
1H	INTETB1
2H	INTETBO1
3H	INTESB0
4H	
5H	
6H	
7H	
8H	
9H	
AH	
BH	
CH	
DH	
EH	INTEP0
FH	

Address	Name
00F0H	INTE0AD
1H	INTETC01
2H	INTETC23
3H	INTETC45
4H	INTETC67
5H	SIMC
6H	IIMC
7H	INTWDT
8H	INTCLR
9H	
AH	IIMC2
BH	
CH	
DH	
EH	
FH	

[3] DMA controller

Address	Name
0100H	DMA0V
1H	DMA1V
2H	DMA2V
3H	DMA3V
4H	DMA4V
5H	DMA5V
6H	DMA6V
7H	DMA7V
8H	DMAB
9H	DMAR
AH	Reserved
BH	
CH	
DH	
EH	
FH	

[4] Memory controller

Address	Name
0140H	B0CSL
1H	B0CSH
2H	MAMR0
3H	MSAR0
4H	B1CSL
5H	B1CSH
6H	MAMR1
7H	MSAR1
8H	B2CSL
9H	B2CSH
AH	MAMR2
BH	MSAR2
CH	B3CSL
DH	B3CSH
EH	MAMR3
FH	MSAR3

Address	Name
0150H	
1H	
2H	
3H	
4H	
5H	
6H	
7H	
8H	BEXCSL
9H	BEXCSH
AH	
BH	
CH	
DH	
EH	
FH	

Address	Name
0160H	
1H	
2H	
3H	
4H	
5H	
6H	PMEMCR
7H	
8H	
9H	
AH	
BH	
CH	
DH	
EH	
FH	

[5] Clock gear/PLL

Address	Name
10E0H	SYSCR0
1H	SYSCR1
2H	SYSCR2
3H	EMCCR0
4H	EMCCR1
5H	EMCCR2
6H	Reserved
7H	
8H	PLLCR
9H	Reserved
AH	
BH	
CH	
DH	
EH	
FH	

[6] 8-bit timer

Address	Name
1100H	TA01RUN
1H	
2H	TA0REG
3H	TA1REG
4H	TA01MOD
5H	TA1FFCR
6H	
7H	
8H	TA23RUN
9H	
AH	TA2REG
BH	TA3REG
CH	TA23MOD
DH	TA3FFCR
EH	
FH	

[7] 16-bit timer

Address	Name
1180H	TB0RUN
1H	
2H	TB0MOD
3H	TB0FFCR
4H	
5H	
6H	
7H	
8H	TB0RG0L
9H	TB0RG0H
AH	TB0RG1L
BH	TB0RG1H
CH	TB0CP0L
DH	TB0CP0H
EH	TB0CP1L
FH	TB0CP1H

Address	Name
1190H	TB1RUN
1H	
2H	TB1MOD
3H	TB1FFCR
4H	
5H	
6H	
7H	
8H	TB1RG0L
9H	TB1RG0H
AH	TB1RG1L
BH	TB1RG1H
CH	TB1CP0L
DH	TB1CP0H
EH	TB1CP1L
FH	TB1CP1H

[8] UART/SIO

Address	Name
1200H	SC0BUF
1H	SC0CRS
2H	C0MOD0
3H	BR0CR
4H	BR0ADD
5H	SC0MOD1
6H	
7H	SIRCR
8H	SC1BUF
9H	SC1CR
AH	SC1MOD0
BH	BR1CR
CH	BR1ADD
DH	SC1MOD1
EH	
FH	

[9] I²C bus/SIO

Address	Name
1240H	SBI0CR1
1H	SBI0DBR
2H	I2C0AR
3H	SBI0CR2/SBI0SR
4H	SBI0BR0
5H	SBI0BR1
6H	
7H	
8H	
9H	
AH	
BH	
CH	
DH	
EH	
FH	

[10] 10-bit ADC

Address	Name
12A0H	ADREG0L
1H	ADREG0H
2H	ADREG1L
3H	ADREG1H
4H	ADREG2L
5H	ADREG2H
6H	ADREG3L
7H	ADREG3H
8H	ADREG4L
9H	ADREG4H
AH	ADREG5L
BH	ADREG5H
CH	ADREG6L
DH	ADREG6H
EH	ADREG7L
FH	ADREG7H

Address	Name
12B0H	
1H	
2H	
3H	
4H	
5H	
6H	
7H	
8H	ADMOD0
9H	ADMOD1
AH	ADMOD2
BH	Reserved
CH	
DH	
EH	
FH	

[11] WDT

Address	Name
1300H	WDMOD
1H	WDCR
2H	
3H	
4H	
5H	
6H	
7H	
8H	
9H	
AH	
BH	
CH	
DH	
EH	
FH	

(1) I/O port (1/3)

Symbol	Name	Address	7	6	5	4	3	2	1	0
P1	Port 1	0004H	P17	P16	P15	P14	P13	P12	P11	P10
			R/W							
			Data from external port (Output latch register is cleared to “0”)							
P4	Port 4	0010H	P47	P46	P45	P44	P43	P42	P41	P40
			R/W							
			Data from external port (Output latch register is cleared to “0”)							
P5	Port 5	0014H	P57	P56	P55	P54	P53	P52	P51	P50
			R/W							
			Data from external port (Output latch register is cleared to “0”)							
P6	Port 6	0018H	P67	P66	P65	P64	P63	P62	P61	P60
			R/W							
			Data from external port (Output latch register is cleared to “0”)							
P7	Port 7	001CH		P76	P75	P74	P73	P72	P71	P70
				R/W						
				Data from external port (Output latch register is cleared to “0”)	1	1	1	1	1	1
P8	Port 8	0020H					P83	P82	P81	P80
							R/W			
							1	0	1	1
P9	Port 9	0024H						P92	P91	P90
								R/W		
								Data from external port (Output latch register is set to “1”)		
PA	Port A	0028H	PA7					PA2	PA1	PA0
			R					R		
			Data from external port					Data from external port		
PC	Port C	0030H		PC6	PC5		PC3		PC1	PC0
				R/W			R/W		R/W	
				Data from external port (Output latch register is set to “1”)			Data from external port (Output latch register is set to “1”)		Data from external port (Output latch register is set to “1”)	
PD	Port D	0034H					PD3	PD2	PD1	PD0
							R/W			
							Data from external port (Output latch register is set to “1”)			
PF	Port F	003CH	PF7	PF6	PF5	PF4	PF3	PF2	PF1	PF0
			R/W							
			Data from external port (Output latch register is set to “1”)							
PG	Port G	0040H	PG7	PG6	PG5	PG4	PG3	PG2	PG1	PG0
			R							
			Data from external port							

I/O port (2/3)

Symbol	Name	Address	7	6	5	4	3	2	1	0
P1CR	Port 1 control register	0006H (Prohibit RMW)	P17C	P16C	P15C	P14C	P13C	P12C	P11C	P10C
			W							
			0	0	0	0	0	0	0	0
			0: Input 1: Output							
P1FC	Port 1 function register	0007H (Prohibit RMW)								P1F
										W
										0/1
			0: Port 1: Data bus (D8 to D15)							
P4CR	Port 4 control register	0012H (Prohibit RMW)	P47C	P46C	P45C	P44C	P43C	P42C	P41C	P40C
			W							
			0	0	0	0	0	0	0	0
			0: Input 1: Output							
P4FC	Port 4 function register	0013H (Prohibit RMW)	P47F	P46F	P45F	P44F	P43F	P42F	P41F	P40F
			W							
			1	1	1	1	1	1	1	1
			0: Port 1: Data bus (A0 to A7)							
P5CR	Port 5 control register	0016H (Prohibit RMW)	P57C	P56C	P55C	P54C	P53C	P52C	P51C	P50C
			W							
			0	0	0	0	0	0	0	0
			0: Input 1: Output							
P5FC	Port 5 function register	0017H (Prohibit RMW)	P57F	P56F	P55F	P54F	P53F	P52F	P51F	P50F
			W							
			1	1	1	1	1	1	1	1
			0: Port 1: Data bus (A8 to A15)							
P6CR	Port 6 control register	001AH (Prohibit RMW)	P67C	P66C	P65C	P64C	P63C	P62C	P61C	P60C
			W							
			0	0	0	0	0	0	0	0
			0: Input 1: Output							
P6FC	Port 6 function register	001BH (Prohibit RMW)	P67F	P66F	P65F	P64F	P63F	P62F	P61F	P60F
			W							
			1	1	1	1	1	1	1	1
			0: Port 1: Data bus (A16 to A23)							
P7CR	Port 7 control register	001EH (Prohibit RMW)		P76C						
				W						
				0						
				0: Input 1: Output						
P7FC	Port 7 function register	001FH (Prohibit RMW)		P76F	P75F	P74F	P73F	P72F	P71F	P70F
				W						
				0	0	0	0	0	0	1
				0: Port 1: $\overline{WAIT}$	0: Port 1: R/$\overline{W}$	0: Port 1: CLKOUT	0: Port 1: Don't set.	0: Port 1: $\overline{WRLU}$	0: Port 1: $\overline{WRLL}$	0: Port 1: $\overline{RD}$
P8FC	Port 8 control register	0023H (Prohibit RMW)					P83F	P82F	P81F	P80F
							W			
							0	0	0	0
							0: Port 1: $\overline{CS3}$	0: Port 1: $\overline{CS2}$	0: Port 1: $\overline{CS1}$	0: Port 1: $\overline{CS0}$

I/O port (3/3)

Symbol	Name	Address	7	6	5	4	3	2	1	0
P9CR	Port 9 control register	0026H (Prohibit RMW)						P92C	P91C	P90C
								W		
								0	0	0
								0: Input 1: Output		
P9FC	Port 9 function register	0027H (Prohibit RMW)						P92F	P91F	P90F
								W		
								0	0	0
								0: Port 1: SI, SCL	0: Port 1: SO, SDA	0: Port 1: SCK
P9ODE	Port 9 ODE register	0025H (Prohibit RMW)						P92ODE	P91ODE	
								W		
								0	0	
								1: Open drain	1: Open drain	
PCCR	Port C control register	0032H (Prohibit RMW)		PC6C	PC5C		PC3C		PC1C	PC0C
				W			W		W	
				0	0		0		0	0
				0: Input 1: Output			0: Input 1: Output		0: Input 1: Output	
PCFC	Port C function register	0033H (Prohibit RMW)		PC6F	PC5F		PC3F		PC1F	PC0F
				W			W		W	
				0	0		1		0	0
				0: Port 1: INT3 TB0OUT0	0: Port 1: INT2 TA3OUT		0: Port 1: INT0		0: Port 1: INT1 TA1OUT	0: Port 1: TA0IN
PDCR	Port D control register	0036H (Prohibit RMW)					PD3C	PD2C	PD1C	PD0C
							W			
							0	0	0	0
							0: Input 1: Output	0: Input 1: Output	0: Input 1: Output	0: Input 1: Output
PDFC	Port D function register	0037H (Prohibit RMW)					PD3F	PD2F	PD1F	PD0F
							W			
							0	0	0	0
							0: Port 1: TB1OUT1	0: Port 1: TB1OUT0	0: Port 1: TB0IN1 INT5 input	0: Port 1: TB0IN0 INT4 input
PFCR	Port F control register	003EH (Prohibit RMW)	PF7C	PF6C	PF5C	PF4C	PF3C	PF2C	PF1C	PF0C
			W							
			0	0	0	0	0	0	0	0
			0: Input 1: Output							
PFFC	Port F function register	003FH (Prohibit RMW)	–	–	PF5F		PF3F	PF2F		PF0F
			W	W	W		W	W		W
			0	0	0		0	0		0
			Always write “0”.	Always write “0”.	0: Port 1: SCLK1 output		0: Port 1: TXD1	0: Port 1: SCLK0 output		0: Port 1: TXD0

(2) Interrupt control (1/2)

Symbol	Name	Address	7	6	5	4	3	2	1	0
INTE12	INT1 & INT2 enable	00D0H	INT2				INT1			
			I2C	I2M2	I2M1	I2M0	I1C	I1M2	I1M1	I1M0
			R	R/W			R	R/W		
			0	0	0	0	0	0	0	0
			1: INT2	Interrupt request level.			1: INT1	Interrupt request level		
INTE3	INT3 enable	00D1H	–				INT3			
			–	–	–	–	I3C	I3M2	I3M1	I3M0
			–	–	–	–	R	R/W		
			0	0	0	0	0	0	0	0
			Always write “0”.				1: INT3	Interrupt request level		
INTETA01	INTTA0 & INTTA1 enable	00D4H	INTTA1 (TMRA1)				INTTA0 (TMRA0)			
			ITA1C	ITA1M2	ITA1M1	ITA1M0	ITA0C	ITA0M2	ITA0M1	ITA0M0
			R	R/W			R	R/W		
			0	0	0	0	0	0	0	0
			1: INTTA1	Interrupt request level			1: INTTA0	Interrupt request level		
INTETA23	INTTA2 & INTTA3 enable	00D5H	INTTA3 (TMRA3)				INTTA2 (TMRA2)			
			ITA3C	ITA3M2	ITA3M1	ITA3M0	ITA2C	ITA2M2	ITA2M1	ITA2M0
			R	R/W			R	R/W		
			0	0	0	0	0	0	0	0
			1: INTTA3	Interrupt request level			1: INTTA2	Interrupt request level		
INTETB01	INTTB00 & INTTB01 enable	00D8H	INTTB1 (TMRB0)				INTTB0 (TMRB0)			
			ITB1C	ITB1M2	ITB1M1	ITB1M0	ITB0C	ITB0M2	ITB0M1	ITB0M0
			R	R/W			R	R/W		
			0	0	0	0	0	0	0	0
			1: INTTB1	Interrupt request level			1: INTTB0	Interrupt request level		
INTETBO0	INTTBO0 (Overflow) enable	00DAH	–				INTTBO0 (TMRB0)			
			–	–	–	–	ITBO0C	ITBO0M2	ITBO0M1	ITBO0M0
			R	R/W			R	R/W		
			0	0	0	0	0	0	0	
			Always write “0”.				1: INTTBO0	Interrupt request level		
INTES0	INTRX0 & INTTX0 enable	00DBH	INTTX0				INTRX0			
			ITX0C	ITX0M2	ITX0M1	ITX0M0	IRX0C	IRX0M2	IRX0M1	IRX0M0
			R	R/W			R	R/W		
			0	0	0	0	0	0	0	0
			1: INTTX0	Interrupt request level			1: INTRX0	Interrupt request level		
INTES1	INTRX1 & INTTX1 enable	00DCH	INTTX1				INTRX1			
			ITX1C	ITX1M2	ITX1M1	ITX1M0	IRX1C	IRX1M2	IRX1M1	IRX1M0
			R	R/W			R	R/W		
			0	0	0	0	0	0	0	0
			1: INTTX1	Interrupt request level			1: INTRX1	Interrupt request level		
INTE45	INT4 & INT5 enable	00E0H	INT5				INT4			
			I5C	I5M2	I5M1	I5M0	I4C	I4M2	I4M1	I4M0
			R	R/W			R	R/W		
			0	0	0	0	0	0	0	0
			1: INT5	Interrupt request level			1: INT4	Interrupt request level		
INTETB1	INTB10 & INTTB11 enable	00E1H	INTTB11 (TMRB1)				INTTB10 (TMRB1)			
			ITB11C	ITB11M2	ITB11M1	ITB11M0	ITB10C	ITB10M2	ITB10M1	ITB10M0
			R	R/W			R	R/W		
			0	0	0	0	0	0	0	0
			1: INTTB11	Interrupt request level			1: INTTB10	Interrupt request level		
INTETBO1	INTTBO1 (Overflow) enable	00E2H	–				INTTBO1 (TMRB1)			
			–	–	–	–	ITBO1C	ITBO1M2	ITBO1M1	ITBO1M0
			–	–	–	–	R	R/W		
			Always write “0”.				0	0	0	0
INTESB0	INTSBE0 INTSBS0 enable	00E3H	–				INTSBE0			
			–	–	–	–	ISBE0C	ISBE0M2	ISBE0M1	ISBE0M0
			–	–	–	–	R	R/W		
			–	–	–	–	0	0	0	0
			Always write “0”.				1: INTSBE0	Interrupt request level		

Interrupt control (2/2)

Symbol	Name	Address	7	6	5	4	3	2	1	0
INTEP0	INTP0 enable	00EEH	–				INTP0			
			–	–	–	–	IP0C	IP0M2	IP0M1	IP0M0
			–	–	–	–	R	R/W		
			0	0	0	0	0	0	0	0
			Always write “0”.				1: INTP0	Interrupt request level		
INTE0AD	INT0 & INTAD enable	00F0H	INTAD				INT0			
			IADC	IADM2	IADM1	IADM0	I0C	I0M2	I0M1	I0M0
			R	R/W			R	R/W		
			0	0	0	0	0	0	0	0
			1: INTAD	Interrupt request level			1: INT0	Interrupt request level		
INTETC01	INTTC0 & INTTC1 enable	00F1H	INTTC1 (DMA1)				INTTC0 (DMA0)			
			ITC1C	ITC1M2	ITC1M1	ITC1M0	ITC0C	ITC0M2	ITC0M1	ITC0M0
			R	R/W			R	R/W		
			0	0	0	0	0	0	0	0
			1: INTTC1	Interrupt request level			1: INTTC0	Interrupt request level		
INTETC23	INTTC2 & INTTC3 enable	00F2H	INTTC3 (DMA3)				INTTC2 (DMA2)			
			ITC3C	ITC3M2	ITC3M1	ITC3M0	ITC2C	ITC2M2	ITC2M1	ITC2M0
			R	R/W			R	R/W		
			0	0	0	0	0	0	0	0
			1: INTTC3	Interrupt request level			1: INTTC2	Interrupt request level		
INTETC45	INTTC4 & INTTC5 enable	00F3H	INTTC5 (DMA5)				INTTC4 (DMA4)			
			ITC5C	ITC5M2	ITC5M1	ITC5M0	ITC4C	ITC4M2	ITC4M1	ITC4M0
			R	R/W			R	R/W		
			0	0	0	0	0	0	0	0
			1: INTTC5	Interrupt request level			1: INTTC4	Interrupt request level		
INTETC67	INTTC6 & INTTC7 enable	00F4H	INTTC7 (DMA7)				INTTC6 (DMA6)			
			ITC7C	ITC7M2	ITC7M1	ITC7M0	ITC6C	ITC6M2	ITC6M1	ITC6M0
			R	R/W			R	R/W		
			0	0	0	0	0	0	0	0
			1: INTTC7	Interrupt request level			1: INTTC6	Interrupt request level		
SIMC	SIO interrupt mode control	00F5H (Prohibit RMW)							IR1LE	IR0LE
									W	W
									1	1
									0:INTRX1 edge mode 1:INTRX1 level mode	0:INTRX0 edge mode 1:INTRX0 level mode
IIMC	Interrupt input mode control	00F6H (Prohibit RMW)			I3EDGE	I2EDGE	I1EDGE	I0EDGE	I0LE	NMIREE
					W					
					0	0	0	0	0	0
					INT3 0:Rising/ high 1:Falling/ low	INT2 0:Rising/ high 1:Falling/ low	INT1 0:Rising/ high 1:Falling/ low	INT0 0:Rising/ high 1:Falling/ low	INT0 0:Edge mode 1:Level mode	NMI 0:Falling 1:Falling and rising
INTWDT	NMI & INTWD enable	00F7H	–	–	–	–	INTWD	–	–	–
			–	–	–	–	R	–	–	–
			–	–	–	–	0	–	–	–
			Always write “0”.				1: INTWD			
INTCLR	Interrupt clear control	00F8H (Prohibit RMW)			CLRV5	CLRV4	CLRV3	CLRV2	CLRV1	CLRV0
					W					
					0	0	0	0	0	0
					Interrupt vector					
IIMC2	Interrupt input mode control	00FAH (Prohibit RMW)					I3LE	I2LE	I1LE	
							W			
							0	0	0	
							INT3 0: Edge 1: Level	INT2 0: Edge 1: Level	INT1 0: Edge 1: Level	

(3) DMA controller

Symbol	Name	Address	7	6	5	4	3	2	1	0
DMA0V	DMA0 start vector	0100H			DMA0V5	DMA0V4	DMA0V3	DMA0V2	DMA0V1	DMA0V0
					R/W					
					0	0	0	0	0	0
					DMA0 start vector					
DMA1V	DMA1 start vector	0101H			DMA1V5	DMA1V4	DMA1V3	DMA1V2	DMA1V1	DMA1V0
					R/W					
					0	0	0	0	0	0
					DMA1 start vector					
DMA2V	DMA2 start vector	0102H			DMA2V5	DMA2V4	DMA2V3	DMA2V2	DMA2V1	DMA2V0
					R/W					
					0	0	0	0	0	0
					DMA2 start vector					
DMA3V	DMA3 start vector	0103H			DMA3V5	DMA3V4	DMA3V3	DMA3V2	DMA3V1	DMA3V0
					R/W					
					0	0	0	0	0	0
					DMA3 start vector					
DMA4V	DMA4 start vector	0104H			DMA4V5	DMA4V4	DMA4V3	DMA4V2	DMA4V1	DMA4V0
					R/W					
					0	0	0	0	0	0
					DMA4 start vector					
DMA5V	DMA5 start vector	0105H			DMA5V5	DMA5V4	DMA5V3	DMA5V2	DMA5V1	DMA5V0
					R/W					
					0	0	0	0	0	0
					DMA5 start vector					
DMA6V	DMA6 start vector	0106H			DMA6V5	DMA6V4	DMA6V3	DMA6V2	DMA6V1	DMA6V0
					R/W					
					0	0	0	0	0	0
					DMA6 start vector					
DMA7V	DMA7 start vector	0107H			DMA7V5	DMA7V4	DMA7V3	DMA7V2	DMA7V1	DMA7V0
					R/W					
					0	0	0	0	0	0
					DMA7 start vector					
DMAB	DMA burst	0108H	DBST7	DBST6	DBST5	DBST4	DBST3	DBST2	DBST1	DBST0
			R/W							
			0	0	0	0	0	0	0	0
			1: DMA request on burst mode							
DMAR	DMA request	0109H (Prohibit RMW)	DREQ7	DREQ6	DREQ5	DREQ4	DREQ3	DREQ2	DREQ1	DREQ0
			R/W							
			0	0	0	0	0	0	0	0
			1: DMA request in software							

(4) Memory controller (1/2)

Symbol	Name	Address	7	6	5	4	3	2	1	0
B0CSL	Block 0 MEMC control register low	0140H (Prohibit RMW)		B0WW2	B0WW1	B0WW0		B0WR2	B0WR1	B0WR0
				W				W		
				0	1	0		0	1	0
				Write waits 001: 0 waits 010: 1 wait 101: 2 waits 110: 3 waits 011: Wait pin Others: Reserved				Read waits 001: 0 waits 010: 1 wait 101: 2 waits 110: 3 waits 011: wait pin Others: Reserved		
B0CSH	Block 0 MEMCT control register high	0141H (Prohibit RMW)	B0E	–	–	B0REC	B0OM1	B0OM0	B0BUS1	B0BUS0
			W							
			0	0	0	0	0	0	0/1	0/1
			CS select 0: Disable 1: Enable	Always write “0”.	Always write “0”.	0: No insert dummy cycle (Default) 1: Insert dummy cycle	00: ROM/SRAM 01: Reserved 10: Reserved 11: Reserved		Data bus width 00: 8 bits 01: 16 bits 10: Reserved 11: Reserved	
B1CSL	Block 1 MEMC control register low	0144H (Prohibit RMW)		B1WW2	B1WW1	B1WW0		B1WR2	B1WR1	B1WR0
				W				W		
				0	1	0		0	1	0
				Write waits 001: 0 waits 010: 1 wait 101: 2 waits 110: 3 waits 011: Wait pin Others: Reserved				Read waits 001: 0 waits 010: 1 wait 101: 2 waits 110: 3 waits 011: Wait pin Others: Reserved		
B1CSH	Block 1 MEMC control register high	0145H (Prohibit RMW)	B1E	–	–	B1REC	B1OM1	B1OM0	B1BUS1	B1BUS0
			W							
			0	0	0	0	0	0	0/1	0/1
			CS select 0: Disable 1: Enable	Always write “0”.	Always write “0”.	0: No insert dummy cycle (Default) 1: Insert dummy	00: ROM/SRAM 01: Reserved 10: Reserved 11: Reserved		Data bus width 00: 8 bits 01: 16 bits 10: Reserved 11: Reserved	
B2CSL	Block 2 MEMC control register low	0148H (Prohibit RMW)		B2WW2	B2WW1	B2WW0		B2WR2	B2WR1	B2WR0
				W				W		
				0	1	0		0	1	0
				Write waits 001: 0 waits 010: 1 wait 101: 2 waits 110: 3 waits 011: Wait pin Others: Reserved				Read waits 001: 0 waits 010: 1 wait 101: 2 waits 110: 3 waits 011: Wait pin Others: Reserved		
B2CSH	Block 2 MEMC control register high	0149H (Prohibit RMW)	B2E	B2M	–	B2REC	B2OM1	B2OM0	B2BUS1	B2BUS0
			W							
			1	0	0	0	0	0	0/1	0/1
			CS select 0: Disable 1: Enable	0: 16 MB 1: Sets area	Always write “0”.	0: No insert dummy cycle (Default) 1: Insert dummy cycle	00: ROM/SRAM 01: Reserved 10: Reserved 11: Reserved		Data bus width 00: 8 bits 01: 16 bits 10: Reserved 11: Reserved	
B3CSL	Block 3 MEMC control register low	014CH (Prohibit RMW)		B3WW2	B3WW1	B3WW0		B3WR2	B3WR1	B3WR0
				W				W		
				0	1	0		0	1	0
				Write waits 001: 0 waits 010: 1 wait 101: 2 waits 110: 3 waits 011: Wait pin Others: Reserved				Read waits 001: 0 waits 010: 1 wait 101: 2 waits 110: 3 waits 011: Wait pin Others: Reserved		
B3CSH	Block 3 MEMC control register high	014DH (Prohibit RMW)	B3E	–	–	B3REC	B3OM1	B3OM0	B3BUS1	B3BUS0
			W							
			0	0	0	0	0	0	0/1	0/1
			CS select 0: Disable 1: Enable	Always write “0”.	Always write “0”.	0: No insert dummy cycle (Default) 1: Insert dummy cycle	00: ROM/SRAM 01: Reserved 10: Reserved 11: Reserved		Data bus width 00: 8 bits 01: 16 bits 10: Reserved 11: Reserved	

Memory controller (2/2)

Symbol	Name	Address	7	6	5	4	3	2	1	0
BEXCSL	Block EX MEMC control register low	0158H (Prohibit RMW)		BEXWW2	BEXWW1	BEXWW0		BEXWR2	BEXWR1	BEXWR0
				W				W		
				0	1	0		0	1	0
				Write waits 001: 0 waits 010: 1 wait 101: 2 waits 110: 3 waits 011: Wait pin Others: Reserved				Read waits 001: 0 waits 010: 1 wait 101: 2 waits 110: 3 waits 011: Wait pin Others: Reserved		
BEXCSH	Block EX MEMC control register high	0159H (Prohibit RMW)		–	–	–	BEXOM1	BEXOM0	BEXBUS1	BEXBUS0
				W						
				0	0	0	0	0	0/1	0/1
				Always write “0”.	Always write “0”.	Always write “0”.	00: ROM/SRAM 01: Reserved 10: Reserved 11: Reserved		Data bus width 00: 8 bits 01: 16 bits 10: Reserved 11: Reserved	
PMEMCR	Page ROM control register	0166H				OPGE	OPWR1	OPWR0	PR1	PR0
						R/W				
						0	0	0	1	0
						ROM page access 0: Disable 1: Enable	Wait number on page 00: 1 state (n-1-1-1 mode) 01: 2 states (n-2-2-2 mode) 10: 3 states (n-3-3-3 mode) 11: (Reserved)		Byte number in a page 00: 64 bytes 01: 32 bytes 10: 16 bytes 11: 8 bytes	
MAMR0	Memory mask register 0	0142H	M0V20	M0V19	M0V18	M0V17	M0V16	M0V15	M0V14-9	M0V8
			R/W							
			1	1	1	1	1	1	1	1
			0: Compare enable 1: Compare disable							
MSAR0	Memory start address register 0	0143H	M0S23	M0S22	M0S21	M0S20	M0S19	M0S18	M0S17	M0S16
			R/W							
			1	1	1	1	1	1	1	1
			Set start address A23 to A16							
MAMR1	Memory mask register 1	0146H	M1V21	M1V20	M1V19	M1V18	M1V17	M1V16	MV15-9	M1V8
			R/W							
			1	1	1	1	1	1	1	1
			0: Compare enable 1: Compare disable							
MSAR1	Memory start address register 1	0147H	M1S23	M1S22	M1S21	M1S20	M1S19	M1S18	M1S17	M1S16
			R/W							
			1	1	1	1	1	1	1	1
			Set start address A23 to A16							
MAMR2	Memory mask register 2	014AH	M2V22	M2V21	M2V20	M2V19	M2V18	M2V17	M2V16	M2V15
			R/W							
			1	1	1	1	1	1	1	1
			0: Compare enable 1: Compare disable							
MSAR2	Memory start address register 2	014BH	M2S23	M2S22	M2S21	M2S20	M2S19	M2S18	M2S17	M2S16
			R/W							
			1	1	1	1	1	1	1	1
			Set start address A23 to A16							
MAMR3	Memory mask register 3	014EH	M3V22	M3V21	M3V20	M3V19	M3V18	M3V17	M3V16	M3V15
			R/W							
			1	1	1	1	1	1	1	1
			0: Compare enable 1: Compare disable							
MSAR3	Memory start address register 3	014FH	M3S23	M3S22	M3S21	M3S20	M3S19	M3S18	M3S17	M3S16
			R/W							
			1	1	1	1	1	1	1	1
			Set start address A23 to A16							

(5) Clock gear

Symbol	Name	Address	7	6	5	4	3	2	1	0
SYSCR0	System clock control 0	10E0H	–					–		
			R/W					R/W		
			1					0		
			Always write “1”.					Always write “0”.		
SYSCR1	System clock control 1	10E1H					–	GEAR2	GEAR1	GEAR0
							R/W	R/W		
							0	1	0	0
							Always write “0”.	Select gear value of high frequency (fc) 000: fc 001: fc/2 010: fc/4 011: fc/8 100: fc/16 101: (Reserved) 110: (Reserved) 111: (Reserved)		
SYSCR2	System clock control 2	10E2H	–		WUPTM1	WUPTM0	HALTM1	HALTM0	SELDRV	DRVE
			R/W		R/W					
			0		1	0	1	1	0	0
			Always write “0”.		Warm-up timer 00: Reserved 01: 2^8/input frequency 10: 2^{14}/input frequency 11: 2^{16}/input frequency		HALT mode 00: Reserved 01: STOP mode 10: IDLE1 mode 11: IDLE2 mode		<DRVE> mode select 0: STOP 1: IDLE1	Pin state control in STOP mode 0: I/O off 1: Remains the state before halt
PLLCR	PLL control	10E8H	PLLON	FCSEL	LWUPFG					
			R/W		R					
			0	0	0					
			0: PLL off 1: PLL on	fc select 0: OSCH 1: PLL (x4)	PLL warm-up flag 0: Don’t end warm up 1: End warm up					
EMCCR0	EMC control register 0	10E3H	PROTECT					EXTIN	DRVOSCH	–
			R					R/W	R/W	R/W
			0					0	1	1
			Protect flag 0: OFF 1: ON					1: External clock	fc oscillator driver ability 1: NORMAL 0: WEAK	Always write “1”.
EMCCR1	EMC control register 1	10E4H	Switching the protect ON/OFF by write to following 1st-KEY, 2nd-KEY 1st-KEY: EMCCR1 = 5AH, EMCCR2 = A5H in succession write 2nd-KEY: EMCCR1 = A5H, EMCCR2 = 5AH in succession write							
EMCCR2	EMC control register 2	10E5H								

(6) 8-bit timer

Symbol	Name	Address	7	6	5	4	3	2	1	0
TA01RUN	TMRA01 RUN register	1100H	TA0RDE				I2TA01	TA01PRUN	TA1RUN	TA0RUN
			R/W				R/W			
			0				0	0	0	0
			Double buffer 0: Disable 1: Enable				IDLE2 0: Stop 1: Operate	8-bit timer run/stop control 0: Stop and clear 1: Run (Count up)		
TA0REG	8-bit timer register 0	1102H (Prohibit RMW)	–							
			W							
			Undefined							
TA1REG	8-bit timer register 1	1103H (Prohibit RMW)	–							
			W							
			Undefined							
TA01MOD	TMRA01 mode register	1104H	TA01M1	TA01M0	PWM01	PWM00	TA1CLK1	TA1CLK0	TA0CLK1	TA0CLK0
			R/W							
			0	0	0	0	0	0	0	0
			Operation mode 00: 8-bit timer mode 01: 16-bit timer mode 10: 8-bit PPG mode 11: 8-bit PWM mode		PWM cycle 00: Reserved 01: 2^6 10: 2^7 11: 2^8		Source clock for TMRA1 00: TA0TRG 01: ϕT1 10: ϕT16 11: ϕT256		Source clock for TMRA0 00: TA0IN pin 01: ϕT1 10: ϕT4 11: ϕT16	
TA1FFCR	TMRA1 flip-flop control register	1105H (Prohibit RMW)					TA1FFC1	TA1FFC0	TA1FFIE	TA1FFIS
							W		R/W	
							1	1	0	0
							00: Invert TA1FF 01: Set TA1FF 10: Clear TA1FF 11: Don't care		TA1FF control for inversion 0: Disable 1: Enable	TA1FF inversion select 0: TMRA0 1: TMRA1
TA23RUN	TMRA23 RUN register	1108H	TA2RDE				I2TA23	TA23PRUN	TA3RUN	TA2RUN
			R/W				R/W			
			0				0	0	0	0
			Double buffer 0: Disable 1: Enable				IDLE2 0: Stop 1: Operate	8-bit timer run/stop control 0: Stop and clear 1: Run (Count up)		
TA2REG	8-bit timer register 2	110AH (Prohibit RMW)	–							
			W							
			Undefined							
TA3REG	8-bit timer register 3	110BH (Prohibit RMW)	–							
			W							
			Undefined							
TA23MOD	TMRA23 mode register	110CH	TA23M1	TA23M0	PWM21	PWM20	TA3CLK1	TA3CLK0	TA2CLK1	TA2CLK0
			R/W							
			0	0	0	0	0	0	0	0
			Operation mode 00: 8-bit timer mode 01: 16-bit timer mode 10: 8-bit PPG mode 11: 8-bit PWM mode		PWM cycle 00: Reserved 01: 2^6 10: 2^7 11: 2^8		Source clock for TMRA3 00: TA2TRG 01: ϕT1 10: ϕT16 11: ϕT256		Source clock for TMRA2 00: Reserved 01: ϕT1 10: ϕT4 11: ϕT16	
TA3FFCR	TMRA3 flip-flop control register	110DH (Prohibit RMW)					TA3FFC1	TA3FFC0	TA3FFIE	TA3FFIS
							W		R/W	
							1	1	0	0
							00: Invert TA3FF 01: Set TA3FF 10: Clear TA3FF 11: Don't care		TA3FF control for inversion 0: Disable 1: Enable	TA3FF inversion select 0: TMRA2 1: TMRA3

(7) 16-bit timer (1/2)

Symbol	Name	Address	7	6	5	4	3	2	1	0
TB0RUN	Timer B0 RUN register	1180H	TB0RDE	–			I2TB0	TB0PRUN		TB0RUN
			R/W	R/W			R/W	R/W		R/W
			0	0			0	0		0
			Double buffer 0: Disable 1: Enable	Always write “0”.			IDLE2 0: Stop 1: Operate	16-bit timer run/stop control 0: Stop and clear 1: Run (Count up)		
TB0MOD	Timer B0 mode register	1182H (Prohibit RMW)	–	–	TB0CP0I	TB0CPM1	TB0CPM0	TB0CLE	TB0CLK1	TB0CLK0
			R/W	R/W	W	R/W				
			0	0	1	0	0	0	0	0
			Always write “0”.	Always write “0”.	Software capture control 0:Software capture 1:Undefined	Capture timing 00: Disable 01: Reserved 10: Reserved 11: TA1OUT ↑ TA1OUT ↓		Up counter control 0: Clear disable 1: Clear enable	Timer B0 source clock 00: Reserved 01: ϕT1 10: ϕT4 11: ϕT16	
TB0FFCR	Timer B0 flip-flop control register	1183H (Prohibit RMW)	–	–	TB0C1T1	TB0C0T1	TB0E1T1	TB0E0T1	TB0FFC1	TB0FFC0
			W*		R/W				W*	
			1	1	0	0	0	0	1	1
			Always write “11”.		TB0FF0 inversion trigger 0: Trigger disable 1: Trigger enable				Control TB0FF0 00: Invert 01: Set 10: Clear 11: Don’t care * Always read as 11.	
					Invert when the UC value is loaded in to TB0CP1.	Invert when the UC value is loaded in to TB0CP0.	Invert when the UC matches with TB0RG1.	Invert when the UC matches with TB0RG0.		
TB0RG0L	16-bit timer register 0 low	1188H (Prohibit RMW)	–							
			W							
			Undefined							
TB0RG0H	16-bit timer register 0 high	1189H (Prohibit RMW)	–							
			W							
			Undefined							
TB0RG1L	16-bit timer register 1 low	118AH (Prohibit RMW)	–							
			W							
			Undefined							
TB0RG1H	16-bit timer register 1 high	118BH (Prohibit RMW)	–							
			W							
			Undefined							
TB0CP0L	Capture register 0 low	118CH	–							
			R							
			Undefined							
TB0CP0H	Capture register 0 high	118DH	–							
			R							
			Undefined							
TB0CP1L	Capture register 1 low	118EH	–							
			R							
			Undefined							
TB0CP1H	Capture register 1 high	118FH	–							
			R							
			Undefined							

16-bit timer (2/2)

Symbol	Name	Address	7	6	5	4	3	2	1	0
TB1RUN	Timer B1 RUN register	1190H	TB1RDE	–			I2TB0	TB1PRUN		TB1RUN
			R/W	R/W			R/W	R/W		R/W
			0	0			0	0		0
			Double buffer 0: Disable 1: Enable	Always write “0”.			IDLE2 0: Stop 1: Operate	16-bit timer run/stop control 0: Stop and clear 1: Run (Count up)		
TB1MOD	Timer B1 mode register	1192H (Prohibit RMW)	TB1CT1	TB1ET1	TB1CP0I	TB1CPM1	TB1CPM0	TB1CLE	TB1CLK1	TB1CLK0
			R/W	R/W	W	R/W				
			0	0	1	0	0	0	0	0
			TB1FF1 inversion trigger 0: Disable trigger 1: Enable trigger		Software capture control 0: Software capture 1: Undefined	Capture timing 00: Disable 01: Reserved 10: Reserved 11: TA1OUT ↑ TA1OUT ↓		Up counter control 0: Clear disable 1: Clear enable	Timer B1 source clock 00: Reserved 01: ϕT1 10: ϕT4 11: ϕT16	
			When capture 1	Match with TREG1						
TB1FFCR	Timer B1 flip-flop control register	1193H (Prohibit RMW)	TB1FF1C1	TB1FF1C0	TB1C1T1	TB1C0T1	TB1E1T1	TB1E0T1	TB1FFC1	TB1FFC0
			W*		R/W				W*	
			1	1	0	0	0	0	1	1
			Control TB1FF1 00: Invert 01: Set 10: Clear 11: Don’t care *Always read as 11.		TB0FF0 inversion trigger 0: Disable trigger 1: Enable trigger				Control TB1FF0 00: Invert 01: Set 10: Clear 11: Don’t care *Always read as 11.	
					Invert when the UC value is loaded in to TB1CP1.	Invert when the UC value is loaded in to TB1CP0.	Invert when the UC value matches the value in TB1RG1.	Invert when the UC value matches the value in TB1RG0.		
TB1RG0L	16-bit timer register 0 low	1198H (Prohibit RMW)	—							
			W							
			Undefined							
TB1RG0H	16-bit timer register 0 high	1199H (Prohibit RMW)	—							
			W							
			Undefined							
TB1RG1L	16-bit timer register 1 low	119AH (Prohibit RMW)	—							
			W							
			Undefined							
TB1RG1H	16-bit timer register 1 high	119BH (Prohibit RMW)	—							
			W							
			Undefined							
TB1CP0L	Capture register 0 low	119CH	—							
			R							
			Undefined							
TB1CP0H	Capture register 0 high	119DH	—							
			R							
			Undefined							
TB1CP1L	Capture register 1 low	119EH	—							
			R							
			Undefined							
TB1CP1H	Capture register 1 high	119FH	—							
			R							
			Undefined							

(8) UART/Serial channel (1/2)

Symbol	Name	Address	7	6	5	4	3	2	1	0
SC0BUF	Serial channel 0 buffer register	1200H (Prohibit RMW)	RB7 TB7	RB6 TB6	RB5 TB5	RB4 TB4	RB3 TB3	RB2 TB2	RB1 TB1	RB0 TB0
			R(Receiving) / W(Transmission)							
			Undefined							
SC0CR	Serial channel 0 control register	1201H	RB8	EVEN	PE	OERR	PERR	FERR	SCLKS	IOC
			R	R/W		R (Clear o after reading)			R/W	
			Undefined	0	0	0	0	0	0	0
			Receive data bit8	Parity 0: Odd 1: Even	Parity 0: Disable 1: Enable	1: Error Overrun	Parity	Framing	0: SCLK0 ↑ 1: SCLK0 ↓	0: Baud rate generator 1: SCLK0 pin input
SC0MOD0	Serial channel 0 mode 0 register	1202H	TB8	CTSE	RXE	WU	SM1	SM0	SC1	SC0
			R/W							
			0	0	0	0	0	0	0	0
			Transmis-sion data bit8	0:CTS disable 1:CTS enable	0:Receive disable 1:Receive enable	Wake up 0: Disable 1: Enable	00: I /O interface mode 01: 7-bit UART mode 10: 8-bit UART mode 11: 9-bit UART mode		00: Timer TA0REG 01: Baud rate generator 10: Internal clock fio 11: External clock (SCLK0 input)	
BR0CR	Serial channel 0 baud rate control register	1203H	–	BR0ADDE	BR0CK1	BR0CK0	BR0S3	BR0S2	BR0S1	BR0S0
			R/W							
			0	0	0	0	0	0	0	0
			Always write “0”.	(16 – K)/ 16 divided 0: Disable 1: Enable	00: φT0 01: φT2 10: φT8 11: φT32		Set the frequency divisor “N” (0 to F).			
BR0ADD	Serial channel 0 K setting register	1204H					BR0K3	BR0K2	BR0K1	BR0K0
							R/W			
							0	0	0	0
							Set the frequency divisor “K” (1 to F).			
SC0MOD1	Serial channel 0 mode 1 register	1205H	I2S0	FDPX0						
			R/W	R/W						
			0	0						
			IDLE2 0: Stop 1: Operate	I/O interface mode 1: Full duplex 0: Half duplex						
SIRCR	IrDA control register	1207H	PLSEL	RXSEL	TXEN	RXEN	SIRWD3	SIRWD2	SIRWD1	SIRWD0
			R/W							
			0	0	0	0	0	0	0	0
			Select transmit pulse width 0: 3/16 1: 1/16	Receive data 0: “H” pulse 1: “L” pulse	Transmit 0: Disable 1: Enable	Receive 0: Disable 1: Enable	Select receive pulse width Set effective pulse width for equal or more than 2x × (Value + 1) + 100 ns Can be set: 1 to 14 Can not be set: 0, 15			

UART/Serial channel (2/2)

Symbol	Name	Address	7	6	5	4	3	2	1	0
SC1BUF	Serial channel 1 buffer register	1208H (Prohibit RMW)	RB7 TB7	RB6 TB6	RB5 TB5	RB4 TB4	RB3 TB3	RB2 TB2	RB1 TB1	RB0 TB0
			R (Receiving)/W (Transmission)							
			Undefined							
SC1CR	Serial channel 1 control register	1209H	RB8	EVEN	PE	OERR	PERR	FERR	SCLKS	IOC
			R	R/W		R (Clear 0 after reading)			R/W	
			Undefined	0	0	0	0	0	0	0
			Receive data bit8	Parity 0: Odd 1: Even	Parity 0: Disable 1: Enable	1: Error Overrun	Parity	Framing	0: SCLK1 ↑ 1: SCLK1 ↓	0:Baud rate generator 1:SCLK1 pin input
SC1MOD0	Serial channel 1 mode 0 register	120AH	TB8	CTSE	RXE	WU	SM1	SM0	SC1	SC0
			R/W							
			0	0	0	0	0	0	0	0
			Transmis-sion data bit8	0: CTS disable 1: CTS enable	0: Receive disable 1: Receive enable	Wake up 0: Disable 1: Enable	00: I/O interface mode 01: 7-bit UART mode 10: 8-bit UART mode 11: 9-bit UART mode		00: Timer TA0REG 01: Baud rate generator 10: Internal clock ϕ1 11: External clock (SCLK1 input)	
BR1CR	Serial channel 1 baud rate control register	120BH	–	BR1ADDE	BR1CK1	BR1CK0	BR1S3	BR1S2	BR1S1	BR1S0
			R/W							
			0	0	0	0	0	0	0	0
			Always write “0”.	(16 – K)/16 divided 0: Disable 1: Enable	00: ϕT0 01: ϕT2 10: ϕT8 11: ϕT32		Set the frequency divisor “N” (0 to F).			
BR1ADD	Serial channel 1 K setting register	120CH					BR1K3	BR1K2	BR1K1	BR1K0
							R/W			
							0	0	0	0
							Set the frequency divisor “K” (1 to F).			
SC1MOD1	Serial channel 1 mode 1 register	120DH	I2S1	FDPX1						
			R/W	R/W						
			0	0						
			IDLE2 0: Stop 1: Operate	I/O interface mode 1: Full duplex 0: Half duplex						

(9) I²C bus/Serial channel (1/2)

Symbol	Name	Address	7	6	5	4	3	2	1	0
SBI0CR1	SBI0 control register 1	1240H (Prohibit RMW) I²C mode	BC2	BC1	BC0	ACK		SCK2	SCK1	SCK0/ SWRMON
			W			R/W		W		R/W
			0	0	0	0		0	0	0/1
			Number of transfer bits 000: 8 001: 1 010: 2 011: 3 100: 4 101: 5 110: 6 111: 7			Acknowledge mode 0: Disable 1: Enable		Setting of the divide value "n" 000: 5 001: 6 010: 7 011: 8 100: 9 101: 10 110: 11 111: Reserved		
		1240H (Prohibit RMW) SIO mode	SIOS	SIOINH	SIOM1	SIOM0		SCK2	SCK1	SCK0
			W					W		W
			0	0	0	0		0	0	0
			Transfer 0: Stop 1: Start	Transfer 0: Continue 1: Abort	Transfer mode 00: 8-bit transmit 10: 8-bit transmit/receive 11: 8-bit receive			Setting of the divide value "n" 000:4 001:5 010:6 011:7 100:8 101:9 110:10 111:External clock SCK0		
SBI0DBR	SBI0 buffer register	1241H (Prohibit RMW)	RB7/TB7	RB6/TB6	RB5/TB5	RB4/TB4	RB3/TB3	RB2/TB2	RB1/TB1	RB0/TB0
			R (Receiving)/W (Transmission)							
			Undefined							
I2C0AR	I²C bus0 address register	1242H (Prohibit RMW	SA6	SA5	SA4	SA3	SA2	SA1	SA0	ALS
			W							
			0	0	0	0	0	0	0	0
			Setting slave address							Address recognition 0 :Enable 1: Disable
SBI0SR when read	Serial bus interface status register	1243H (I²C mode) (Prohibit RMW)	MST	TRX	BB	PIN	AL/SBIM 1	AAS/ SBIM0	AD0/ SWRST	LARB/ SWRST0
			W							
			0	0	0	1	0	0	0	0
			0: Slave 1: Master	0: Receive 1: Transmit	Bus status monitor 0: Free 1: Busy	INTSBE0 request monitor 0: Request 1: Cancel	Arbitration lost detection monitor 0: – 1: Detect	Slave address match detection monitor 0: Undetect 1: Detect	GENERAL CALL detection monitor 0:Undetect 1: Detect	Last received bit monitor 0: 0 1: 1
SBI0CR2 when write	Serial bus interface control register2				Start/stop condition generation 0: Start condition 1: Stop condition		Serial bus interface operating mode selection 00: Port mode 01: SIO mode 10: I²C bus mode 11: (Reserved)		Software reset generate write "10" and "01", then an internal reset signal is generated.	
SBI0SR when read	Serial bus interface status register	1243H (SIO mode) (Prohibit RMW)					SIOF/ SBIM1	SEF/ SBIM2	–	–
							R/W	R/W	W	W
							0	0	0	0
							Transmit status monitor 0: Stopped 1: Terminated in progress	Shift operation status monitor 0: Stopped 1: Terminated in progress		
SBI0CR2 when write	Serial bus interface control register2						Serial bus interface operating mode selection 00: Port mode 01: SIO mode 10: I²C bus mode 11: (Reserved)		Always write "0".	Always write "0".

I²C bus/Serial channel (2/2)

Symbol	Name	Address	7	6	5	4	3	2	1	0
SBI0BR0	SBI0 baud rate register 0	1244H (I²C mode) (Prohibit RMW)	–	I2SBI0						
			W	R/W						
			0	0						
			Always write "0".	IDLE2 0: Abort 1: Operate						
		1244H (SIO mode) (Prohibit RMW)	–	–						
			W	R/W						
			0	0						
			Always write "0".	Always write "0".						
SBI0BR1	SBI0 baud rate register 1	1245H	P4EN	–						
			R/W	W						
			0	0						
			Clock control 0: Stop 1: Operate	Always write "0".						

(10) AD converter (1/2)

Symbol	Name	Address	7	6	5	4	3	2	1	0
ADMOD0	AD mode control register 0	12B8H	EOCF	ADBF	–	–	ITM0	REPEAT	SCAN	ADS
			R		R/W	R/W	R/W			
			0	0	0	0	0	0	0	0
			AD conversion end flag 0: Busy 1: End	AD conversion busy flag 0: End 1: Busy	Always write "0".	Always write "0".	0: Every 1 time 1: Every 4 times	Repeat mode 0: Single mode 1: Repeat mode	Scan mode 0: Fixed channel mode 1: Channel scan mode	AD conversion start 1: Start Always read as "0".
ADMOD1	AD mode control register 1	12B9H	VREFON	I2AD	–	–	–	ADCH2	ADCH1	ADCH0
			R/W	R/W	R/W	R/W	R/W	R/W		
			0	0	0	0	0	0	0	0
			Ladder resistance 0: OFF 1: ON	IDLE2 0: Stop 1: Operate	Always write "0".	Always write "0".	Always write "0".	Input channel 000: AN0 AN0 001: AN1 AN0→AN1 010: AN2 AN0→AN1→AN2 011: AN3 AN0→AN1→AN2→AN3 100: AN4 AN0→AN1→AN2→AN3→AN4 101: AN5 AN0→AN1→AN2→AN3→AN4→AN5 110: AN6 AN0→AN1→AN2→AN3→AN4→AN5→AN6 111: AN7 AN0→AN1→AN2→AN3→AN4→AN5→AN6→AN7		
ADMOD2	AD mode control register 2	12BAH								ADTRG
										R/W
										0
										AD external trigger start control 0: Disable 1: Enable
ADREG0L	AD result register 0 low	12A0H	ADR01	ADR00						ADR0RF
			R							R
			Undefined							0
ADREG0H	AD result register 0 high	12A1H	ADR09	ADR08	ADR07	ADR06	ADR05	ADR04	ADR03	ADR02
			R							
			Undefined							
ADREG1L	AD result register 1 low	12A2H	ADR11	ADR10						ADR1RF
			R							R
			Undefined							0
ADREG1H	AD result register 1 high	12A3H	ADR19	ADR18	ADR17	ADR16	ADR15	ADR14	ADR13	ADR12
			R							
			Undefined							
ADREG2L	AD result register 2 low	12A4H	ADR21	ADR20						ADR2RF
			R							R
			Undefined							0
ADREG2H	AD result register 2 high	12A5H	ADR29	ADR28	ADR27	ADR26	ADR25	ADR24	ADR23	ADR22
			R							
			Undefined							
ADREG3L	AD result register 3 low	12A6H	ADR31	ADR30						ADR3RF
			R							R
			Undefined							0
ADREG3H	AD result register 3 high	12A7H	ADR39	ADR38	ADR37	ADR36	ADR35	ADR34	ADR33	ADR32
			R							
			Undefined							

AD converter (2/2)

Symbol	Name	Address	7	6	5	4	3	2	1	0
ADREG4L	AD result register 4 low	12A8H	ADR41	ADR40						ADR4RF
			R							R
			Undefined							0
ADREG4H	AD result register 4 high	12A9H	ADR49	ADR48	ADR47	ADR46	ADR45	ADR44	ADR43	ADR42
			R							
			Undefined							
ADREG5L	AD result register 5 Low	12AAH	ADR51	ADR50						ADR5RF
			R							R
			Undefined							0
ADREG5H	AD result register 5 high	12ABH	ADR59	ADR58	ADR57	ADR56	ADR55	ADR54	ADR53	ADR52
			R							
			Undefined							
ADREG6L	AD result register 6 low	12ACH	ADR61	ADR60						ADR6RF
			R							R
			Undefined							0
ADREG6H	AD result register 6 high	12ADH	ADR69	ADR68	ADR67	ADR66	ADR65	ADR64	ADR63	ADR62
			R							
			Undefined							
ADREG7L	AD result register 7 low	12AEH	ADR71	ADR70						ADR7RF
			R							R
			Undefined							0
ADREG7H	AD result register 7 high	12AFH	ADR79	ADR78	ADR77	ADR76	ADR75	ADR74	ADR73	ADR72
			R							
			Undefined							

(11) Watchdog timer

Symbol	Name	Address	7	6	5	4	3	2	1	0
WDMOD	WDT mode register	1300H	WDTE	WDTP1	WDTP0		–	I2WDT	RESCR	–
			R/W				R/W			
			1	0	0		0	0	0	0
			WDT control 1: Enable	Select detecting time 00: $2^{16}/f_{SYS}$ 01: $2^{18}/f_{SYS}$ 10: $2^{20}/f_{SYS}$ 11: $2^{22}/f_{SYS}$			Always write “0”.	IDLE2 0: Stop 1: Operate	1: Internally connects WDT out to the reset pin.	Always write “0”.
WDCR	WDT control register	1301H (Prohibit RMW)	–							
			W							
			–							
			B1H: WDT disable code 4E: WDT clear code							

6. Port Section Equivalent Circuit Diagram

■ Reading the circuit diagram

Basically, the gate symbols written are the same as those used for the standard CMOS logic IC [74HCXX] series.

The dedicated signal is described below.

STOP: This signal becomes active "1" when the halt mode setting register is set to the STOP mode and the CPU executes the HALT instruction. When the drive enable bit <DRVE> is set to "1", however, STOP remains at "0".

The input protection resistance ranges from several tens of ohms to several hundreds of ohms.

■ Data bus (D0 to D7), P1 (D8 to D15), P4 (A0 to A7), P5 (A8 to A15), P6 (A16 to A23), P76 ($\overline{WAIT}$), PD2 (TB1OUT0), PD3 (TB1OUT1), PF6, and PF7

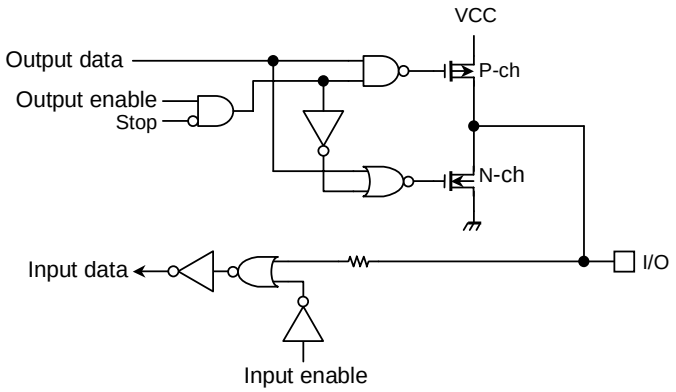

■ P90 (SCK), PC0 (TA0IN), PC1 (TA1OUT/INT1), PC3 (INT0), PC5 (TA3OUT/INT2), PC6 (TB0OUT/INT3), PD0 (INT4/TB1IN0), PD1 (INT5/TB1IN1), PF1 (RXD0), PF2 (SCLK0/$\overline{CTS0}$), PF4 (RXD1), and PF5 (SCLK1/$\overline{CTS1}$)

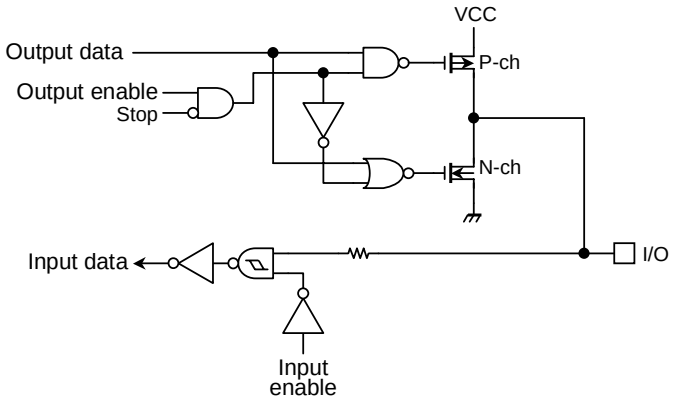

■ P70 ($\overline{RD}$), P71 ($\overline{WRLL}$), P72 ($\overline{WRLU}$), P73, P74 (CLKOUT), P75 (R/$\overline{W}$), P80 ($\overline{CS0}$), P81 ($\overline{CS1}$), P82 ($\overline{CS2}$), and P83 ($\overline{CS3}$)

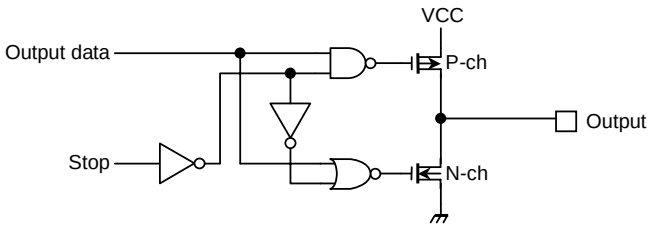

■ PA0, PA1, PA2, and PA7

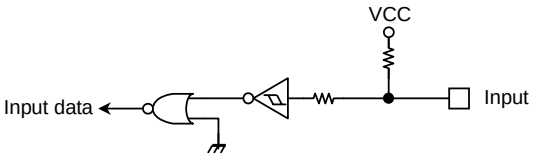

■ P91 (SO/SDA) and P92 (SI/SCL)

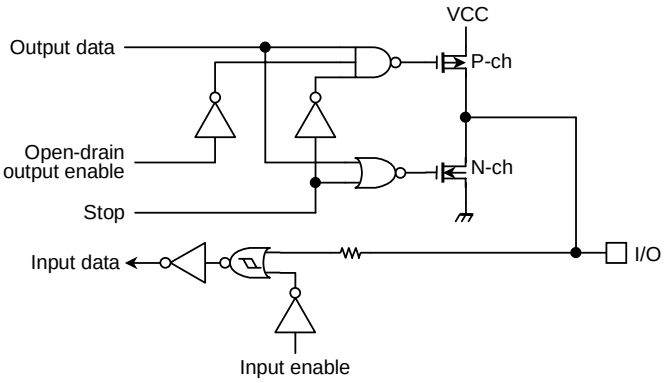

■ PF0 (TXD0) and PF3 (TXD1)

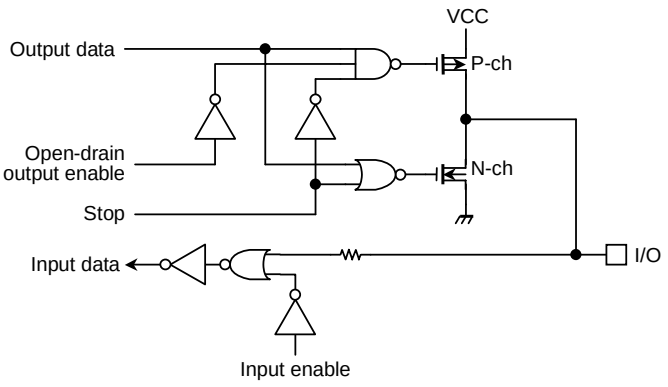

■ PG0 (AN0), PG1 (AN1), PG2 (AN2), PG3 (AN3/$\overline{\text{ADTRG}}$), PG4 (AN4), PG5 (AN5), PG6 (AN6), and PG7 (AN7)

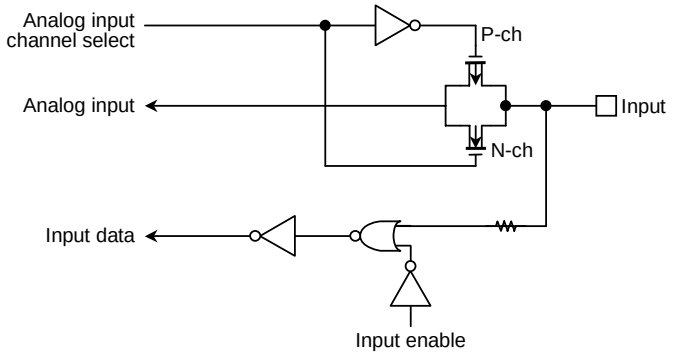

■ $\overline{\text{RESET}}$

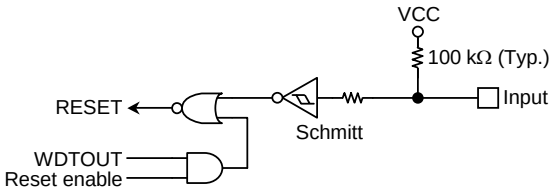

■ X1 and X2

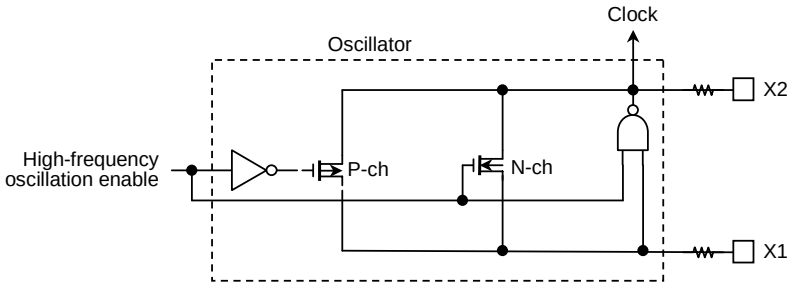

■ VREFH and VREFL

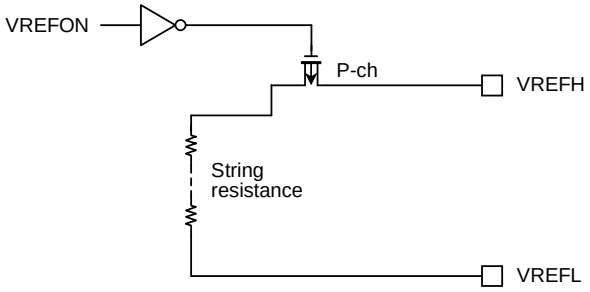

■ AM0 and AM1

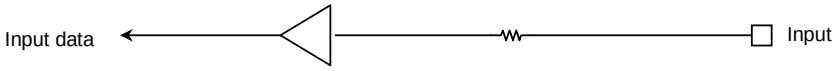

■ $\overline{\text{NMI}}$

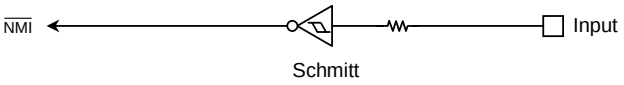

7. Points to Note and Restrictions

(1) Notation

1. The notation for built-in I/O registers is as follows register symbol <Bit symbol>.

   Example: TA01RUN<TA0RUN> denotes bit TA0RUN of register TA01RUN.

2. Read-modify-write instructions (RMW)

   An instruction in that the CPU reads data from memory and writes the data to the same memory location by using one instruction.

   Example 1: SET 3, (TA01RUN) … Set bit3 of TA01RUN.

   Example 2: INC 1, (100H) … Increment the data at 100H.

- Examples of read-modify-write instructions on the TLCS-900

  Exchange instruction

  EX (mem), R

  Arithmetic operations

ADD	(mem), R/#	ADC	(mem), R/#
SUB	(mem), R/#	SBC	(mem), R/#
INC	#3, (mem)	DEC	#3, (mem)

  Logic operations

AND	(mem), R/#	OR	(mem), R/#
XOR	(mem), R/#		

  Bit manipulation operations

STCF	#3/A, (mem)	RES	#3, (mem)
SET	#3, (mem)	CHG	#3, (mem)
TSET	#3, (mem)		

  Rotate and shift operations

RLC	(mem)	RRC	(mem)
RL	(mem)	RR	(mem)
SLA	(mem)	SRA	(mem)
SLL	(mem)	SRL	(mem)
RLD	(mem)	RRD	(mem)

3. f_{OSCH}, fc, f_{FPH}, f_{SYS}, and one state

   The clock frequency that is inputted from X1 and X2 is called "f_{OSCH}". The clock that is selected by PLLCR<FCSEL> register is called "fc".

   The clock that selected by SYSCR1<SYSCK> is called "f_{FPH}". The clock frequency that is give by "f_{FPH}" divided by 2 is called "f_{SYS}".

   One cycle of "f_{SYS}" is referred to as one state.

(2) Points to note

a) AM0 and AM1 pins

This pin is connected to the VCC (Power supply level) or VSS (Ground level) pins. Do not alter the level when the pin is active.

b) Reservation area of address area

TMP92CM22 don't include reservation area.

c) Warm-up counter

The warm-up counter operates when STOP mode is released, even if the system is using an external oscillator. As a result a time equivalent to the warm-up time elapses between input of the release request and output of the system clock.

d) Watchdog timer

The watchdog timer starts operation immediately after a reset is released. When the watchdog timer is not to be used, disable it.

e) AD converter

The string resistor between the VREFH and VREFL pins can be cut by a program so as to reduce power consumption. When STOP mode is used, disable the resistor using the program before the HALT instruction is executed.

f) CPU (micro DMA)

Only the LDC cr, r and LDC r, cr instructions can be used to access the control registers in the CPU (e.g., the transfer source address register (DMASn)).

g) Undefined SFR bit

The value of an undefined bit in an SFR (Special function register) is undefined when read.

h) POP SR instruction

Please execute the POP SR instruction during DI condition.

8. Package Dimensions

P-LQFP100-144-0.50F

Unit: mm

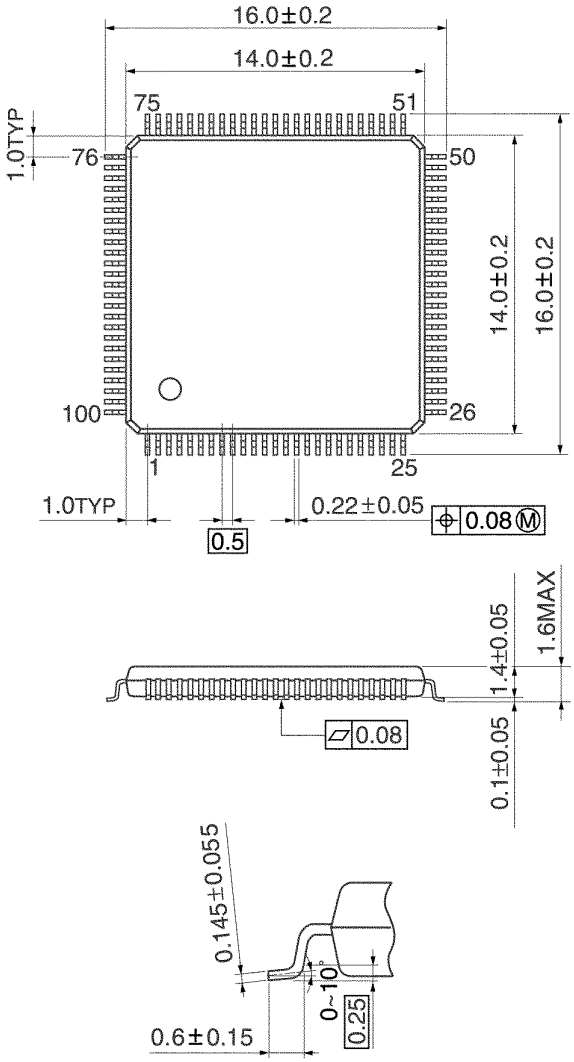

9. Explanation about Production Type

TMP92CM22 F G
a b c

a. Product number

b. Package type: Plastic flat package (LQFP)

c. Solderability of lead free products: Attach G = None lead products
None G = lead products

10. Explanation about Package

Exterior color: Black
Signet method: Laser marking