THIS DRAWING IS UNPUBLISHED. RELEASED FOR PUBLICATION -,- .
© COPYRIGHT - TE Connectivity ALL RIGHTS RESERVED.

REVISIONS

P	LTR	DESCRIPTION	DATE	DWN	APVD
	F	ECR-16-013250	11JUL2017	FL	SY

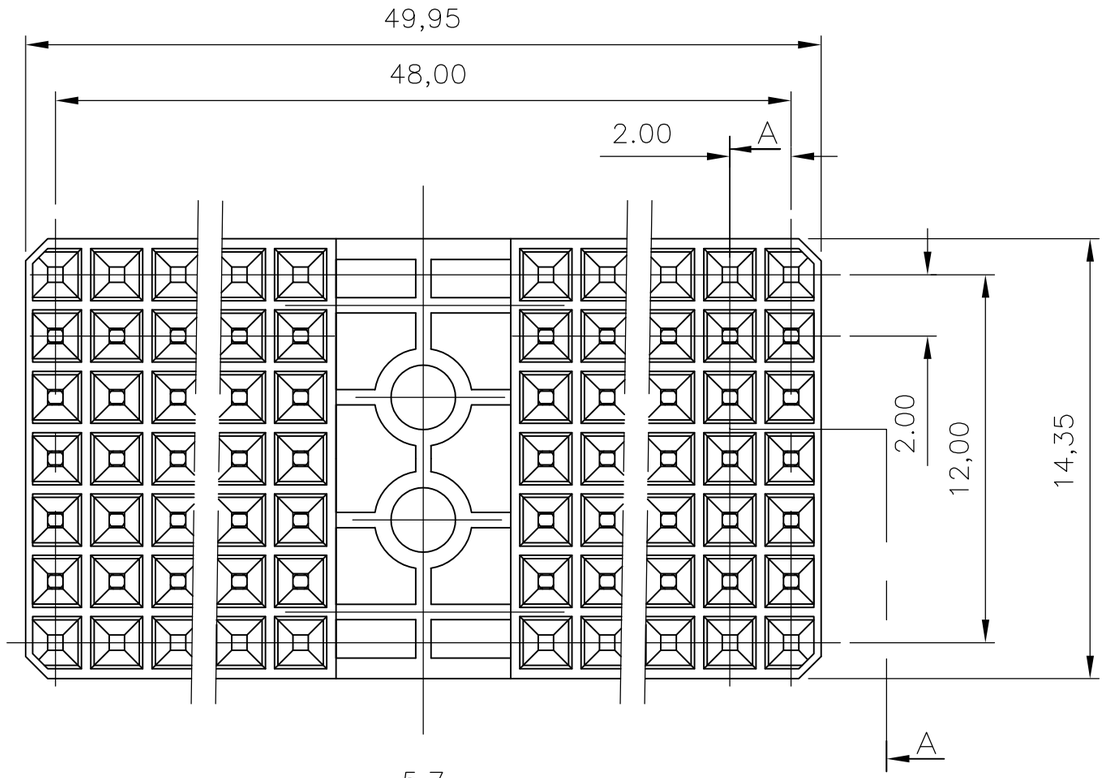

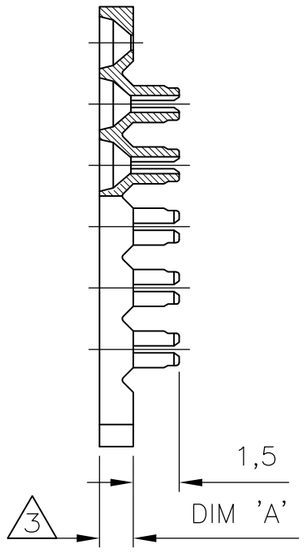

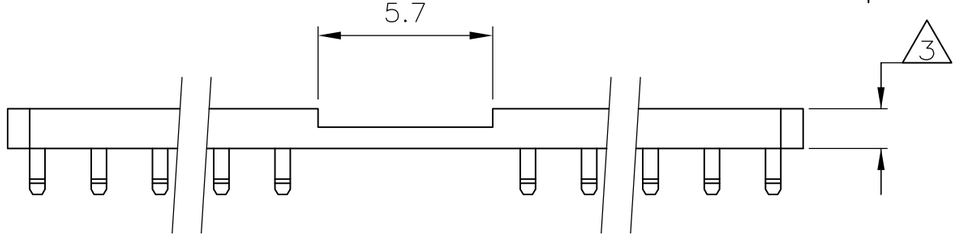

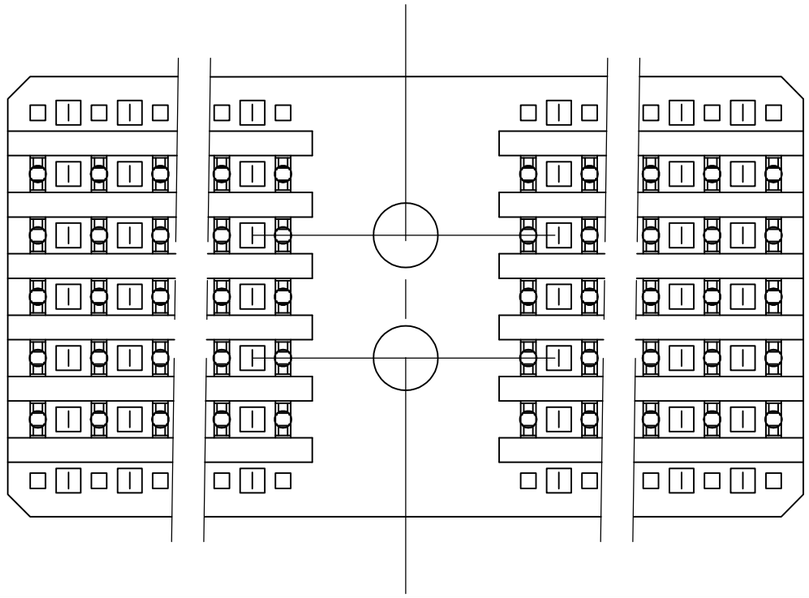

NOTES:

1. MATERIAL: UNFILLED POLYESTER.(GREY)
2. 0-106457-4 AS SHOWN.
3. VARIABLE HEIGHT.
4. TO DETERMINE THE RECOMMENDED SPACER-THICKNESS FOR A GIVEN PCB THICKNESS: SEE APPLICATION SPECIFICATION 114-19031.
5. OBSOLETE PARTS: OBSOLETE CIS STREAMLINING PER D.RENAUD/D.SINISI

	PARTNUMBER	4 DIM "A"
5 OBSOLETE	~~0-106457-1~~	0,7
OBSOLETE	0-106457-2	0,9
OBSOLETE	~~0-106457-3~~	1,1
	~~0-106457-4~~	1,3
OBSOLETE	0-106457-5	1,5
OBSOLETE	0-106457-6	1,7
	0-106457-7	1,9

THIS DRAWING IS A CONTROLLED DOCUMENT.

DIMENSIONS: mm

TOLERANCES UNLESS OTHERWISE SPECIFIED:

0 PLC	± -
1 PLC	± 0.2
2 PLC	± 0.2
3 PLC	± 0.2
4 PLC	± -
ANGLES	± -

MATERIAL 1

FINISH -

DWN 29JUN1993 L.V.D.HEIJDEN
CHK 29JUN1993 F.V.KONINGSBRUGGE
APVD 29JUN1993 F.V.KONINGSBRUGGE
PRODUCT SPEC 108-19082
APPLICATION SPEC 114-19029
WEIGHT 0.000

TE Connectivity

NAME Z-PACK 2mm HM SPACER TYPE A
-
-

SIZE	CAGE CODE	DRAWING NO	RESTRICTED TO
A3	00779	C-106457	—

CUSTOMER DRAWING | SCALE 1:1 | SHEET 1 OF 1 | REV F