THIS DRAWING IS UNPUBLISHED. RELEASED FOR PUBLICATION –,– .
© COPYRIGHT – By – ALL RIGHTS RESERVED.

REVISIONS

P	LTR	DESCRIPTION	DATE	DWN	APVD
	D2	REVISED PER ECO–16–012744	03OCT2016	NK	DR

AMP WIRE RANGE	UL Listed FILE E13288	CSA LR7189 Certified	MILITARY P/N AND CLASS
3/0 AWG SOLID OR STRANDED	3/0 AWG STRANDED	3/0 AWG SOLID OR STRANDED	MS 20659–155 CLASS 2

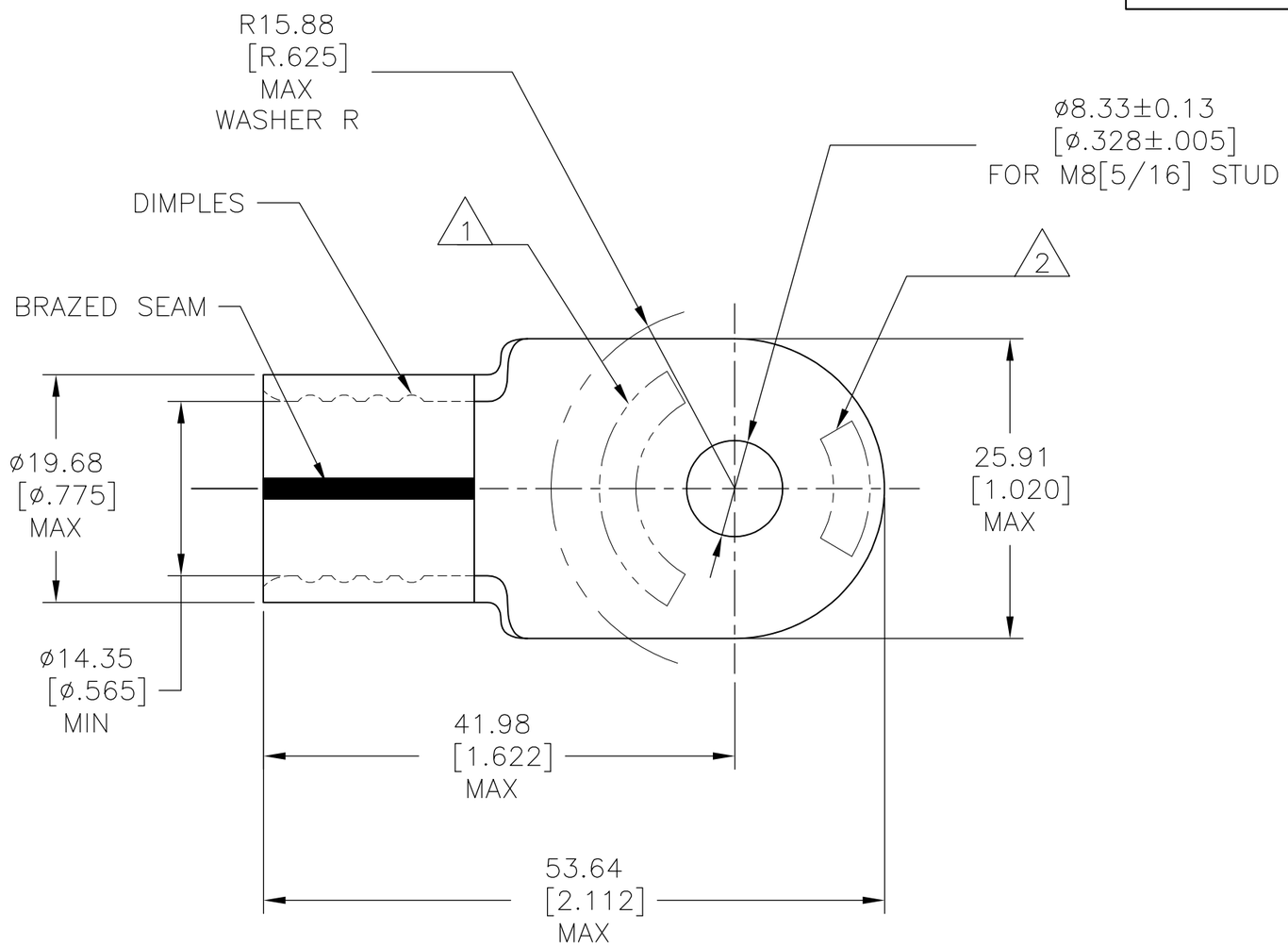

1 STAMP AMP 3/0W* APPROX AS SHOWN.

2 STAMP 150 APPROX AS SHOWN.

3 MATERIAL THK: 2.31±0.08[.091±.003].

4 MATERIAL: COPPER PER ASTM B–152, ANNEALED.

5 FINISH: 0.00254[.000100] MIN THK TIN PLATE PER ASTM B–545.

6 NOTE DELETED.

7 NOTE DELETED.

321874

PART NO.

AMP INCORPORATED
CUSTOMER SERVICE SYSTEMS

FOR ADDITIONAL PRODUCT INFORMATION OR COPIES OF DRAWINGS AND TECHNICAL DOCUMENTS	PRODUCT INFORMATION CENTER 1–800–522–6752	MAX RECOMMENDED OPERATING TEMPERATURE: 170°C[338°F]
		VOLTAGE RATING: N/A
FOR APPLICATION TOOLING INFORMATION	TOOLING ASSISTANCE CENTER 1–800–722–1111	WIRE CROSS SECTIONAL AREA RANGE: 76.3–96.3mm² [150,000–190,000] CIR MILS SOLID OR STRANDED
FOR ORDER ENTRY	1–800–526–5142	

THIS DRAWING IS A CONTROLLED DOCUMENT.

DIMENSIONS: mm [INCHES]

TOLERANCES UNLESS OTHERWISE SPECIFIED:

0 PLC	± –
1 PLC	± –
2 PLC	± 0.20[.008]
3 PLC	± –
4 PLC	± –
ANGLES	± –

MATERIAL 4 FINISH 5

DWN	DK SCHRUM	11/27/91
CHK	RD HEIM	1/10/92
APVD	CR RHOADS	1/10/92
PRODUCT SPEC	—	
APPLICATION SPEC	—	
WEIGHT		

TE Connectivity

NAME: TERMINAL, RING TONGUE, SOLISTRAND

SIZE	CAGE CODE	DRAWING NO	RESTRICTED TO
A3	00779	C–321874	—

CUSTOMER DRAWING | SCALE 2:1 | SHEET 1 OF 2 | REV D2

1470–19 (1/15)

THIS DRAWING IS UNPUBLISHED. RELEASED FOR PUBLICATION –,– .
© COPYRIGHT – By – ALL RIGHTS RESERVED.

REVISIONS

P	LTR	DESCRIPTION	DATE	DWN	APVD
	–	SEE SHEET 1	–	–	–

AMP
WIRE RANGE

3/0 AWG
SOLID OR STRANDED

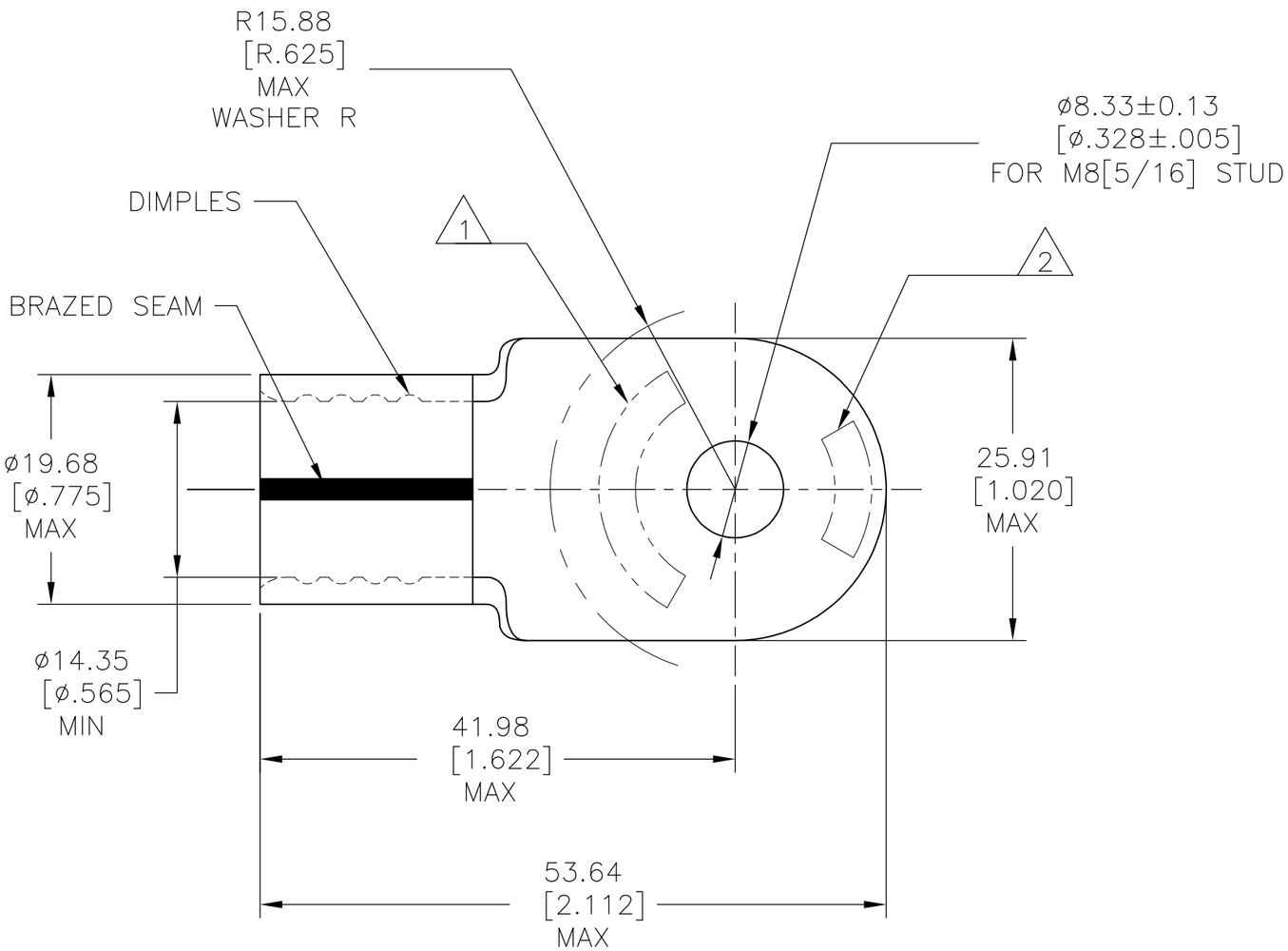

1. STAMP AMP 3/0W* APPROX AS SHOWN.
2. STAMP 150 APPROX AS SHOWN.
3. MATERIAL THK: 2.31±0.08[.091±.003].
4. MATERIAL: COPPER PER ASTM B–152, ANNEALED.
5. FINISH: 0.00762[.000300] MIN THK NICKEL PLATE PER SAE AMS QQ–N–290.
6. NOTE DELETED.
7. NOTE DELETED.

321874–2
PART NO.

AMP INCORPORATED
CUSTOMER SERVICE SYSTEMS

FOR ADDITIONAL PRODUCT INFORMATION OR COPIES OF DRAWINGS AND TECHNICAL DOCUMENTS	PRODUCT INFORMATION CENTER 1–800–522–6752	MAX RECOMMENDED OPERATING TEMPERATURE: 343°C[649°F]
		VOLTAGE RATING: N/A
FOR APPLICATION TOOLING INFORMATION	TOOLING ASSISTANCE CENTER 1–800–722–1111	WIRE CROSS SECTIONAL AREA RANGE: 76.3–96.3mm² [150,000–190,000] CIR MILS SOLID OR STRANDED
FOR ORDER ENTRY	1–800–526–5142	

THIS DRAWING IS A CONTROLLED DOCUMENT.

DIMENSIONS: mm [INCHES]

TOLERANCES UNLESS OTHERWISE SPECIFIED:

0 PLC	± –
1 PLC	± –
2 PLC	± 0.20[.008]
3 PLC	± –
4 PLC	± –
ANGLES	± –

MATERIAL 4

FINISH 5

DWN	DK SCHRUM	11/27/91
CHK	RD HEIM	1/10/92
APVD	CR RHOADS	1/10/92
PRODUCT SPEC	—	
APPLICATION SPEC	—	
WEIGHT		

TE Connectivity

NAME: TERMINAL, RING TONGUE, SOLISTRAND

SIZE	CAGE CODE	DRAWING NO	RESTRICTED TO
A3	00779	C–321874	—

CUSTOMER DRAWING | SCALE 2:1 | SHEET 2 OF 2 | REV D2

1470–19 (1/15)