UL 489 Listed, BU series
FUJI Molded Case Circuit Breakers

■ UL 489 Listed, C22.2 No.5

- UL File No. E90584 Vol.1c Sec. 2
- CSA certificate No. LR701975

AF97-276

BU3EHC

AF97-274

BU3FHC

Frame		100A		150A	
Type		**BU2EHC**	**BU3EHC**	**BU2FHC**	**BU3FHC**
Pole		2	3	2	3
Rated insulation voltage (V)	AC	480	600	480	600
(UL 489)	DC	250	250	250	250
Rated current (A)		15, 20, 25, 30, 35, 40, 45, 50, 60, 70, 80, 90, 100		15, 20, 25, 30, 35, 40, 50 60, 70, 80, 90, 100	15, 20, 25, 30, 35, 40, 50 60, 70, 80, 90, 100, 125, 150
Rated interrupting	600V AC	14		18	
capacity (kA)	480V AC	14		25	
UL489	240V AC	18		65 (125A–150A:42kA)	
CSA22.2	250V DC	10		20	
Dimensions	a	70	105	105	
(mm) 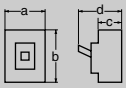	b	160	160	160	
	c	86	86	86	
	d	104	104	104	
Tripping device		Thermal-magnetic		Thermal-magnetic	
Tripping button		Provided		Provided	
Auxiliary switch	W	●	●	●	
Alarm switch	K	●	●	●	
Shunt trip	F	–	●	●	
Undervoltage trip	R	●	●	●	
Operating handle *1	V	BU0VFH		BU0VFH	
	N	BU0NFH		BU0NFH	
Terminal cover *2		BZ-CFHB-2	BZ-CFHB-3	BZ-CFHB-3	BZ-CFHB-3

Notes: ● Factory-mounted optional accessories, specify the type number including optional accessories when ordering.
*1 Customer-mountable optional accessories
*2 For using N type handle: BZ-CFHB-2-**N**, BZ-CFHB-3-**N**
For using V type handle: BZ-CFHB-2-**V**, BZ-CFHB-3-**V**
• If required insulation barrier, contact FUJI.

Type number nomenclature

BU3EH C - 050 L W K F2

Basic type

No. of poles
3: 3-pole
2: 2-pole

Frame size
EH: 100AF
FH: 150AF

Rated current

15: 15A	40: 40A	80: 80A
20: 20A	45: 45A	90: 90A
25: 25A	50: 50A	100: 100A
30: 30A	60: 60A	125: 125A
35: 35A	70: 70A	150: 150A

Terminal

	Line	Load	
L:	Lug terminals	Lug terminals	(Provided)
L1:	Flat terminals	Flat terminals	(Optional)
Y1:	Lug terminals	Flat terminals	(Optional)

With shunt trip device
F2: 120–240V AC/125V DC
F6: 480–600V AC
FQ: 12V DC
FM: 24V DC
FN: 48V DC
FG: 250V DC

With undervoltage trip device

R1: 120V AC	RG: 12V DC
R2: 240V AC	RM: 24V DC
R4: 480V AC	RN: 48V DC
R6: 600V AC	RJ: 125V DC
	RG: 250V DC

With alarm switch
K: Alarm switch

With auxiliary switch
W: 1-auxiliary switch
W2: 2-auxiliary switch

Ordering information

Specify the following:
1. Type number of MCCB including factory-mounted optional accessories
2. Type number customer-mountable optional accessories

Dimensions, mm

BU2EHC

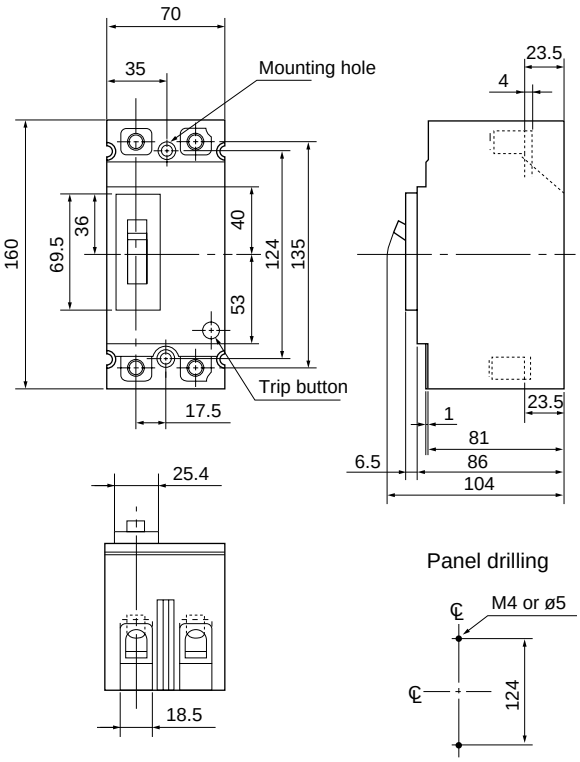

BU2FHC
BU3EHC
BU3FHC

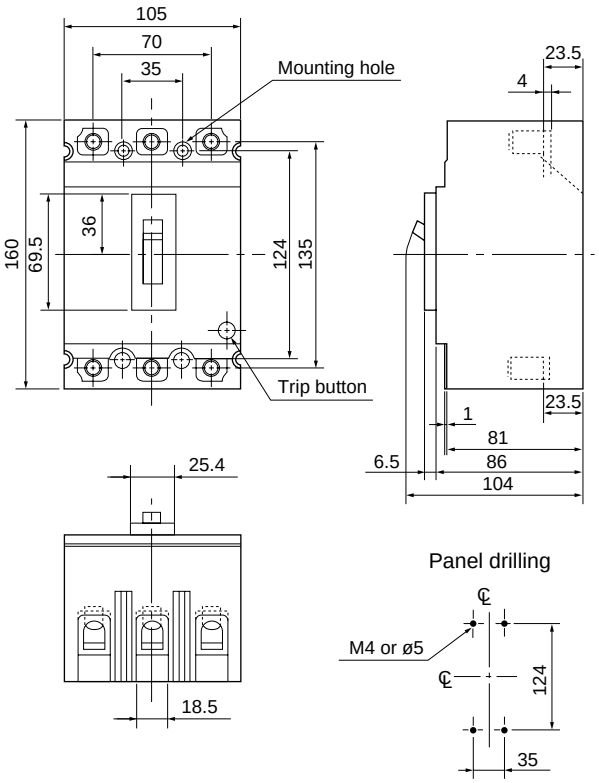

■ Characteristic curves

15 to 50A

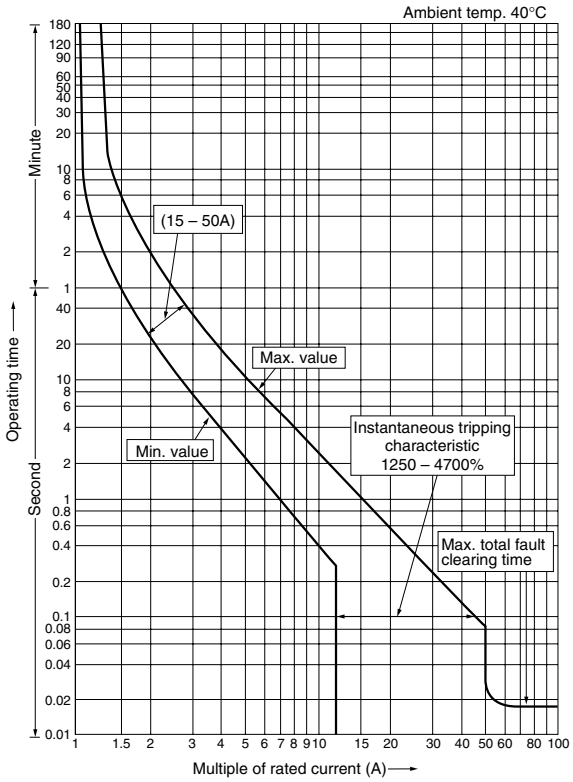

60 to 80A

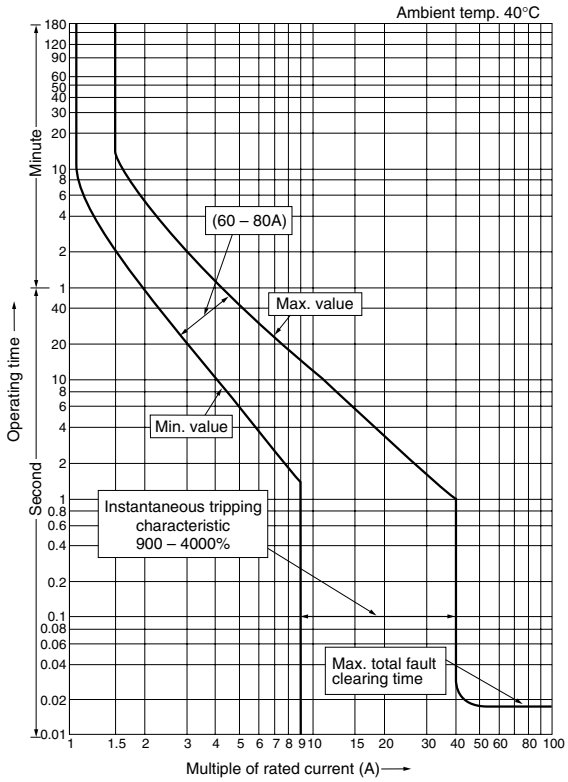

90 to 150A

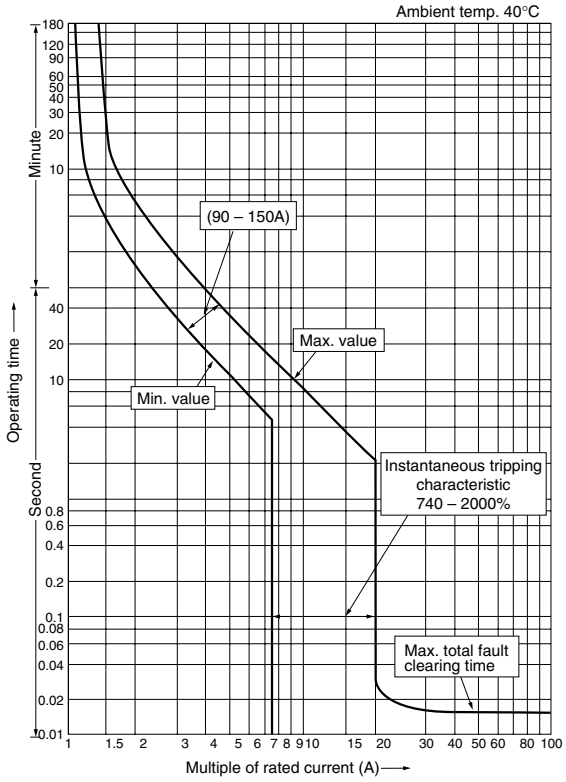

Temperature compensation curve

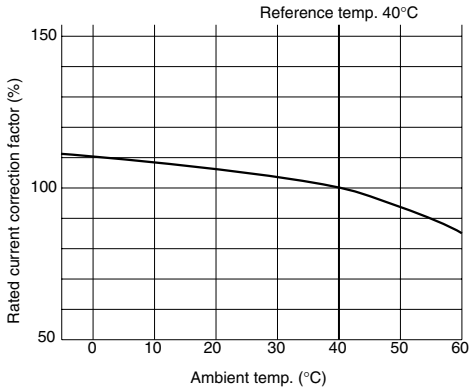

■ Optional accessories

● Shunt trip devices (F)

Type	Rated voltage (V)		Inrush current (A)		Wiring
	AC	DC	AC	DC	
F2	120 – 240	125	1.0 – 1.9	1.0	
F6	480 – 600	–	1.5 – 1.9	–	
FQ	–	12	–	7.5	Black Black
FM	–	24	–	4.6	
FN	–	48	–	2.4	
FG	–	250	–	0.4	

● Undervoltage trip devices (R)

Type	Rated voltage (V)		Rated current (mA)	Wiring
	AC	DC		
R1	120	–	18	
R2	240	–	18	
R4	480	–	18	
R6	600	–	18	
RQ	–	12	200	Blue Blue
RM	–	24	100	
RN	–	48	50	
RJ	–	125	18	
RG	–	250	18	

● Auxiliary switches (W)

Type		Color of lead wire		Make/break current (A)		
		MCCB/ON	MCCB/OFF, Trip	Voltage	Resistive	Inductive
W	SPDT	Red White Brown/white	Red White Brown/White	120V AC 240V AC 125V DC 250V DC	5 – – –	6 6 0.5 0.25
W2	2PDT	Red White Brown/White Orange Gray Orange/White	Red White Brown/White Orange Gray Orange/White	120V AC 240V AC 125V DC 250V DC	5 – – –	6 6 0.5 0.25

● Alarm switches (K)

Type		Color of lead wire		Make/break current (A)		
		MCCB/ON	MCCB/OFF, Trip	Voltage	Resistive	Inductive
K	SPDT	Purple Yellow Brown	Purple Yellow Brown	240V AC 28V DC	5 5	5 2.5

● Available configurations

Accessory \ Type	**BU2EHC, BU2FHC**	**BU3EHC, BU3FHC**	
	T	R	T
W Auxiliary switch	W	W	–
K Alarm switch	K	–	K
F Shunt trip	–	F	–
R Undervoltage trip	R	–	R
W2	W2	W2	–
WK	–	W	K
W2K	–	W2	K
WF	–	F	W
W2F	–	F	W2
WR	–	W	R
W2R	–	W2	R
KF	–	F	K
KR	–	–	–
WKF	–	–	–
WKR	–	–	–

Note: Lead wiring

■ Dimensions, mm

V type operating handle/BU0VFH

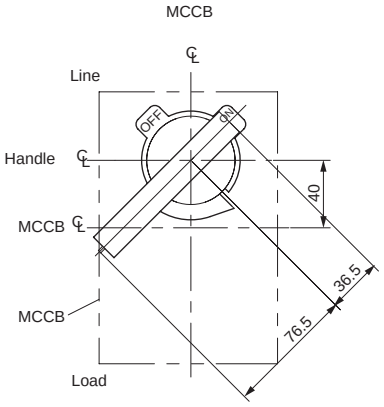

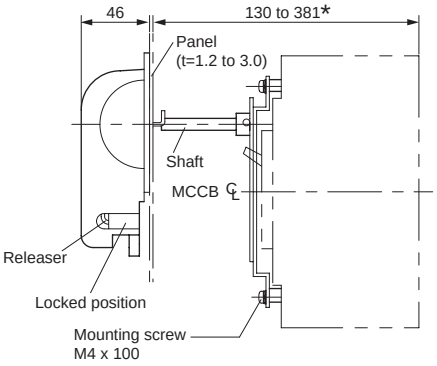

Panel cutting

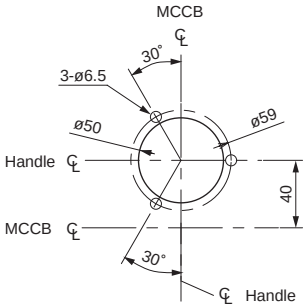

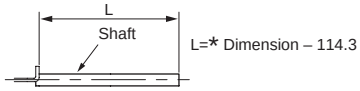

- The door cannot be locked or unlocked using the latch on the door handle.
- Handle protection structure IP54 (IEC 60529, NEMA12)

Distance between the handle and breaker can be shortened by cutting the shaft.

N type operating handle/BU0NFH

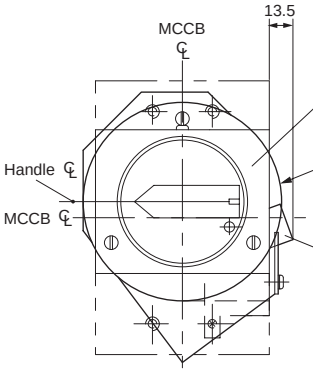

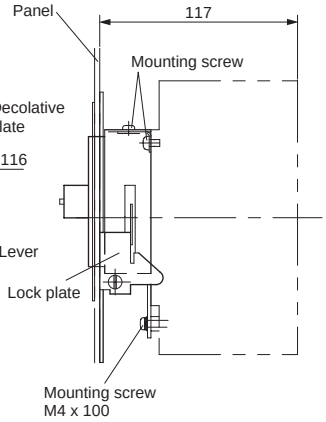

Panel drilling

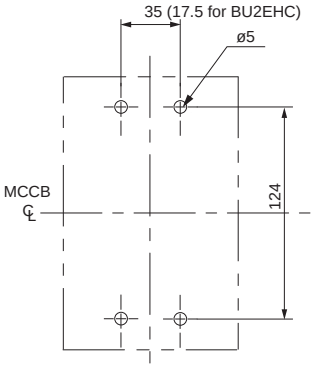

Panel cutting

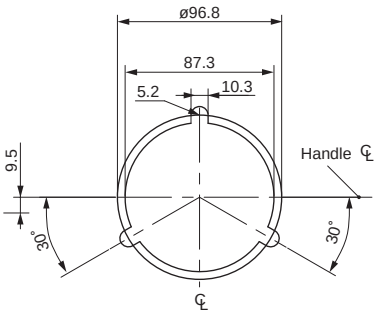

- The door cannot be locked or unlocked using the latch on the door handle. The door can be opened or closed only when the unit is set to OFF.
- Dust-proof packing is not provided

■ Wire connection

1. Make sure that no voltage is applied to the breaker.
2. Connect the breaker in the direction shown in Figure 1 so that the ON mark is on the line side and the OFF mark is on the load side.

Fig. 1

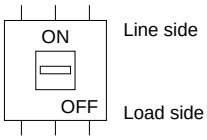

3. The connections of wires must conform to the U.S. National Electric Code (NEC) or the Canadian Electrical Code Part 1 (CEC).
4. For connection, use 60˚C copper wire (15A to 125A) or 75˚C copper wire only. The use of UL-certified or CSA-certified wire is recommended.
5. As the occurrence of a short circuit current could result in the generation of a large electromagnetic force between wires, be sure to firmly support the wires.
6. Periodically retighten the terminal screws. Do not block the arc gas exhaust.

Lug terminals

1. Table 1 lists the sizes of connectable wires. Use wires within this range.
2. The twist count for the wire must conform to Table 1. Multicore wires cannot be used.
3. Two different types of wires cannot be connected to the lug terminal together.
4. Do not solder the wire.
5. Use the tightening torque listed in Table 1 when securing the wire.

Flat terminals

1. Order insulating barriers (interphase barriers).
2. Insulate the terminal part.

Table 1 Max. wire sizes and tightening torque

Rated current	Applicable lug terminal	Wire size	Tightening torque	Screw size
15A max.	**BU0L12HF**	14AWG (2.1mm²)	512N•cm	Slotted head screw
20A		12AWG	45Lb-in	
25A, 30A		10AWG		
35A–50A		8AWG		
60A		6AWG	623N•cm	
70A, 80A	**BU0L12AHF**	4AWG	55Lb-in	
90A		3AWG		
100A	**BU0L15HF**	3AWG		
110A		2AWG		
125A		1AWG		
150A		1/0AWG (53.5mm²)		

■ Mounting

Avoid mounting this breaker in an environment exposed to vibration, shock, dust, or excessive humidity. Secure the insulation distance between a board and the line side of the breaker as shown in Figure 2 and Table 2.

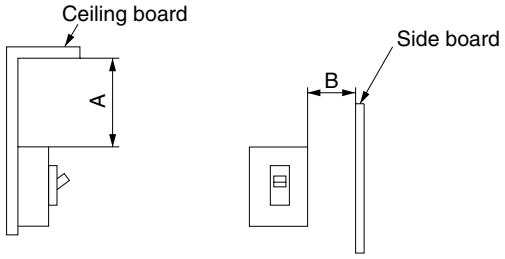

Fig. 2 Insulation distance (line side)

Table 2 Insulation distance (line side) [Unit: mm]

Breaker type	Dimension A Breaker to ceiling board	Dimension B Breaker to side board
BU□EHC	100	25
BU□FHC	100	25

⚠ Safety Considerations

- For safe operation, before using the product read the instruction manual or that comes with the product carefully or consult the Fuji sales representative from which you purchased the product.
- Some of the products listed in this catalog may have limits on their use or location or may require periodic inspections. Contact Fuji's sales representative for further information.
- For safe operation, wiring should be conducted only by qualified engineers who have sufficient technical knowledge about electrical work or wiring.

Fuji Electric Co., Ltd.

ED & C • Drive Systems Company

Gate City Ohsaki, East Tower
11-2, Osaki 1-chome, Shinagawa-ku, Tokyo, 141-0032, Japan

Phone: +81-3-5435-7132
Fax: +81-3-5435-7473 URL http://www.fujielectric.co.jp/eng/index.html

Printed on 100% recycled paper

Information in this catalog is subject to change without notice.

Printed in Japan 2003-3 1 FIS