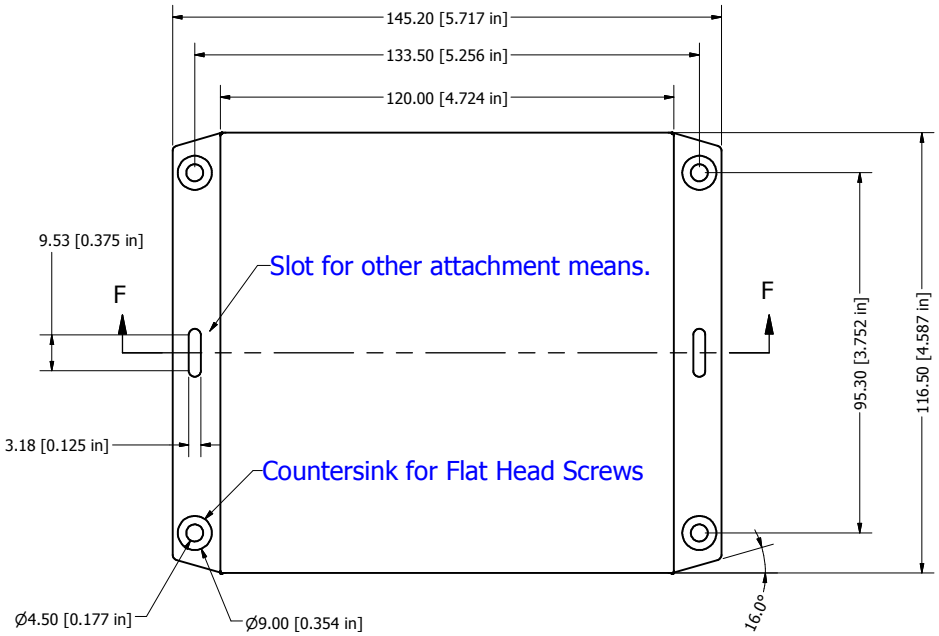

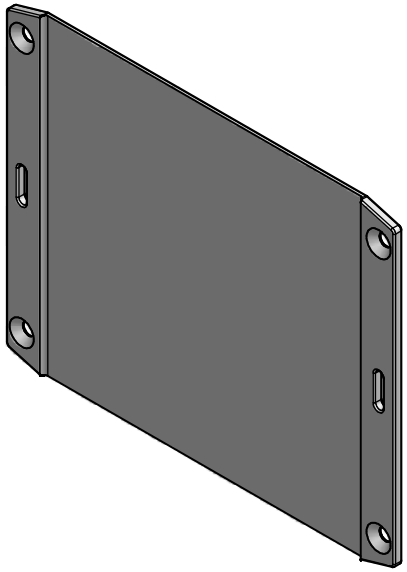

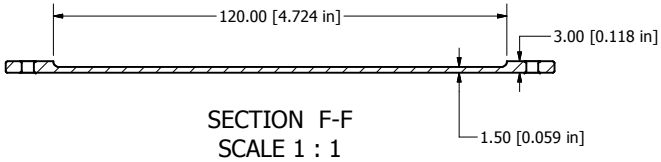

1591U-V Flange
Material - ABS Plastic UL94-V0 rating
Black and Grey stocked. 1591FUBK, 1591FUGY
Designed to fit 1591U and 1591V Enclosures
Attach with ABS Cement or mechanical means.

HAMMOND MANUFACTURING™

1591FU-V

www.hammondmfg.com