ADAPTER P/N	SPLIT SLEEVE MATERIAL	COLOR OF ADAPTER	DUST CAP COLOR
106170-2400	ZR	BLACK	GRAY
106170-2420		GREEN	
106170-2430		RED	
106171-2400	PHOSPHOR BRONZE	BLACK	
106171-2420		GREEN	
106171-2430		RED	
106194-1440		BLACK	YELLOW

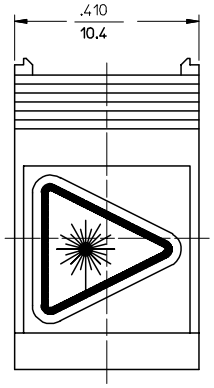

VIEW A
VERSION 1

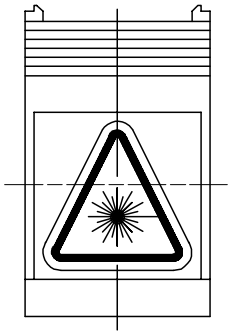

VIEW A
VERSION 2

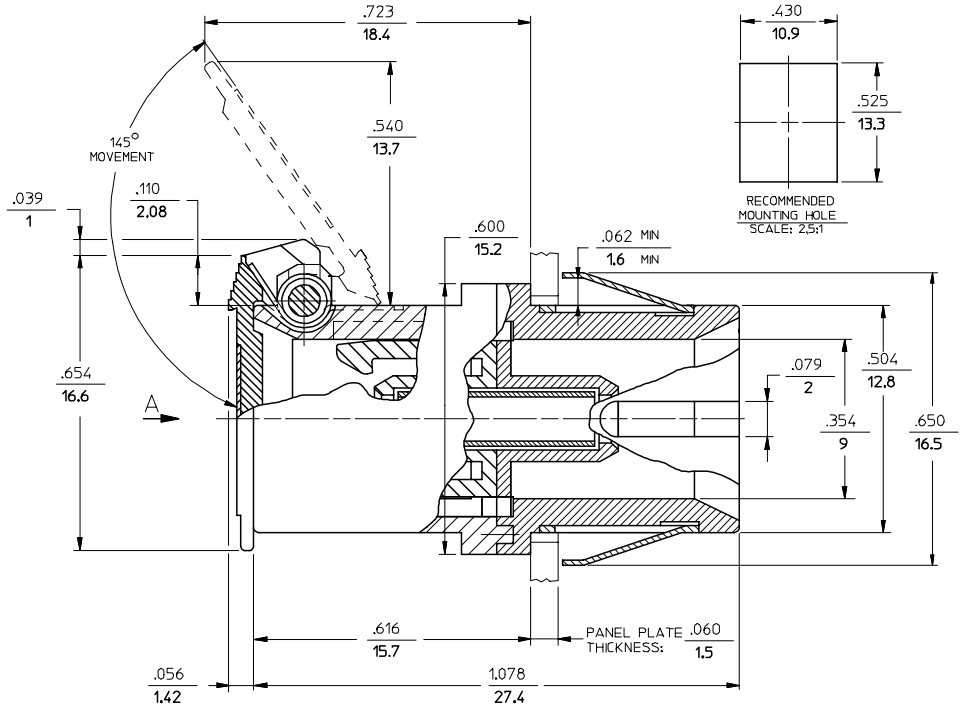

NOTES:

1. ALL DIMENSIONS ARE GIVEN IN INCHES/mm

2. LABEL MUST BE INSTALLED AND ORIENTED BY CUSTOMER. (SEE VIEW A)

3. DUST CAP NOT SHOWN.

ENTER DESCRIPTION
EC NO: MF2007-0207 2006/09/22
DRWN:KPEVZNER 2006/09/22
CHKD: 2006/09/22
APPR: IGUMIN
DESCRIPTION
REV
A1

QUALITY SYMBOLS
▼=0
⚠=0

GENERAL TOLERANCES (UNLESS SPECIFIED)

	mm	INCH
4 PLACES	± ---	± ---
3 PLACES	± ---	± ---
2 PLACES	± ---	± ---
1 PLACE	± ---	± ---
ANGULAR ±1/2°		

DRAFT WHERE APPLICABLE MUST REMAIN WITHIN DIMENSIONS

DIMENSION STYLE: IN/MM
SCALE: 4:1
DESIGN UNITS: INCH
THIRD ANGLE PROJECTION

DRAWN BY DATE
CHECKED BY DATE
APPROVED BY DATE

TITLE: BSC- 2 ADAPTER WITH SHUTTER

molex MOLEX INCORPORATED

MATERIAL NO.: SEE TABLE
DOCUMENT NO.: SD-10617Y-24Y0
SHEET NO.: 1 OF 1
SIZE: C

THIS DRAWING CONTAINS INFORMATION THAT IS PROPRIETARY TO MOLEX INCORPORATED AND SHOULD NOT BE USED WITHOUT WRITTEN PERMISSION