EUROTHERM
DRIVES

AC Inverters

Sensorless Vector

Closed Loop Vector

Servo Drives

DC Drives

Motors

DRIVES

Welcome to the Eurotherm Drives Catalogue - the Number 1 source for AC, DC and Brushless Servo Drives.

Once again even more new products have been introduced to further establish Eurotherm Drives as the leading world specialist in variable speed motor control. The tremendous choice available means that we can offer you the right drive for your application - every time, without compromise.

NEW for the first time

NEW 650 and 650V series of easy to use ac inverters with extended power ratings up to 90kW (page 2-3)

NEW 637+ Ultra high performance brushless servo drive for the most demanding motion control applications (page 10)

NEW Range of standard and vector controlled ac motors at keener prices and shorter deliveries than ever before (page 26-29)

NEW FASTPACK designs of cabinet mounted ac and dc drives with even more options to customise to your exact requirements (page 8 and 22)

NEW ConfigEd Lite+ graphical configuration, diagnostic and monitoring software package covering both ac and dc drives (page 38)

AC Inverters

Sensorless Vector

Closed Loop Vector

Servo Drives

DC Drives

Motors

Geared Motors

Eurotherm Drives – choices not compromises.

EUROTHERM DRIVES

PRODUCT SELECTOR • PRODUCT SE

AC PRODUCT SELECTOR

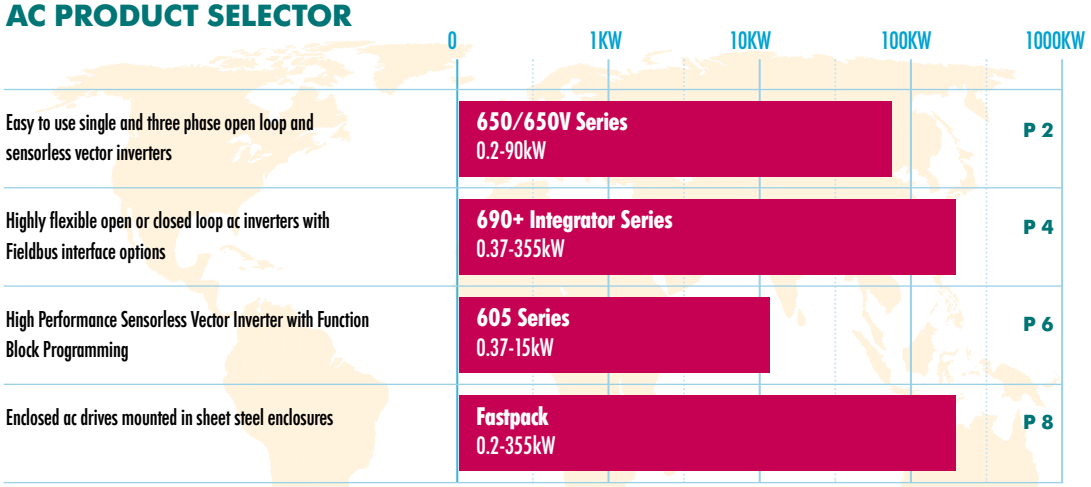

Easy to use single and three phase open loop and sensorless vector inverters	**650/650V Series** 0.2-90kW	P 2
Highly flexible open or closed loop ac inverters with Fieldbus interface options	**690+ Integrator Series** 0.37-355kW	P 4
High Performance Sensorless Vector Inverter with Function Block Programming	**605 Series** 0.37-15kW	P 6
Enclosed ac drives mounted in sheet steel enclosures	**Fastpack** 0.2-355kW	P 8

CONTENTS • CONTENTS • CONTENTS

SECTION 1 AC DRIVES

2	650 Series Open Loop and Sensorless Vector Inverters 0.2-90kW	6	605 Series Open Loop and Sensorless Vector Inverters 0.37-15kW
4	690+ Integrator Series Open Loop, Sensorless and Closed Loop (flux vector) Inverters 0.37-355kW	8	Fastpack Enclosed AC Drives 0.2-355kW

SECTION 2 SERVO DRIVES

9	631 Series AC Brushless Servo Drives 1-6A	11	Servo Drive Cables, Connectors and Ancillaries	14	Parvex Servo Drives and Motors
10	635 Series Modular and Rack Mounted Servo Drives 1-30A	12	ACG, ACM2n and ACR Series Servo Motors 0.1-63Nm		

SECTION 3 DC DRIVES

16	506/507/508 Single Phase DC Drives 1-12A	18	514C Single Phase Isolated Regenerative DC Drives 1-32A	20	590+ Integrator Series Three Phase Regenerative and Non-Regenerative DC Drives 1-2700A
17	512C Single Phase Isolated Non-Regenerative DC Drives 1-32A	19	Ancillaries	21	Fastpack Enclosed DC Drives 1-2700A

SECTION 4 LINK

24	LINK Fibre Optic Based Distributed Drive Control System

SERVO PRODUCT SELECTOR

	0 – 20A	20A – 40A	40A – 3000A	3000A – 5000A	
Highly compact brushless servo drives with built-in motion controller	**631 Series** 1-6A				P 9
Brushless servo drives with built-in motion controller and Fieldbus options	**635/637+ Series** 0-30A				P 10

DC PRODUCT SELECTOR

	0 – 20A	20A – 40A	40A – 3000A	3000A – 5000A	
Low Cost Motor Control With Tacho or Voltage Feedback	**506 Series** 1-12A				P 16
Ideal Lower Power System Drive with Isolated Control Circuits	**512C Series** 1-32A				P 17
Four Quadrant Regenerative Control to Complement the 512C Series	**514C Series** 1-32A				P 18
DC Systems Drive compatible with 690+ Integrator AC series	**590+ Integrator Series** 1-2700A				P 20
Enclosed dc drives mounted in sheet steel enclosures	**Fastpack** 1-2700A				P22

• CONTENTS • CONTENTS • CONTENTS • CONTENTS

SECTION 5 AC MOTORS

26 Standard AC Motors
28 Vector AC Motors
30 AC Motor Dimensions

SECTION 6 ANCILLARY PRODUCTS

32 Feedback Devices
33 Brake Resistors and Fuses
34 EMC Filters and Chokes

SECTION 7 GENERAL INFORMATION

36 Drive Formula and Calculations
38 Software Tools
39 Overseas Contact Details
40 Literature Request
OBC Contact Details

AC DRIVES

650/650V

0.25 to 110kW

The 650 and 650V series is a family of ac drives that provide a no-fuss, cost effective solution for the simplest to most complex open-loop ac motor control applications. The 650 has single key selectable pre-programmed applications so set-up is quick and easy without unnecessary complications. In addition the 650V has the added benefit of an ultra-high torque sensorless vector algorithm and the control flexibility of fully configurable Function Block Programming. Powers are available up to 110kW on 400V three-phase supplies and 45kW on 230V supplies and all units are available with integral EMC compliant filters.

EXTREMELY SIMPLE SET-UP AND OPERATION

INTEGRAL OPERATOR CONTROLS WITH OPTIONAL REMOTE MOUNTING

EXCEPTIONALLY COMPACT DESIGN

150% OVERLOAD FOR 30 SECONDS

MOTOR THERMISTOR INPUT

TECHNICAL SPECIFICATION

Power Supply - Single phase units; 220-240Vac ±10%; 50-60Hz ±5%

Three phase units; 380-460Vac ±10%; 50-60Hz ±5%

Ambient – 0-40°C

Overload – 150% for 30 seconds

Output Frequency – 0-240Hz

Environmental Protection – IP20

Inputs/Outputs

Analogue Inputs – 2; Speed control (0-10V, 4-20mA)

Analogue Outputs – 1; User configurable output frequency/load (0-10V)

Digital Inputs – 3 (650V 6); User configurable start/stop/direction/pre-set speeds (8)

Digital Input/Outputs – 1 (650V 2); User configurable as inputs or outputs

Digital Relay Outputs – 1; User configurable relay output (1A @ 240V)

All outputs configurable for; at (not at) speed / at (above) min speed / running (stopped) / healthy (tripped) / above (below) preset load.

Motor Thermistor Input

Integral Programming/Control Module

6 Button password protectable keypad giving control of

- start/stop
- direction
- raise/lower speed
- menu navigation
- parameter setting

Back lit LCD giving 4 digit readout of

- output current
- setpoint frequency
- output frequency
- drive rotating warning
- status alarms
  - drive ready
  - overcurrent trip
  - overvoltage trip
  - heatsink overtemperature
  - motor overtemperature
  - I x t overload
  - undervoltage
  - 4-20mA signal loss
  - stall trip
  - external trip
  - dynamic brake trip

Telephone: **01903 737000** Fax: **01903 737100**

650/650V

0.25 to 110kW

Single Phase Controllers (230V Nominal)

Type	Nominal Power (kW)	Output Current (A)	Package Size
650(V)-002-230-F	0.25	1.5	1
650(V)-003-230-F	0.37	2.2	1
650(V)-005-230-F	0.55	3.0	1
650(V)-007-230-F	0.75	4.0	1
650(V)-011-230-F	1.1	5.5	2
650(V)-015-230-F	1.5	7.0	2

Three Phase Controllers (400V Nominal)

Type	Nominal Power (kW)	Output Current (A)	Package Size
650(V)-003-400	0.37	1.5	2
650(V)-005-400	0.55	2.0	2
650(V)-007-400	0.75	2.5	2
650(V)-011-400	1.1	3.5	2
650(V)-015-400	1.5	4.5	2
650(V)-022-400	2.2	5.5	2
650(V)-030-400	3.0	6.8	3
650(V)-040-400	4.0	9.0	3
650(V)-055-400	5.5	12	3
650(V)-075-400	7.5	16	3
650VC-0110-400	11 (15)	23 (31)	C
650VC-0150-400	15 (18)	30 (37)	C
650VD-0180-400	18 (22)	38 (45)	D
650VD-0220-400	22 (30)	45 (59)	D
650VD-0300-400	30 (37)	59 (73)	D
650VE-0370-400	37 (45)	73 (87)	E
650VE-0450-400	45 (55)	87 (105)	E
650VF-0550-400	55 (75)	105 (145)	F
650VF-0750-400	75 (90)	145 (165)	F
650VF-0900-400	90 (110)	180 (205)	F

Dimensions

Package Size	H	W	D
1	137	73	142
2	192	73	173
3	257	96	195

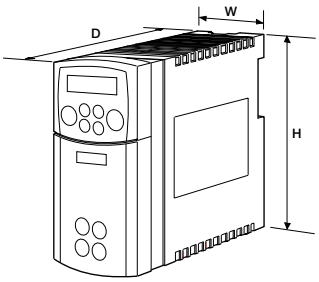

Dimensions

Model	Overall Dimensions			Fixing Centre		Weight
	H	W	D	H1	W1	(kg)
Frame B	233	177	181	223	130	4.3
Frame C	348	201	208	335	150	9.3
Frame D	453	252	245	440	150	17.4
Frame E	669	257	312	630	150	32.5
Frame F	720	257	349	700	150	41.0

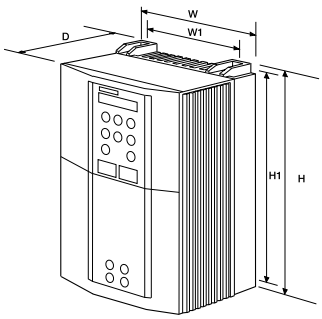

Frame B,C,D,E,F

STANDARDS

The 650V series meets the following standards when installed in accordance with relevant product manual.

CE marked to EN50178 (Safety, Low Voltage Directive)

EN61800-3 (EMC Compliance) with integral filters

UL listed to US and c UL us listed to Canadian safety standards

AC DRIVES

690+ Integrator

0.75 to 355kW

The 690+ series is a single range of ac drives designed to meet the requirements of all variable speed applications from simple single motor speed control through to the most sophisticated integrated multi drive systems. At the heart of the 690+ is a highly advanced, 32-bit microprocessor based, motor control algorithm, to which can be added a host of control options that allow you to tailor the drive to meet your exact requirements.
Three phase (380-500V) ratings are available from 0.37 to 355kW and single phase ratings (220-240V) from 0.37 to 2.2kW.

Open Loop (v/f), Sensorless Vector and Closed Loop Vector in a single drive

Powers up to 355kW

Function Block Programming

Common Programming, Fieldbus and software tools with the 590+ Integrator DC series

Dual rated for constant or quadratic "fan" torque

Integral EMC Compliant Filters

TECHNICAL SPECIFICATION

Power Supply – 220-240Vac (±10%) single or three phase; 380-460Vac (±10%) three phase; (500V option available)
Ambient – Constant torque ratings – 0-45°C (40°C with IP40 cover); Quadratic torque ratings – 0-40°C (35°C with IP40 cover)
Derate from above temperatures to 50°C max
Altitude up to 1000m ASL, derate 1% per 100m above 1000m
Overload – Constant torque ratings – 150% for 60 seconds, 180% for 1 second; Quadratic torque ratings – 115% for 10 seconds
Output Frequency – 0-480Hz
Switching Frequency – Frame B 3,6 or 9kHz; Frame C, D, E and F 3 or 6kHz (all with audibly silent switching pattern)
Dynamic Braking – Frame B and C standard; Frame D,E and F optional

Inputs/Outputs

Analogue Inputs – 4 User configurable, 10bit (12 bit with systems expansion module). 0-10V, 0-±10V, 0-20mA, 4-20mA
Analogue Outputs – 3 User configurable, 10 bit. 0-10V, 0-±10V, 0-20mA, 4-20mA
Digital Inputs – 8 User configurable, nominal 24V dc (30V dc max).
Digital Outputs – 3 User configurable, volt free contact 3A at 230 Vac
Reference Supplies – +10V dc, -10V dc, +24V dc.

Function Block Programming

Function Block Programming allows almost limitless combinations of user functions to be realised with ease. Out of the box the Function Blocks are pre-configured to perform as a standard inverter for immediate use. However by using the programming module or Configed Lite+ software package (see page 62) each function of the drive can be interconnected to any other to perform the required control action.
Function Blocks include;
Value Functions: If, Addition, Difference, Multiplication, Division, Greater than, Less than, Counter, Timer
Logic Functions: Not, And, Nand, Or, Nor, Xor, Trigger, Flip-Flop
Standard Macro's: Basic Speed Control, Forward/Reverse, Raise/Lower, Process PID, Preset Speeds, Closed Loop Speed Feedback, Winder Control

6901 Man Machine Interface

The 6901 Man Machine Interface is used for configuring, parametising and controlling the drive. It has been ergonomically designed to provide intuitive access to all functions in a logical menu driven format.
Key features include:
Detachable for 690+ or control panel mounting
Back lit display
Multilingual 32 character alphanumeric readout
Local control of speed, start/stop, jog and direction
Customised displays and legend
Password and function lockout
Quick set up menu

Systems Expansion Module

An optional add-on systems expansion module is available for more advanced applications including phase locking between drives and register control. Key features include:
5 Extra configurable digital inputs/outputs
4 High resolution (12 bit plus sign) analogue inputs
2 Extra encoder inputs
2 High speed register mark inputs

STANDARDS

The 690+ series meets the following standards when installed in accordance with the relevant product manuals.
CE marked to EN50178 (Safety, Low Voltage Directive)
EN61800-3 (EMC Compliance) with integral filter
UL listed to US and c UL us listed to Canadian safety standards

Telephone: **01903 737000** Fax: **01903 737100**

220-240V (±10%) AC Supply Single Phase

Type	Frame Size	Constant Torque Rating Nominal Power (kW)	Constant Torque Rating Output Current (A)
690PB-0007-230-1	B	0.75	4.0
690PB-0015-230-1	B	1.5	7.0
690PB-0022-230-1	B	2.2	10.5

380-460V (±10%) AC Supply Three Phase

Type	Frame Size	Constant Torque Rating Nominal Power (kW)	Constant Torque Rating Output Current (A)	Quadratic (Fan) Torque Rating Nominal Power (kW)	Quadratic (Fan) Torque Rating Output Current (A)
690PB-0007-400-3	B	0.75	2.5	-	-
690PB-0015-400-3	B	1.5	4.5	-	-
690PB-0022-400-3	B	2.2	5.5	-	-
690PB-0040-400-3	B	4.0	9.5	-	-
690PB-0055-400-3	B	5.5	12		
690PC-0075-400-3	C	7.5	16	11	23
690PC-0110-400-3	C	11	23	15	31 (UL=27)*
690PC-0150-400-3	C	15	31	18.5	38
690PD-0180-400-3	D	18.5	38	22	45
690PD-0220-400-3	D	22	45	30	59(UL=52)*
690PD-0300-400-3	D	30	59	37	73
690PE-0370-400-3	E	37	73	45	87
690PE-0450-400-3	E	45	87	55	105
690PF-0550-400-3	F	55	105	75	145
690PF-0750-400-3	F	75	145	90	165
690PF-0900-400-3	F	90	180	110	205
690PG-1100-400-3	G	110/110**	216	132/150**	260
690PG-1320-400-3	G	132/150	250	150/150	302
690PG-1600-400-3	G	160/185	316	200/225	377
690PG-1800-400-3	G	180/200	361	220/250	420
690PH-2000-400-3	H	200/220	375	250/280	480
690PH-2200-400-3	H	220/250	420	250/280	480
690PH-2500-400-3	H	250/280	480	300/315	545
690PH-2800-400-3	H	280/315	520	315/355	595
690PJ-3150-400-3	J	315/315	550	315/355	595

*Max current for UL listing. 3 Phase 230V and 500V 690+ are also available, please refer to your local Eurotherm Drives sales outlet for details.

**kW Rating at 380/415V. Frames G, H, J require AC Input line choke listed below.

Options

6901 Programming/Control Module			
6052 Remote mounting bezel and 3m lead			
Internal Brake Switch	Frame B,C		
	Frame D		
	Frame E		
Communication Technology Boxes		690B	690C-J
Profibus		6053/PROF	6055/PROF
Modbus/RS422/RS485/EIBisynch		6053/EI00	6055/EI00
Link		6053/LINK	6055/LINK
Devicenet		6053/DNET	6055/DNET
Encoder feedback		AH467407 U001 (Board)	6054/HTTL
Wall Mount IP40 Covers	LA467452 (Frame B)		
	LA465034U002 (Frame C)		
	LA465048U002 (Frame D)		
	LA465058U002 (Frame E)		
System Expansion Module			
ConfigEd Lite+ 'Windows' graphical configuration software (see page 38)			

AC Input Lin Chokes	
C0389936U401	690PG-1100/1320
C0389936U402	690PG-1600/1800 and 690PH-2000/2200
C0389936U403	690PH-2500/2800 and 690PJ

Optional external EMC filters and line chokes please refer to page 34/35.
Details on brake resistors please refer to page 33.

Dimensions

Model	Overall Dimensions H	W	D	Fixing Centre H1	W1	G	Weight (kg)
Frame B	233	177	181	223	130		4.3
Frame C	348	201	208	335	150		9.3
Frame D	453	252	245	440	150		17.4
Frame E	669	257	312	630	150		32.5
Frame F	720	257	349	700	150		41.0
Frame G	1042	456	465	300	420	16	100
Frame H	1177	572	465	300	536	16	125
Frame J	1288	1177	465	300	641	16	160

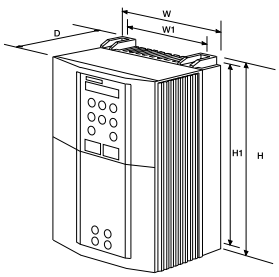

Frame B,C,D,E,F

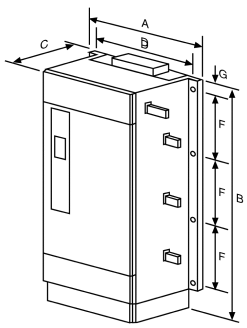

Frame G,H,J

605

0.75 to 15kW

The unique Function Block Programming control scheme of the 605 series provides the total control flexibility required for the most demanding ac drive applications, whilst ensuring less onerous schemes can be simply satisfied straight from the box. In addition the ultra high performance sensorless vector algorithm guarantees a combination of high torque, low speed running.
The 605 series is available for use on single or three phase supplies and covers ratings from 0.75 to 15kW.

High torque sensorless vector performance

Function Block Programming

CE Marked and EMC compliant with internal filters

Fieldbus protocol interfaces

Intelligent Power Module (IPM) technology

Single or three phase supply

Parameter Cloning

TECHNICAL SPECIFICATION

Power Supply – 220-240V ±10% single or three phase and 380-460V±10% Three phase, 50-60Hz ±5%

Ambient – 0-45°C, (40°C with NEMA 1 cover fitted) up to 1000m ASL without derating

Overload – 200% for 0.5 seconds, 150% for 60 seconds

Output Frequency – 0-480Hz

Environmental Protection – IP20–(NEMA 1 with optional cover)

FEATURES

6051 Programming/Control Module

Detachable for 605 or front control panel mounting
32 character multi-lingual display
Wide viewing angle back lit LCD
Easy to use menu structure programming
Local control of speed, forward/reverse, run/stop and jog
Selectable first-up display
LED status indication
Password and function lock-out security
Parameter Cloning

User Facilities

Sensorless vector autotune
Internal serial communication 'Technology Box'
Standard user application macros
Linear or 'S' ramps
Raise/lower ramp (digital MOP)
Ramp/coast/injection selectable braking modes
Selectable dual process ramps and program stop
Selectable switching frequency (with quiet pattern algorithm)
Local/remote select
8 - pre set speeds
4 - skip frequencies
Internal brake switch
Jog input
Process PID control
Spinning load 'flycatching' controlled start
Selectable auto restart after trip
Slip and underlap compensation
Fast connection spring loaded control terminals
Configurable inputs/outputs with function block programming

2 analogue inputs	1 analogue output
5 digital inputs	2 digital outputs

Telephone: **01903 737000** Fax: **01903 737100**

Single Phase Controllers (230V Nominal)

Type	Nominal Power (kW)	Output Current (A)	Package size
605/007/230/1	0.75	4.0	A
605/015/230/1	1.5	7.0	A
605/022/230/1	2.2	10.5	B

Three Phase Controllers (400V Nominal)

Type	Constant Torque Rating with 150% Overload for 60s		Quadratic 'Fan Law' Torque Rating with 110% Overload for 10s		
	Nominal Power (kW)	Output Current A	Nominal Power (kW)	Output Current A	Package Size
605/007/400/3	0.75	2.5	-	-	B
605/015/400/3	1.5	4.5	-	-	B
605/022/400/3	2.2	5.5	-	-	B
605/040/400/3	4.0	9.5	-	-	B
605/0055/400	5.5	12	7.5	16	C
605/0075/400	7.5	16	11	23	C
605/0110/400	11	23	15	31	C

Three Phase Controllers (230V Nominal)

605/007/230/3	0.75	4.0	-	-	A
605/015/230/3	1.5	7.0	-	-	A
605/022/230/3	2.2	10.5	-	-	B
605/040/230/3	4.0	16.5	-	-	B

Options

6051 Programming/Control Module		
6052 Remote Mounting Bezel and 3m Lead		
Communication Technology Boxes	605A and B	605C
Profibus	6053/PROF	6055/PROF
Modbus/RS422/RS485/EIBisynch	6053/EI00	6055/EI00
Link	6053/LINK	6055/LINK
Devicenet	6053/DNET	6055/DNET
Encoder feedback	AH467407 U001 (Board)	6054/HTTL
CZ389853 Brake Resistor (100W)		
CZ463068 Brake Resistor (200W)		
ConfigEd Lite+ 'windows' graphical configuration software (see page 38)		

Full range of optional EMC filters and line chokes see pages 34/35.
Brake resistor details see page 33.

Dimensions

Package Type	W	H	D	W1	W2	D1	Weight (Kg)
A	155	198	154.5	109	114	173.5	3.0
B	177	233	181	129	129	223	4.3
C	201	365	208	150	150	335	8.8

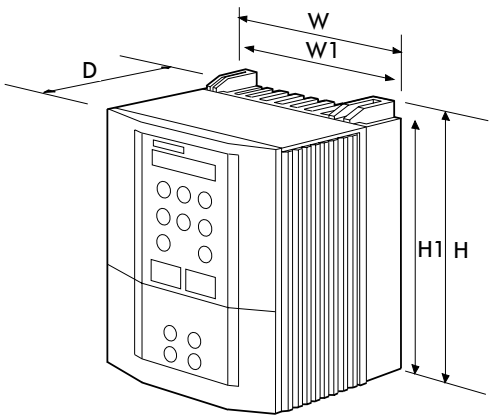

W2 Lower Mounting Centres

STANDARDS

CE marked
EN61800-3 with integral filter (frame A&B) or external filter (frame C)
EN50178 (safety, low voltage directive)
UL listed to US and c UL us listed to Canadian safety standards

FASTPACK AC Enclosed Inverters and Vector Drives

0.37 to 355kW

FASTPACK AC is a range of single and three phase inverters and vector drives housed in electrical cabinets together with associated control equipment ready for immediate installation. Pre-engineered options and stocked part base built enclosures enable the FASTPACK range to be offered on short deliveries at very economical cost.

TECHNICAL SPECIFICATION

Sheet steel electrical enclosure finished in RAL7032

- Drive Module including internal emc filtering to EN61800-3 and drive mounted operator display
- Ventilation cooling fans and filters where rating requires
- Standard options specified

Options

Door mounted operator display
Door interlocked mains isolator
Circuit breaker
Start/stop push buttons or switches
Inch push buttons
Single or multi-turn potentiometer
Analogue or digital load meter
Analogue or digital speed meter
Emergency stop (Category 1)
Stainless steel or non-standard RAL paint
Oversize enclosure for customers use
Special options

READY TO INSTALL COMPLETE SYSTEMS

RATINGS UP TO 355kW

COMPREHENSIVE RANGE OF CONTROL OPTIONS

SINGLE OR THREE PHASE OPTIONS

EXTREMELY SHORT DELIVERY TIME

CE MARKED TO EN60204 (1994)

650/650V SERIES AC FASTPACK 220-240V SINGLE PHASE

Nominal Power (kW)	Output) Current (A)	Standard Cabinet Size HxWxD
0.25	1.5	300x300x210
0.37	2.2	300x300x210
0.55	3.0	300x300x210
0.75	4.0	300x300x210
1.1	5.5	400x300x210
1.5	7.0	400x300x210

380-460V Three Phase

Nominal Power (kW)	Output) Current (A)	Standard Cabinet Size HxWxD
0.37	1.5	400x300x210
0.55	2.0	400x300x210
0.75	2.5	400x300x210
1.1	3.5	400x300x210
1.5	4.5	400x300x210
2.2	5.5	400x300x210
3	6.8	500x400x260
4	9.0	500x400x260
5.5	12.0	500x400x260
7.5	16.0	500x400x260
11 (15)	23 (31)	600x380x350
15 (18)	31 (38)	600x380x350
18 (22)	38 (45)	760x600x350
22 (30)	45 (59)	760x600x350
30 (37)	59 (73)	760x600x350
37 (45)	73 (87)	1200x600x400
45 (55)	87 (105)	1200x600x400
55 (75)	105 (145)	1600x600x500
75 (90)	145 (165)	1600x600x500
90 (110)	180 (205)	1600x600x500

690+ SERIES AC FASTPACK 220-240V SINGLE PHASE

Nominal Power kW)	Output) Current (A)	Standard Cabinet Size HxWxD
0.75	4.0	500x400x260
1.5	7.0	500x400x260
2.2	10.5	500x400x260

380-460V THREE PHASE

Nominal Power (kW)	Output) Current (A)	Standard Cabinet Size HxWxD
0.75	2.5	500x400x260
1.5	4.5	500x400x260
2.2	5.5	500x400x260
4	9.5	500x400x260
5.5	12	500x400x260
7.5	16	600x380x350
11 (15)	23 (31)	600x380x350
15 (18)	31 (38)	600x380x350
18 (22)	38 (45)	760x600x350
22 (30)	45 (59)	760x600x350
30 (37)	59 (73)	760x600x350
37 (45)	73 (87)	1200x600x400
45 (55)	87 (105)	1200x600x400
55 (75)	105 (145)	1600x600x500
75 (90)	145 (165)	1600x600x500
90 (110)	180 (205)	1600x600x500

Figures in brackets are quadratic (fan) torque ratings

Please refer to your Eurotherm Drive Sales contact for higher powers to 355kW

Telephone : **01903 737000** Fax : **01903 737100**

631
1 to 6A

The 631 is much more than a basic brushless servo drive. With built-in motion controller, emc compliant filter, PLC functionality and even extended I/O option, it's a complete positioning system in a single module. The 631 is designed for direct connection to a 230Vac single phase supply without the need for any interposing transformer.

TECHNICAL SPECIFICATION

Power Supply – 220-240Vac (±10%)
Single Phase
Ambient – 0-40°C (derate 2%/°C >40°C to 50°C max.)
1000m ASL (derate 1%/100m to 4000m max.)

Type	Output Current Continuous (A)	Output Current Peak (A)
631-001-230-F-0	1.0	2.0
631-002-230-F-0	2.0	4.0
631-004-230-F-0	4.0	8.0
631-006-230-F-0	6.0	12.0

Inputs/Outputs

4 - Configurable Digital Inputs (24V)
2 - Configurable Digital Outputs (24V)
1 - Analogue Input
Optional I/O Expander Module
  8 - Configurable Digital Inputs/Outputs (max. 4 outputs)
CANbus Input and Output
Resolver Feedback Input
Pulse Train Input and Output

Dimensions		
H	W	D*
183	72.0	175

Fixings: Mounting holes 5.5mm – use M5 fixings.
*45mm must be allowed for connectors.

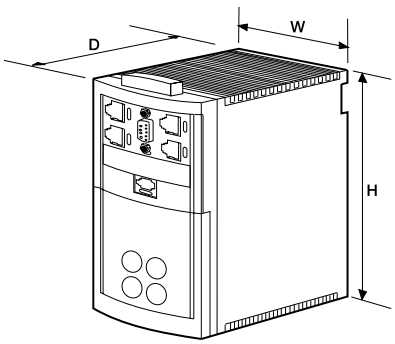

STANDARDS

CE marked
EN61800-3 (EMC compliance) with integral filter
EN60178 (safety, low voltage)
UL listed to US and c UL us listed to Canadian safety standards

1500 Step Integral Motion Controller
Integral EMC Compliant Filters
Integral Brake Switch
Direct 230V ac Supply Connection
Simulated Encoder Output
DIN Rail or Direct Panel Mount

635/637+

1 to 30A

635/637
Torque, speed, position or motion control are all standard operations of the 635/637+ series ac brushless servo drive – without the need for external controllers. Each has its own internal power supply for direct connection to either 230V or 400V ac supplies and is available as part of a total servo package including motors, servo gearboxes and interconnecting cables.
The 635/637+ is available as either individual compact modules or as rack mounted assemblies with up to 9 drives in a single rack.

1500 Step Internal Motion Controller

Direct Connection to 230V or 400V AC Supplies

Module or Rack Mounted

Simple Commissioning and Programming Software

Complete Package of Motors, Servo Gearboxes and Interconnecting Cables

Fieldbus Communication Options

TECHNICAL SPECIFICATION

635 Series

Power Supply – 220 - 230V (±10% single or three phase up to 7A, three phase only 10A) 50 - 60 Hz ±5%

Type	Output Current Continuous (A)	Output Current Peak (A)
635-K DER 01	1.0	5.0
635-K DER 03	2.5	5.0
635-K DER 05	5.0	10
635-K DER 07	6.5	10
635-K DER 10	10	20

637 Series

Power Supply – 380 - 460V (±10% three phase)

Type	Output Current Continuous (A)	Output Current Peak (A)
637+K D6R 01-7	1.0	4.0
637+K D6R 02-7	2.0	4.0
637+K D6R 04-7	4.0	8.0
637+K D6R 06-7	6.0	12
637+K D6R 10-7	10	20
637+K D6R 16-7	16	32
637+K D6R 22-7	22	44
637+K D6R 30-7	30	60

Peak Output Current – Stated peak output currents are for a minimum 5 seconds
Ambient – 0 - 40°C (Derate 2%/°C up to 50°C max) Up to 1000m ASL (Derate 1%/100m up to 4000m max)

Inputs/Outputs

8 - Digital Inputs (inc 2 interrupts)
5 - Digital Outputs (3 x Opto-coupled, 2 x Relay)
2 - Analogue Inputs (-10V / 0 / +10V)
1 - Analogue Output (0 - 10V)
Motor Resolver Input
Encoder (Configurable Input or Output)

Serial Communication Options

RS232
RS422
RS485
CANbus
Sin/Cos Encoder Option
PROFIBUSDP
INTERBUS S
SUCOnet K

Input/Output Expansion Options

635 – Additional 5 Digital Inputs/2 Digital Outputs
637+ – Additional 14 Digital Inputs/10 Digital Outputs

Dimensions

		A	B	C
635	1 to 6.5 Amps	91	249	216.5
635	10 Amps	106.3	249	216.5
637	1 to 10 Amps	61.5	400	280
637	16 to 30 Amps	104	400	280

Allow extra 70mm in front of unit for plugs/cables.

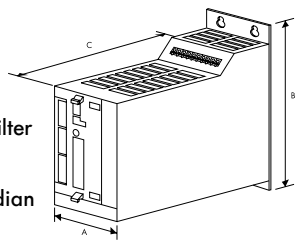

STANDARDS

CE marked
EN61800-3 (EMC compliance) with external filter
EN50178 (safety, low voltage directive)

UL listed to US and c UL us listed to Canadian safety standards

Telephone: **01903 737000** Fax: **01903 737100**

631 and 635/637+
1 to 6A

SERVO DRIVES

631 and 635/637+ Ancillary Equipment

Part Number	Description
CABLES / CONNECTORS	
Complete cable sets with connectors ready fitted at motor and drive end	
CM469021Uxx0	Drive to ACG/ACM2n motor POWER. Non repetitive flexing, no brake core
CM469023Uxx0	Drive to ACG/ACM2n motor POWER. Repetitive flexing, with brake core
CM469095Uxx0	Drive to ACR(L) size 4 motor POWER. Repetitive flexing, with brake core
CM469025Uxx0	Drive to ACG/ACM2n/ACR(L) RESOLVER. Non repetitive flexing
CM469027Uxx0	Drive to ACG/ACM2n/ACR(L) RESOLVER. Repetitive flexing
xx = Complete cable set length; Standard lengths 2, 5, 10m. eg CM469021U050 = 5m length	
Loose Cable (no connectors)	
CM469020	Drive to ACG/ACM2n motor POWER. Non repetitive flexing, no brake core
CM469022	Drive to ACG/ACM2n motor POWER. Repetitive flexing, with brake core
CM469094	Drive to ACR(L) size 4 motor POWER. Repetitive flexing with brake core
CM469024	Drive to ACG/ACM2n/ACR(L) RESOLVER. Non repetitive flexing
CM469026	Drive to ACG/ACM2n/ACR(L) RESOLVER. Repetitive flexing
Loose Connectors	
CI469039	Motor POWER CONNECTOR for ACG/ACM2n (size 0-3)
	Motor POWER CONNECTOR for ACR(L)
CI467068	Motor RESOLVER CONNECTOR for ACG/ACM2n/ACR(L)
	X10 I/O Drive Connector for 635/7
	X30 Resolver Drive Connector for 635/7
	X40 Encoder Drive Connector for 635/7
	COM 2 Communications Drive Connector for 635/7
LA467063	Package X10,X30,X40 and COM 2 Drives Connectors for 635/7
LA467064	X10 Test adaptor connector for 635/7
631 Interconnection Cables/Connectors	
CM469036U001	631 X20-X20 or X40-X40 100mm interconnecting cable with connectors both ends
CM469029U010	631 X20 1m cable (4 core) with drive connector one end
CM469033U010	631 X40 1m cable (8 core) with drive connector one end
CM469031U003	631 X20 to 635/637/IBT MMI 300mm interconnecting cable with connectors both ends
CI469030	631 X20 CANbus terminator plug
CM469034U003	631 X40 to 635/7 X40 300mm interconnecting cable with connectors both ends
635/637+ COMMUNICATION AND EXTENDED I/O OPTION BOARDS	
AH467059U001	Profibus DP (Factory fit only)
AH467059U002	CANbus RP
AH467059U003	Devicenet (Factory fit only)
AH467059U004	Suconet K (Factory fit only)
AH467059U005	RS232
AH467059U006	RS485
AH467059U007	RS422
AH467059U008	Interbus S (Factory fit only)
	635 5 Inputs / 2 Outputs Expansion board
	637 14 Inputs / 10 Output Expansion board
CANBUS ANCILLARY EQUIPMENT	
LA469119	8 Channel I/O Expansion Module
LA469118	BCD Switch Module - 6 Digit
	BCD Switch Module - 5 Digit plus sign
LA469121	BCD Switch Module - 6 Digit with 6 digit LED readout
	BCD Switch Module - 5 Digit plus sign with 6 digit LED readout
635/637+ EMC EQUIPMENT (NB 631 Series has internal RFI filters)	
CO467071	12A 230V 1 phase RFI filter
CO467072	8A 480V 3 phase RFI filter
CO467557	18A 480V 3 phase RFI filter
CO467580	34A 480V 3 phase RFI filter
LA467069	635 (KDER03...07) Cable clamp kit
	635 (KDER10) Cable clamp kit
LA467070	637 (KD6R02...10) Cable clamp kit
	635 (KD6R16...30) Cable clamp kit
SOFTWARE AND ASSOCIATED HARDWARE	
LA469099U002	631 EASYRIDER 'Windows' Software Development Kit including
LA387599	– PC to 631 Programming cable
RD467061U006	– EASYRIDER Software disc
HA467060	– BIAS Programming manual
LA469102U002	635/637 EASYRIDER Software Development Kit including
CM467062	– PC to 635/7 Programming cable
RD467061U006	– EASYRIDER Software disc
HA467060	– BIAS Programming manual
LA467064	– X10 Test adaptor plug
MMI (MAN MACHINE INTERFACE)	
	4 x 20 Character IBT MMI
	MMI to 635/7 2m Interconnecting cable with connectors
	MMI to PC 2m Programming Cable
	MMI Programming Software

AC Brushless Servo Motors

0.3 to 88Nm

A complete range of high performance, low inertia, ac brushless servo motors. These are compatible with the 631/635 series (230Vac) and 637+ series (400Vac) servo drives – details on pages 9-10. The ACG range offers tremendous value while the ACM2n/ACR range can accommodate a wide variety of options to suit virtually any application at a cost effective price.

- Neodymium iron boron magnets
- Up to 4 times rated current
- Low inertia - high dynamic response
- Integral resolver
- Plug/socket connectors

Technical Specification

Motors for use with 631/635 (nominal 230V AC supplies)

Motor Type	Motor Size	Stall Torque M_0 Cont. (Nm)	Stall Current I_0 Cont. (A)	Rated Torque M_N (Nm)	Rated Current I_N (A)	Maximum Mechanical Speed (rpm)	Inertia J_M (Kgcm²)	Mass (Kg)
ACG								
ACG0060-4/01-3	01.1	0.7	1.25	0.6	1.15	4000	0.33	1.8
ACG0090-4/01-3	01.2	1.1	2.0	0.9	1.75	4000	0.51	2.0
ACG0170-4/01-3	01.3	2.1	3.8	1.7	3.28	4000	1.0	3.0
ACG0190-4/01-3	01.4	2.6	4.9	1.9	3.70	4000	1.5	3.9
ACM2n								
ACM2n 0012-6/Y-3	Y	0.16	0.46	0.12	0.40	6000	0.06	0.63
ACM2n 0010-4/0-3	0	0.13	0.25	0.10	0.20	4000	0.05	0.83
ACM2n 0030-4/0-3	0	0.30	0.90	0.30	0.80	4000	0.10	1.3
ACM2n 0045-4/0-3	0	0.50	1.20	0.45	1.08	4000	0.15	1.4
ACM2n 0070-4/0-3	0	0.8	1.6	0.7	1.46	4000	0.20	1.7
ACM2n 0130-4/0-3	0	1.5	3.3	1.3	2.80	4000	0.33	2.8
ACM2n 0055-4/1-3	1	0.8	2.1	0.55	1.40	4000	0.3	2.0
ACM2n 0090-4/1-3	1	1.5	3.0	0.9	1.80	4000	0.68	2.7
ACM2n 0150-4/1-3	1	2.5	5.0	1.5	3.30	4000	1.0	3.5
ACM2n 0220-4/1-3	1	3.0	6.4	2.2	4.70	4000	1.4	4.1
ACM2n 0320-4/2-3	2	4.0	8.2	3.2	6.40	4000	2.4	6.7
ACM2n 0480-4/2-3	2	7.0	14.3	4.8	9.80	4000	3.2	8.2

Motors for use with 637 (nominal 400V AC supplies)

Motor Type	Motor Size	Stall Torque M_0 Cont. (Nm)	Stall Current I_0 Cont. (A)	Rated Torque M_N (Nm)	Rated Current I_N (A)	Maximum Mechanical Speed (rpm)	Inertia J_M (Kgcm²)	Mass (Kg)
ACM2n 0045-4/0-6	0	0.5	0.65	0.45	0.60	4000	0.15	1.4
ACM2n 0070-4/0-6	0	0.8	0.9	0.7	0.82	4000	0.20	1.7
ACM2n 0130-4/0-6	0	1.5	1.65	1.3	1.4	4000	0.33	2.8
ACM2n 0055-4/1-6	1	0.8	1.2	0.55	0.85	4000	0.30	2.0
ACM2n 0090-4/1-6	1	1.5	1.8	0.9	1.1	4000	0.68	2.7
ACM2n 0150-4/1-6	1	2.5	2.7	1.5	1.9	4000	1.0	3.5
ACM2n 0220-4/1-6	1	3.0	3.8	2.2	2.8	4000	1.4	4.1
ACM2n 0320-4/2-6	2	4.0	4.5	3.2	3.6	4000	2.4	6.7
ACM2n 0480-4/2-6	2	7.0	7.2	4.8	4.9	4000	3.2	8.2
ACM2n 0650-4/2-6	2	9.0	9.2	6.5	6.6	4000	3.6	10.5
ACM2n 0960-4/3-6	3	16	18.4	9.6	11	4000	5.3	19.5
ACM2n 1200-4/3-6	3	21	28	12	16	4000	6.7	23
AC R 1500-2/4-6	4.1	25	11.5	15	6.9	2000	100	26
AC R 2400-2/4-6	4.2	40	18.4	24	11.1	2000	150	32
AC R 3800-2/4-6	4.3	63	29.0	38	17.4	2000	230	44
AC RL 5300-2/4-6	4.3	88	38.9	53	23.1	2000	230	46
AC RL 5300-1/4-6	4.3	88	19.8	62	13.5	1000	230	46

Telephone: **01903 737000** Fax: **01903 737100**

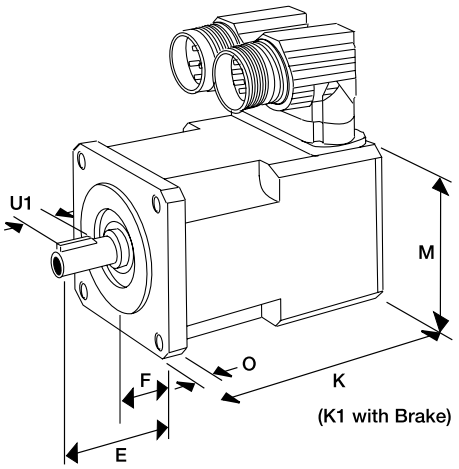

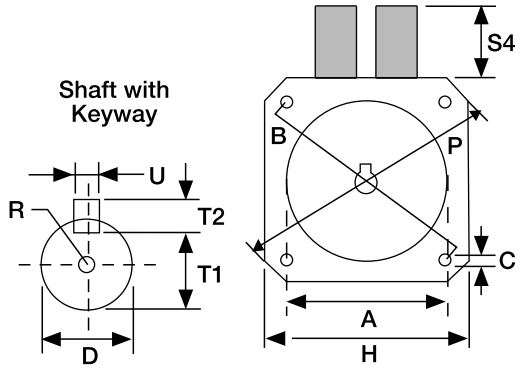

Dimensions

	A (j6)	B	C	D (k6)	E	F	H	K	K1	M	O	P	R	S4	T1	T2 (h9)	U (h9)	U1
Type ACG																		
ACG 0060	60	75	5.5	11	23	2.5	70	140	n/a	70	9	92	M3-12	40	8.5	4	4	14
ACG 0090	60	75	5.5	11	23	2.5	70	150	n/a	70	9	92	M3-12	40	8.5	4	4	14
ACG 0170	60	75	5.5	11	23	2.5	70	180	n/a	70	9	92	M3-12	40	8.5	4	4	14
ACG 0190	60	75	5.5	11	23	2.5	70	210	n/a	70	9	92	M3-12	40	8.5	4	4	14
Type ACM2n																		
ACM2n 0010	40	63	5.8	9	24	2.5	55	98	131	55	8	74	M3-10	40	7.2	3	3	14
ACM2n 0030	40	63	5.8	9	24	2.5	55	123	156	55	8	74	M3-10	40	7.2	3	3	14
ACM2n 0045	40	63	5.8	9	24	2.5	55	143	176	55	8	74	M3-10	40	7.2	3	3	14
ACM2n 0070	40	63	5.8	9	24	2.5	55	163	196	55	8	74	M3-10	40	7.2	3	3	14
ACM2n 0130	40	63	5.8	9	24	2.5	55	234	267	55	8	74	M3-10	40	7.2	3	3	14
ACM2n 0055	80	100	7	14	30	3	88	112	153	82	10	115	M4-12	40	7.2	5	5	20
ACM2n 0090	80	100	7	14	30	3	88	132	173	82	10	115	M4-12	40	11.1	5	5	20
ACM2n 0150	80	100	7	14	30	3	88	152	193	82	10	115	M4-12	40	11.1	5	5	20
ACM2n 0220	80	100	7	14	30	3	88	172	213	82	10	115	M4-12	40	11.1	5	5	20
ACM2n 0320	95	115	9	19	40	3	105	178	218	105	12	134	M6-15	40	15.5	6	6	30
ACM2n 0480	95	115	9	19	40	3	105	208	248	105	12	134	M6-15	40	15.5	6	6	30
ACM2n 0650	95	115	9	19	40	3	105	228	268	105	12	134	M6-15	40	15.5	6	6	30
ACM2n 0960	130	165	11	24	50	3.5	145	260	303	145	12	188	M8-25	40	19.9	8	8	40
ACM2n 1200	130	165	11	24	50	3.5	145	300	343	145	12	188	M8-25	40	19.9	8	8	40
Type ACR																		
ACR 1500	180	215	14	32	58	4	185	350	350	187	13	250	M10-25	21*	27.3	8 (h11)	10(h11)	50
ACR 2400	180	215	14	32	58	4	185	395	395	187	13	250	M10-25	21*	27.3	8 (h11)	10(h11)	50
ACR 3800	180	215	14	32	58	4	185	470	470	187	13	250	M10-25	21*	27.3	8 (h11)	10(h11)	50
Type ACRL																		
ACRL 5300	180	215	14	32	58	4	185	583	583	187	13	250	M10-25	21*	27.3	8 (h11)	10(h11)	50

*Motor type ACR(L) has vertical non-rotateable sockets.

Ordering Information

When ordering, please specify the motor type number.
Motor type AC RL has force ventilation unit.

Parvex Series

The Parvex servo drive range offers an extremely wide choice of both ac brushless and dc brushed servo motors and compatible drives. These are available in torque ratings from 0.3 to 320Nm and ideally suited for both standard and specialist servo applications across all industries.

Digivex DSD/DSM

Type	AC Supply (Vac ±10%)	Output Current Continuous (A)	Output Current Peak (A)
DSD or DSM 13M02	230V 50/60Hz Single Phase	2.0	4.0
DSD or DSM 13M04		4.0	8.0
DSD or DSM 13M07		7.5	15
DSD or DSM 13004	230V 50/60Hz Three Phase	4.0	8.0
DSD or DSM 13007		7.5	15
DSD or DSM 13015		15	30
DSD or DSM 13030		30	60
DSD or DSM 13060		60	100
DSD or DSM 16002	400V 50/60Hz Three Phase	2.0	4.0
DSD or DSM 16004		4.0	8.0
DSD or DSM 16008		8.0	16
DSD or DSM 16016		16	32
DSD or DSM 16032		32	64

Digivex DMD/DMM

Type	Output Current Continuous (A)	Output Current Peak (A)	Module Space
DMD or DMM 06002	2.0	4.0	Single
DMD or DMM 06004	4.0	8.0	Single
DMD or DMM 06008	8.0	16	Single
DMD or DMM 06016	16	32	Double
DMD or DMM 06032	32	64	Triple
Power Supply Type	**AC Supply (Vac ±10%)**	**Continuous DC Bus Current (A)**	
DPS0612	400V 50/60Hz	25	
DPS0625	Three Phase	50	

Digivex DPD/DPM

Type	Output Current Continuous (A)	Output Current Peak (A)
DPD or DPM 17050	50	80
DPD or DPM 17100	100	120
DPD or DPM 17150	150	150
DPD or DPM 17200	200	200
DPD or DPM 17300	300	300

Digivex Brushless Servo Drive Series

Digivex is a family of high performance digital brushless servo drives available in continuous ratings from 2 to 300A. They are suitable for either speed control (DSD, DPD, DMD) or position/motion control (DSM, DPM, DMM).

Digivex DSD/DSM

- Single Axis integrated power supply
- Direct connection to 230V or 400V AC supply
- Up to 16,384 line simulated encoder output
- 26 I/O Interface
- CANbus Interface
- Plug-in non-volatile memory module

Digivex DMD/DMM

- Rack mounted multi-axis system
- Plug-in drive module and common power supply
- Direct connection to 400V AC supply
- 3 or 6 module racks
- Integral regenerative braking circuits
- Ratings 2 - 32Amps

Digivex DPD/DPM

- High power brushless servo drive
- Ratings up to 300Amps
- Regenerative into AC supply
- Direct 400-480V AC supply
- "H" series motors up to 120kW

Telephone: **01903 737000** Fax: **01903 737100**

LX/NX Brushless Servo Motors – for use with DIGIVEX 230Vac Drives

Motor Type	DIGIVEX Drive Module Rating I (Amps)	Static Torque Mo (Nm)	Continuous Current Io (Amps)	Maximum Speed Nmax (rpm)	Inertia J (kg.cm²)
LX 210BW	2/4	0.28	1.30	6500	0.18
LX220BT	2/4	0.58	1.75	6200	0.33
NX310EAP	2/4	2.0	2.00	2300	0.79
NX310EAK	4/8	2.0	3.49	4000	0.79
NX420EAP	4/8	4.0	3.98	2300	2.9
NX420EAJ	7.5/15	4.0	6.90	4000	2.9
NX430EAJ	7.5/15	5.5	7.41	3200	4.26
NX430EAF	15/30	5.5	9.39	4000	4.26
NX620EAR	7.5/15	8.0	7.48	2200	9.8
NX620EAJ	15/30	8.0	13.9	4000	9.8
NX630EAK	15/30	12	15.0	2800	14.7
NX630EAG	30/60	12	21.1	4000	14.7
LX820DH	30/60	19	27.6	2800	23
LX820DH	60/100	19	36.8	3800	23
LX840DG	30/60	38	29.6	1600	42
LX840DE	60/100	38	41.4	2200	42
*LX820VK	30/60	28	29.8	2000	23
*LX820VF	60/100	28	54.6	3800	23
*LX840VE	60/100	54	59.7	2200	42

* = Force air cooled motor

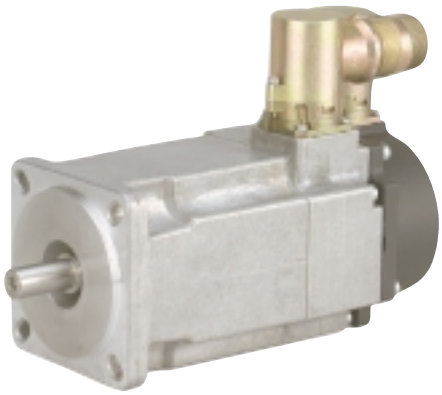

HX/NX Brushless Servo Motors – for use with DIGIVEX 400Vac Drives

Motor Type	DIGIVEX Drive Module Rating I (Amps)	Static Torque Mo (Nm)	Continuous Current Io (Amps)	Maximum Speed Nmax (rpm)	Inertia J (kg.cm²)
NX310EAP	2/4	2.0	2.00	4000	0.79
NX420EAV	2/4	4.0	2.00	2000	2.9
NX420EAP	4/8	4.0	3.98	4000	2.9
NX430EAP	4/8	5.5	3.99	3000	4.26
NX430EAL	8/16	5.5	5.35	4000	4.26
NX620EAV	4/8	8.0	3.98	2000	9.8
NX620EAR	8/16	8.0	7.48	3900	9.8
NX630EAR	8/16	12	7.96	2700	14.7
NX630EAN	16/32	12	12.0	4000	14.7
HX820DT	8/16	19	7.89	1500	23.0
HX820DN	16/32	19	15.8	3100	23.0
HX820DJ	32/64	19	22.1	4200	23.0
HX840DN	16/32	38	14.8	1500	42.0
HX840DH	32/64	38	25.9	2600	42.0
*HX820VK	32/64	28	29.8	4000	23.0
*HX820VH	50/80	28	41.0	5000	23.0
*HX840VJ	32/64	55	30.5	2100	42
*HX840VG	50/80	55	43.5	3100	42
*HX840VG	100/120	55	43.5	3100	42
*HXA30VI	100/120	170	98.8	2000	270
*HXA40VI	100/120	228	99.6	1400	350
*HXA40VG	150	230	130	1900	350
*HXA40VF	200	230	182	2700	350
*HXA50VF	150	280	146	1800	430
*HXA50VE	200	280	175	2150	430
*HXA60VF	150	320	136	1450	510
*HXA60D	200	315	199	2200	510

* = Force air cooled motor

DC DRIVES

506/507/508

Up to 2kW

The 506, 507 and 508 series drives break new ground in value for money dc motor control. Available in 3, 6 or 12A armature ratings, the feature packed minimum footprint design is ideal for speed or torque control of permanent magnet or shunt wound dc motors from single phase supplies.

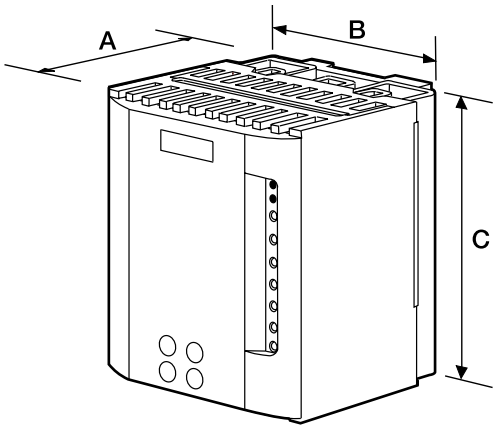

LOW COST/HIGH FEATURE DESIGN

COMPACT MINIMAL FOOTPRINT CONSTRUCTION

IP20 PROTECTED COVERS

DIN RAIL MOUNTING

SWITCH SELECTABLE 110V OR 230V SUPPLY

SWITCH SELECTABLE TACHO OR ARMATURE VOLTAGE FEEDBACK

TECHNICAL SPECIFICATION

Power Supply – 110-120V, or 220-240V ±10% single phase 50-60Hz ±5%
Ambient – 0-45°C, up to 1000m ASL without derating

FEATURES

User Facilities

IP20 Protected covers
DIN rail mounting
Torque and speed control
2A dc field output
Internal 15 second stall detect
Internal electronic overcurrent protection
Zero speed and drive healthy signal
Main and trim setpoint input
Independent acceleration and deceleration ramps
LED diagnostics

Potentiometer Adjustments

Maximum speed
Minimum speed
Current limit
Speed stability
Acceleration ramp (1-15 seconds)
Deceleration ramp (1-15 seconds)
IR compensation

Switch Selectable Features

Supply voltage 110/120V or 220/240V
Tachogenerator/armature voltage feedback
Speed calibration
Current calibration

Type	Armature Current Adc	Nominal Supply Voltage Vac	Armature Voltage Vdc	Field Voltage Vdc
506	0-3	110-120	90	100
506	0-3	220-240	180	210
507	0-6	110-120	90	100
507	0-6	220-240	180	210
508	0-12	110-120	90	100
508	0-12	220-240	180	210

Options

LA054664	506 Fuse Kit
LA054664	507 Fuse Kit
LA050062	508 Fuse Kit
LA050063	Potentiometer Kit

EMC filters see pages 34/35.

Dimensions

	A	B	C	Weight (Kg)
506	80	105	140	0.59
507	80	105	140	0.59
508	90	105	140	0.70

STANDARDS

CE marked
EN61800-3 (EMC compliance) with external filter
EN50178 (safety, low voltage directive)
UL listed to US and c UL us listed to Canadian safety standards

Telephone: 01903 737000 Fax: 01903 737100

512C
Up to 9kW

Isolated control circuitry, a host of user facilities and extremely linear control loop make the 512C ideal for single motor or multi drive low power applications. Designed for use on single phase supplies, the 512C is suitable for controlling permanent magnet or wound field dc motors in speed or torque control.

TECHNICAL SPECIFICATION

Power Supply – 110-115V, 220-240V or 380-415V ±10% user selectable, single phase 50-60Hz ±5%
Ambient – 0-40°C, up to 1000m ASL without derating
Overload – 150% for 60 seconds

FEATURES

User Facilities

Link selection of ac supply voltage
Torque or speed control
3A dc field output
Power on overcurrent and stall detect LEDs
MOV transient suppression
Buffered speed output (10V, 10mA)
Buffered current output (7.5V, 10mA)
Buffered ramp output (master/slave)
10V dc reference supply (10mA)
Total setpoint off
Health output
Zero speed/zero setpoint output

Potentiometer Adjustments

Maximum speed
Minimum speed
Current limit
Acceleration ramp (1-80 seconds)
Deceleration ramp (1-80 seconds)
IR compensation
Speed stability

Nominal Supply Voltage Vac	Armature Voltage Vdc	Field Voltage Vdc
110	90	100
240	180	210
415	320	360

Type	Armature Current
512C/040	4
512C/080	8
512C/160	16
512C/320	32

Options

Product No.	Type	Descriptions
LA057605U012	512C/040	Single Phase Fuse Kit
LA057605U016	512C/080	Single Phase Fuse Kit
LA057605U032	512C/160	Single Phase Fuse Kit
LA057605U050	512C/320	Single Phase Fuse Kit
LA050063		Potentiometer Kit

EMC filters see page 34/35.

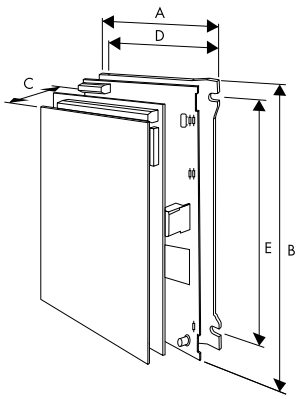

Dimensions

Type	A	B	C	D	E	Weight (kg)
512C/040, 080 or 160	160	240	85	148	210	1.5/1.6/1.6
512C/320	160	240	123	148	210	2.9

STANDARDS

CE marked
EN61800-3 (EMC compliance) with external filter
EN50178 (safety, low voltage directive)
UL listed to US and c UL us listed to Canadian safety standards

FULLY ISOLATED CONTROL CIRCUITS
110V – 415V AC SUPPLY SELECTION
CE MARKED AND EMC COMPLIANT
MULTI INPUT SPEED AND CURRENT SETPOINTS
ZERO SPEED AND HEALTH OUTPUT
EXTREMELY LINEAR CONTROL LOOPS

514C

Up to 9kW

The regenerative 514C dc thyristor drive offers full four quadrant control of dc motors from single phase supplies. As such it is ideal for applications involving overhauling loads or where rapid and accurate deceleration is required. Together with the non-regenerative 512C they offer the perfect solution for lower power single motor and multi-drive applications.

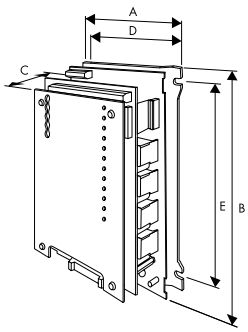

FOUR QUADRANT REGENERATIVE CONTROL

110-500V AC SUPPLY SELECTION

CE MARKED AND EMC COMPLIANT

AC POWER CONTACTOR LOGIC AND SUPPLY

MANY SYSTEM FEATURES

EXTREMELY LINEAR CONTROL LOOPS

TECHNICAL SPECIFICATION

Power Supply – Main supply; 110-500V ±10% user selectable.
Auxiliary supply; 110/120 or 220/240V ±10% user selectable.
Single phase 50-60Hz ±10%
Ambient – 0-40°C, up to 1000m ASL without derating
Overload – 150% for 60 seconds

FEATURES

User Facilities

Four quadrant regenerative control
Separate ac auxiliary supply
ac supply contactor logic
5570 diagnostic compatible
Torque or speed control
Buffered speed output (10V, 10mA)
Buffered ramp output (10V, 10mA)
Buffered total setpoint output (10V, 10mA)
Buffered current output (10V, 10mA)
Three setpoint inputs
Torque limit input
+10V and -10V analogue reference supplies
+24V digital reference supply
Health output
Zero speed/zero setpoint output

Potentiometer Adjustments

Maximum speed
Current limit
Acceleration ramp (0-40 seconds)
Deceleration ramp (0-40 seconds)
IR compensation
Speed loop gain – proportional
Speed loop gain – integral
Current gain – proportional
Current gain – integral
Zero speed offset
Zero speed threshold

Nominal Supply Voltage Vac	Armature Voltage Vdc	Field Voltage Vdc
110	90	100
240	180	210
415-500	320	360

Type	Armature Current
514C/04	4
514C/08	8
514C/16	16
514C/32	32

Options

Product No.	Type	Descriptions
LA057605U012	514C/04	Single Phase Fuse Kit
LA057605U016	514C/08	Single Phase Fuse Kit
LA057605U032	514C/16	Single Phase Fuse Kit
LA057605U050	514C/32	Single Phase Fuse Kit
LA050063		Potentiometer Kit

EMC filters see page 34/35.

Dimensions

Type	A	B	C	D	E	Weight (kg)
514C/04, 08	160	240	90	148	210	1.6
514C/16, 32	160	240	130	148	210	3.0

STANDARDS

CE marked
EN61800-3 (EMC compliance) with external filter
EN50178 (safety, low voltage directive)

Telephone: **01903 737000** Fax: **01903 737100**

Armature Voltage Feedback Unit 5590

- Suitable for motor voltages 100 - 550V
- IR compensation up to 11%
- DIN rail mounting
- Direct 24V connection to 590A series
- Bi-directional operation
- Trim output potentiometer

5590

This unit provides a means of isolating and attenuating motor armature voltage to levels compatible with drive input signals to give cost effective voltage feedback. It is designed specifically for use with the 590A analogue drives.

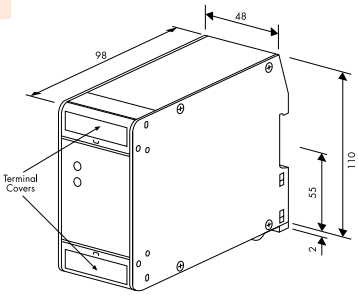

5590

Diagnostic Unit 5570

- 3 digit LCD readout
- Access to 27 test points
- Rapid LED trend display
- Oscilloscope/recorder output
- Direct ribbon cable connection

5570

An easy to use hand held diagnostic unit. The 5570 can be used in conjunction with the 590A, 514C and 5401 field controller. It gives access to 27 key test points on the drives, rapidly decreasing commissioning time and simplifying trouble shooting.

Digital Panel Meter Type 5512

- Digit display to 1999 ±0.05% FS Accuracy
- 3 position decimal point
- ±5V to ±400V dc input
- Ratiometric display of 2 analogue signals
- Last digit flicker inhibit
- 90-130V or 180-260Vac Supply
- CE Marked to EN61010(1994)

5512 Digital Panel Meter (Part No. DA054339)

The extremely versatile 5512 Digital panel meter is ideal for a wide range of signal display applications. Front access multi turn scaling, offset potentiometers and slide in custom legend guarantee minimum set up time.

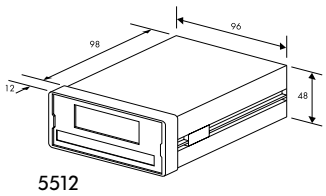

5512

DC DRIVES

590+ Integrator Series

1 to 2700 Amps

The Integrator Series is a single family of both AC drives (690+) and DC drives (590+) that provides the benefits of common programming, set-up and communications across both technologies. The 590+ Integrator series highly advanced DC drive meets the demands of the most complex motor control applications. Extensive application software (including winder control as standard) together with Function Block Programming and configurable I/O creates a total drive system in a single module.

COMMON PROGRAMMING, SET-UP AND COMMUNICATIONS WITH 690+ AC INTEGRATOR SERIES

DRV OPTION WITH BUILT-IN CONTACTOR, FUSES AND BLOWER STARTER

SYSTEMS SPECIFICATION INCLUDING OPEN AND CLOSED LOOP WINDER CONTROL AS STANDARD

RATINGS UP TO 2700A AND SUPPLY VOLTAGES UP TO 660V

FUNCTION BLOCK PROGRAMMING BASED

INTERNAL CONTROLLED FIELD SUPPLY

TECHNICAL SPECIFICATION

Power Configuration

590+ Four Quadrant Regenerative; 2 Fully Controlled Three Phase Thyristor Bridges
591+ Two Quadrant Non-Regenerative; 1 Fully Controlled Three Phase Thyristor Bridge
Thyristor Controlled Variable Field Supply

Armature Current Ratings (Adc)

Frame 1	15, 35A
Frame 2	40, 70, 110, 165A
Frame 3	180, 270A
Frame 4	380, 500, 725, 830A
Frame 5	1580A
Frame H	1200, 1700, 2200, 2700A

DRV Version available Frame 1 and 2

Overload

15- 450A; 200% for 10 seconds 150% for 30 seconds ≥700A;Various overload options available

Armature Voltage

Varmature=Vac x 1.15

AC Supply Voltage (Vac) 50/60Hz

220-500V (±10%) Frame 1-5
110-220V (±10%) option Frame 1-5
500-600V (±10%) option Frame 4-5
500-690V (±10%) Frame H

Field Current

4A Frame 1
10A Frame 2 and 3
30A Frame 4 and 5
60A Frame H

Field Voltage

Vfield=Vac x 0.82

Ambient

Temperature
0-45°C (15-165A ratings)
0-35°C (180-270A ratings)
0-40°C (≥1200A ratings)
Derate 1%/°C for higher ambients to 55°C max

Altitude

500m ASL
Derate 1%/200m above 500m to 5000m max

Protection

High Energy MOV's
Instantaneous Overcurrent
Inverse Time Overcurrent
Field Failure
Speed Feedback Failure
Motor Overtemperature
Heatsink Overtemperature
Thyristor Trigger Failure
Interline Snubber Network
Zero Speed Detection
Standstill Logic
Stall Protection

Inputs/Outputs

Analogue Inputs (5 Total - 1 x 12 bit plus sign, 4 x 10 bit plus sign)
1 - Speed Demand Setpoint (-10/0/+10V)
4 - Configurable

Analogue Outputs (3 Total - 10 bit)
1 - Armature Current Output (-10/0/+10V or 0-10V)
2 - Configurable

Digital Inputs (9 Total - 24V, max 15mA)
1 - Program Stop
1 - Coast Stop
1 - External Trip
1 - Start/Run
5 - Configurable

Digital Outputs (3 Total - 24V(max 30V) 100mA)
3 - Congfigurable

Reference Supplies
1 - +10V dc
1 - -10V dc
1 - +24V dc

Telephone: **01903 737000** Fax: **01903 737100**

DRV – A new concept in DC drive technology

The 590+ is available in either module, or alternatively "DRV" format up to 165A. The DRV version includes all the peripheral power components associated with a DC drive system integrally fitted within the footprint area of the drive. DRV options include the following integrally mounted within the drive:

AC line contactor
AC line fuses
DC fuse (regenerative versions)
Control/field fuses
Motor blower starter
Auxiliary control transformer

All major power components are mounted under the hinged cover within the footprint area of the drive.

Options

Programming/Control Module	6901
Remote mounting bezel and 3m lead	6052
Communication Options	
Profibus Technology Box	6055/PROF
Modbus/EI Bisynch/RS422/RS485 Technology Box	6055/EI00
Link Technology Box	6055/LINK
Devicenet Technology Box	6055/DNET
Tachogenerator switchable calibration board	AH385870U001
Microtach feedback board - glass	AH386025U001
AC Line Reactors (standard type)	
15A rating	C0466448U015
35 and 40A rating	C0466448U040
70A rating	C0466448U070
110A rating	C0466448U110
165A rating	C0466448U165
180A rating	C0055255
270A rating	C0057960
380A rating	C00466709U038
500A rating	C00466709U050
725A rating	C00466709U073
830A	C0466709U083
1580A*	2xC0466709U083
1200A (500V) rating	C0466250U012
1200A (690V) rating	C0466251U012
1700A (500V) rating	C0466250U017
1700A (690V) rating	C0466251U017
2200A (500V) rating	C0466250U022
2200A (690V) rating	C0466251U022
2700A (500V) rating	C0466250U027
2700A (690V) rating	C0466251U027
*1580A	C0466709U160
Load share choke for transformer supply	
AC Line Reactors (for use with EMC filters)	
15A rating	C0466449U015
35 and 40A rating	C0466449U040
70A rating	C0466449U070
110A rating	C0466449U110
165A rating	C0466449U165
180A	C0463039
Above 180A use the standard line reactors above	

EMC filters please refer to page 34/35. Fuses please refer to page 33.

STANDARDS

The 590+ series meets the following standards when installed in accordance with the relevant product manuals.

CE marked to EN50178 (safety, low voltage directive)
EN61800-3 (EMC compliance) with integral filters (590+ up to 110A require external supply capacitors for compliance)
UL listed to US and c UL us listed to Canadian safety standards

Current Rating	Overall Dimensions			Fixing Centres			Weight kg
	A	B	C	D	E1	E2	
Frame 1	200	375	220	140	360	-	6.4
Frame 2	200	434	292	140	418	-	10.5
Frame 3	250	485	234	200	400	-	20
Frame 4	253	700	358	150	680	-	32/44
Frame 5	506	700	358	2x150	680	-	90
Frame H Regenerative	850	1406	417	810	78	4x400	270
Frame H Non-Regenerative	850	956	417	810	78	3x400	160

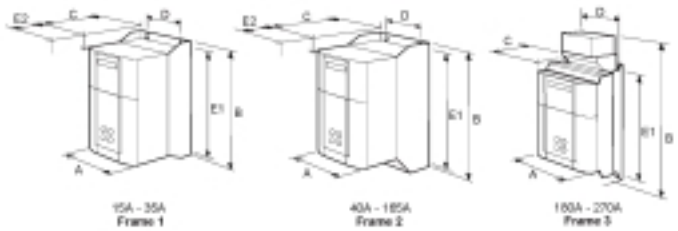

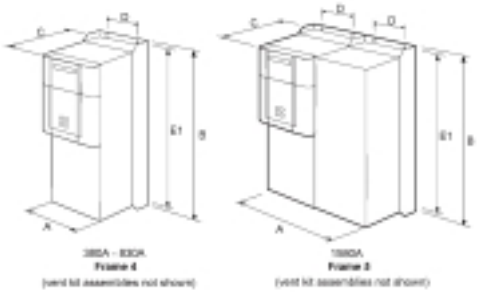

Fastpack DC Enclosed Drives

Up to 9kW Single Phase Supplies

This FASTPACK DC range of enclosed 506, 507, 508, 512C and 514C dc drives are supplied mounted and wired into electrical cabinets ready for immediate installation. As with all the FASTPACK range, stocked base build drives together with a wide choice of pre-engineered system options ensure short delivery times and very economical prices.

TECHNICAL SPECIFICATION

Sheet steel electrical enclosure finished in RAL7032

Drive Module
Ventilation cooling fans and filters where rating requires
Standard options specified

Options

Door interlocked mains isolator
Circuit breaker
Start / stop pushbuttons or switches
Inch pushbuttons
Single or multi-turn potentiometer
Analogue or digital load meter
Analogue or digital speed meter
Emergency stop (Category 1)
Stainless steel or non-standard RAL paint
Oversize enclosure for customers use
Special options

Single Phase Supplies (220-240V or 110-115V, 50-60Hz)

Type	Maximum Armature Current Adc	Dimensions H x W x D (mm)
FP-506-110	3	300 x 250 x 200
FP-506-240	3	300 x 250 x 200
FP-507-110	6	300 x 250 x 200
FP-507-240	6	300 x 250 x 200
FP-508-110	12	300 x 250 x 200
FP-508-240	12	300 x 250 x 200
FP-512C	4	600 x 380 x 210
FP-512C	8	600 x 380 x 210
FP-512C	16	600 x 380 x 210
FP-512C	32	600 x 380 x 350
FP-514C	4	600 x 380 x 210
FP-514C	8	600 x 380 x 210
FP-514C	16	600 x 380 x 210
FP-514C	32	600 x 380 x 350

Prices above include Base Build Specification with Isolator, Single Turn Poteniometer and Start/Stop Switch Options
All dimensions refer to base build enclosure, options may increase the size of the enclosure.
Please refer to your local Eurotherm Drives office for full option details and enclosure size.

READY TO INSTALL COMPLETE SYSTEMS

UP TO 9KW FROM SINGLE PHASE SUPPLIES

COMPREHENSIVE RANGE OF CONTROL OPTIONS

EXTREMELY SHORT DELIVERY TIMES

CE MARKED TO EN60204

Telephone: **01903 737000** Fax: **01903 737100**

Fastpack DC Enclosed Drives

35 to 1800A Three Phase Supplies

This FASTPACK DC range of enclosed 590+ dc drives are supplied mounted and wired into electrical cabinets ready for immediate installation. As with all the FASTPACK range, stocked base build drives together with a wide choice of pre-engineered system options ensure short delivery times and very economical prices.

TECHNICAL SPECIFICATION

Sheet steel electrical enclosure finished in RAL7032

Drive module

Door interlocked circuit breaker

Control transformer with MCB protection

AC supply contactor

AC line reactor

AC drive fuses

Ventilation cooling fans and filters where rating requires

Standard options specified

Options

Start / stop pushbuttons or switches

Inch pushbuttons

Three Phase Supplies (208-500Vac up to 800Adc. 690Vac up to 2700Adc)

Enclosure Type	Rating A dc	Standard Dimensions H x W x D (mm)	With EMC Filter Dimensions H x W x D (mm)
2 QUADRANT (SINGLE ENDED) CONTROLLERS			
FP-591P	15, 35	1200 x 600 x 300	1200 x 600 x 300
	40A, 70A	1200 x 800 x 400	1200 x 800 x 400
	110, 165, 180	1900 x 600 x 500	1900 x 800 x 500
	270,380	2100 x 800 x 600	2100 x 800 x 600
	500, 725, 830	2100 x 1200 x 600	2100 x 1600 x 600
4 QUADRANT (REGENERATIVE) CONTROLLERS			
FP-590P	15, 35	1200 x 600 x 300	1200 x 600 x 300
	40A, 70A	1200 x 800 x 400	1200 x 800 x 400
	110, 165, 180	1900 x 600 x 500	1900 x 800 x 500
	270,380	2100 x 800 x 600	2100 x 800 x 600
	500, 725, 830	2100 x 1200 x 600	2100 x 1600 x 600

* All dimensions are indicative of base build enclosure size, options may increase the size of the enclosure. Please refer to your local Eurotherm Drives office for full option details and confirmation of enclosure sizes. Including 590+ frames 5 (1580A) and H (1200-2700A)

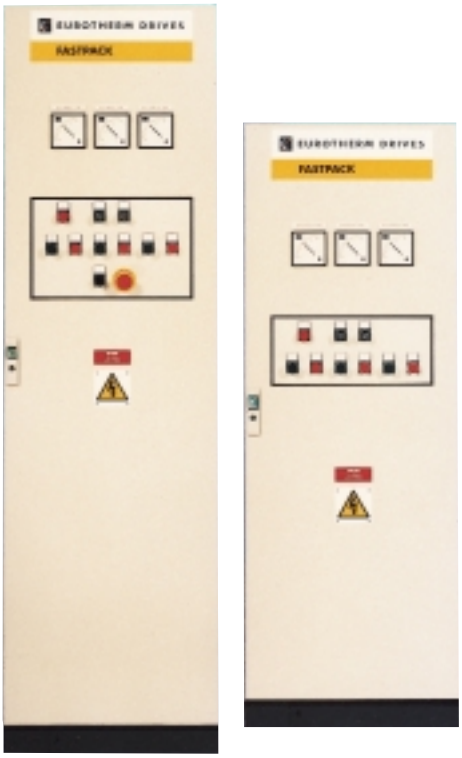

READY TO INSTALL COMPLETE SYSTEMS

THREE PHASE RATINGS UP TO 2700A

COMPREHENSIVE RANGE OF CONTROL OPTIONS

EXTREMELY SHORT DELIVERY TIMES

CE MARKED TO EN60204

LINK

LINK 2 – Fibre Optic Based Drive and Process Control System

LINK 2 is an ultra high speed distributed drive control system. It enables all machine control elements including variable speed drives, operator controls and plant I/O to be networked together to provide integrated machine control of unrivalled flexibility.

Communication speeds of 2.7Mbaud allows LINK 2 to operate a real time event driven deterministic network. Each control element of the machine or process is interconnected on a single noise immune fibre optic, which replaces the myriad of control wires traditionally associated with multi-drive systems. Typically savings of 50% in site cabling time and cost are possible with LINK 2 compared to a standard wired system.

Each LINK 2 system may comprise any combination of Eurotherm Drives sensorless and closed loop AC drives (690+ and 605 series) or DC drives (590+ series). Digital and analogue plant equipment can be interfaced onto the network via local or distributed I/O modules and a variety of gateway devices allow seamless integration with PC based control and monitoring packages.

The major component parts of a LINK 2 control system are described below. There are however many other interface and peripheral components available that help make LINK 2 the world's most flexible control system, so please contact your nearest Eurotherm Drives sales outlet to discuss your application in detail.

TOTAL CONFIGURABILITY FOR THE MOST ADVANCED MULTI-DRIVE SYSTEMS

NOISE IMMUNE FIBRE OPTIC BASED HIGHWAY

REAL TIME PEER TO PEER COMMUNICATIONS

FIELDBUS COMPATIBILITY

MODEM REMOTE ACCESS CAPABILITY

AC AND DC NETWORKED DRIVES

L5300 LinkRack

This high speed intelligent controller forms the heart of a LINK 2 system. There are 4 slots that accommodate any of the plug-in modules below in addition to the main processor and power supply (single phase 85-265Vac). The L5300 has been designed for DIN Rail or direct panel mounting.

L5392 Operator Station

The L5392 is a touch-sensitive LCD colour operator station with provision (in the rear of the unit) for 4 option module slots. The multi page operator screens are software configurable into 6 bands each providing any combination of the following.

- Operator pushbuttons, each independently configurable
- Potentiometers, displaying and setting setpoint and feedback variables
- Indicators, displaying variables only
- Machine status and alarm indicators

L5331 Digital I/O Plug-in Module

16 x 24V channel digital input/output module. Each channel can be independently configured as an input or output. All terminals are plug-in and easily accessed on the front of the module and have LED indication of the "ON" state. A high speed counter for encoder or other pulse inputs is available.

L5341 Analogue I/O Plug-in Module

8 x Input and 2 x Output analogue module. Each channel is bipolar with 14 bit (13 bit + sign) resolution. +10V and -10V power supply outputs are provided for use with external devices including potentiometers and transducers. All terminals are disconnectable plug-in types.

L5351 Devicenet Plug-in Module

Enables LINK 2 to be interfaced into a Devicenet based system.

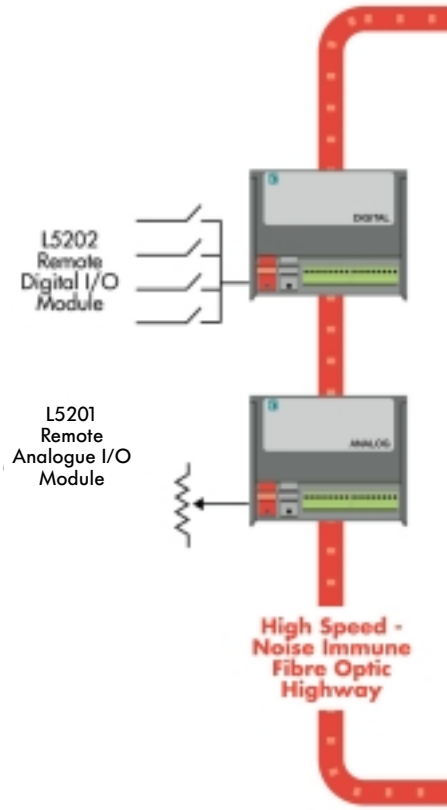

L5353 Profibus Plug-in Module

Enables LINK 2 to be interfaced into a Profibus based system.

L5321 Serial Link/Modbus Plug-in Module

Enables LINK 2 to be interfaced to Modbus or other serial protocol systems.

L5311 RTN Fibre Optic Plug-in Module

Provides input and output connections for the acrylic fibre optic link.

L5201 Remote Analogue I/O Unit

Remote module providing 5 x analogue inputs and 1 x analogue output plus fibre optic interface. Particularly useful for distributed control around the machine or process.

Telephone: **01903 737000** Fax: **01903 737100**

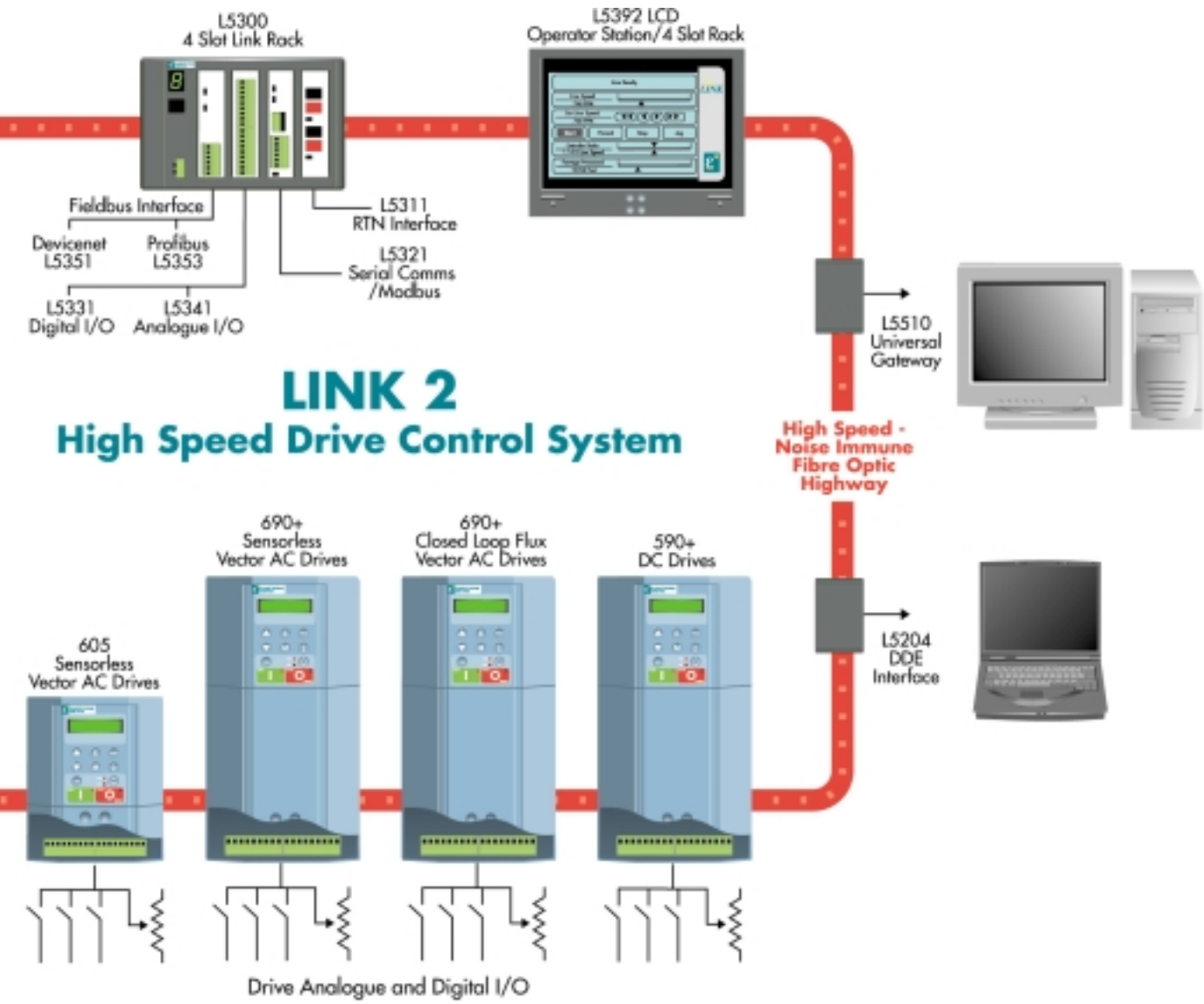

L5202 Remote Digital I/O Unit

Remote module providing 12 x independently configurable 24V digital inputs or outputs plus fibre optic interface. Particularly useful for distributed control around the machine or process.

L5204 DDE Interface

DDE Interface module that opens the LINK 2 network to any Windows based application including SCADA packages.

L5510 Universal Gateway

Universal gateway to additional Bus standards including Data Highway, Ethernet and VME.

DRIVE SYSTEM DESIGNER - Revolutionary System Design Software

Drive System Designer ("DSD") is like no other drive software. It actually designs the drive control system for you! You simply enter basic data on your process (line speed, web tension etc) and identify the function of each drive (unwind, nip roll etc) and DSD does the rest by selecting and configuring all the LINK 2 hardware and software. Full details on this unique software package are on page 38.

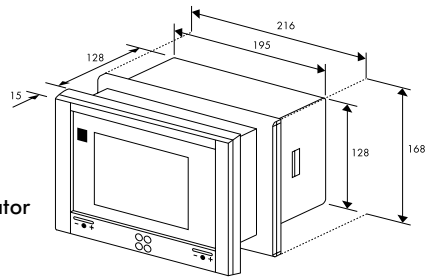

L5392 Operator Station

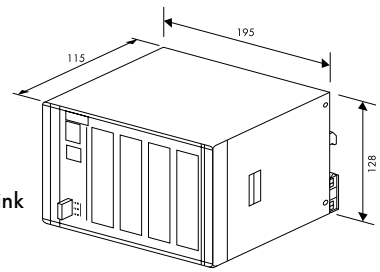

L5300 Link Rack

Three Phase Inverter Rated AC Motors

0.12 to 355kW

A range of aluminium (63-132 frames) and cast iron (160-355 frames) three phase ac induction motors suitable for use with all Eurotherm Drives inverters as well as fixed speed operation. The motors meet the CEMEP EFF 2 efficiency standards.

Dimension data can be found on page 30/31

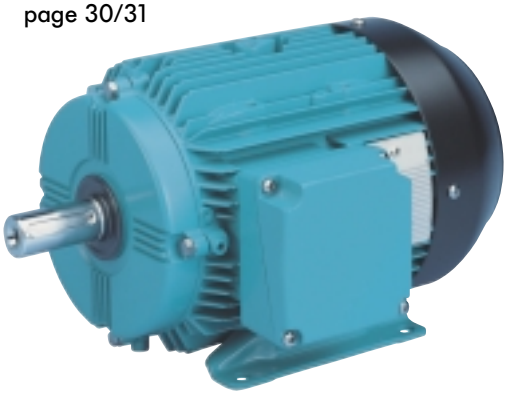

STANDARD

- EFF2 EFFICIENCY
- B3 FOOT OR B5 FLANGE MOUNTING
- IP55 PROTECTION
- INVERTER RATED
- DUAL VOLTAGE 230/400V UP TO 2.2KW
- MULTI-MOUNT TERMINAL BOX (Aluminium Frames)
- THERMISTOR (Standard 160-355 frame, Optional 63-132 frame)

OPTIONS

- EFF1 EFFICIENCY
- B3/B5 FOOT/FLANGE MOUNTING
- B14 'C' FACE AND NON-STANDARD FACE/FLANGE
- FORCE VENTILATION COOLING FAN
- MECHANICAL BRAKE
- HIGHER IP PROTECTION
- ANTI-CONDENSATION HEATERS
- SPECIAL PAINT FINISH
- SPECIAL SHAFTS

Technical Specification

2 Pole Standard Motors

Frame Size	Rating (kW)	Speed @ 50Hz (rpm)	kW Rating 5-1 Speed Range	kW Rating 10-1 Speed range	Full Load Current 230V (A)	Full Load Current 400V (A)
D63	0.12	2790	0.08	0.07	0.76	0.44
D63	0.18	2800	0.13	0.11	1.02	0.59
D63	0.25	2800	0.18	0.15	1.32	0.76
D71	0.37	2800	0.26	0.22	1.59	0.92
D71	0.55	2780	0.39	0.33	2.34	1.35
D80	0.75	2830	0.53	0.45	2.88	1.66
D80	1.1	2820	0.77	0.66	4.09	2.36
D90S	1.5	2860	1.1	0.90	5.51	3.18
D90L	2.2	2860	1.5	1.3	7.95	4.59
D100L	3	2870	2.1	1.8		5.94
D112M	4	2880	2.8	2.4		7.70
D132S	5.5	2900	3.9	3.3		10.5
D132S	7.5	2900	5.3	4.5		14.2
D160M	11	2935	7.7	6.6		19.9
D160M	15	2935	11	9.0		26.8
D160L	18.5	2935	13	11		32.2
D180M	22	2945	15	13		38.3
D200L	30	2950	21	18		52.2
D200L	37	2950	26	22		63.6
D225M	45	2960	32	27		77.7
D250M	55	2965	39	33		95.7
D280S	75	2971	53	45		128
D280M	90	2965	63	54		152
D315S	110	2975	77	66		186
D315M	132	2975	92	79		222
D315L	160	2975	112	96		265
D315L	200	2975	140	120		331
D355M	250	2970	175	150		411
D355L	280	2970	196	168		460
D355L	315	2970	221	189		516

Telephone: **01903 737000** Fax: **01903 737100**

4 Pole Standard Motors

Frame Size	Rating (kW)	Speed @ 50Hz (rpm)	kW Rating 5-1 Speed Range	kW Rating 10-1 Speed Range	Full Load Current 230V (A)	Full Load Current 400V (A)
D63	0.12	1360	0.08	0.07	0.78	0.45
D63	0.18	1370	0.13	0.11	1.11	0.64
D71	0.25	1400	0.18	0.15	1.42	0.82
D71	0.37	1400	0.26	0.22	1.96	1.13
D80	0.55	1420	0.39	0.33	2.70	1.56
D80	0.75	1415	0.53	0.45	3.41	1.97
D90S	1.1	1410	0.77	0.66	4.68	2.70
D90L	1.5	1420	1.1	0.90	6.06	3.50
D100L	2.2	1425	1.5	1.3	8.47	4.89
D100L	3	1425	2.1	1.8		6.51
D112M	4	1435	2.8	2.4		8.45
D132S	5.5	1440	3.9	3.3		11.5
D132M	7.5	1445	5.3	4.5		14.9
D160M	11	1460	7.7	6.6		21.1
D160L	15	1460	11	9.0		27.3
D180M	18.5	1467	13	11		33.2
D180L	22	1465	15	13		39.5
D200L	30	1465	21	18		53.1
D225S	37	1475	26	22		66.3
D225M	45	1475	32	27		79.9
D250SC	55	1475	39	33		96.0
D280S	75	1485	53	45		130
D280M	90	1484	63	54		154
D315S	110	1485	77	66		191
D315M	132	1485	92	79		228
D315L	160	1485	112	96		273
D315L	200	1485	140	120		341
D355M	250	1490	175	150		415
D355L	280	1490	196	168		465
D355L	315	1490	221	189		522
D355L	355	1490	249	213		

6 Pole Standard Motors

Frame Size	Rating (kW)	Speed @ 50Hz (rpm)	kW Rating 5-1 Speed Range	kW Rating 10-1 Speed Range	Full Load Current 230V (A)	Full Load Current 400V (A)
D63	0.12	900	0.08	0.07	1.04	0.6
D71	0.18	900	0.13	0.11	1.18	0.68
D71	0.25	900	0.18	0.15	1.56	0.9
D80	0.37	920	0.26	0.22	2.23	1.29
D80	0.55	920	0.39	0.33	3.05	1.76
D90S	0.75	920	0.53	0.45	3.74	2.16
D90L	1.1	925	0.77	0.66	5.28	3.05
D100L	1.5	925	1.1	0.90	6.72	3.88
D112M	2.2	950	1.5	1.3	9.35	5.40
D132S	3	955	2.1	1.8		6.74
D132M	4	960	2.8	2.4		9.19
D132M	5.5	960	3.9	3.3		12.0
D160M	7.5	970	5.3	4.5		15.9
D160L	11	970	7.7	6.6		22.2
D180L	15	970	11	9.0		29.3
D200L	18.5	975	13	11		35.4
D200L	22	975	15	13		41.7
D225M	30	980	21	18		55.4
D250M	37	980	26	22		67.2
D280S	45	980	32	27		81.7
D280M	55	980	39	33		99.5
D315S	75	935	53	45		135
D315M	90	935	63	54		161
D315L	110	935	77	66		196
D315L	132	935	92	79		232
D355M	160	990	112	96		277
D355M	200	990	140	120		345
D355L	250	990	175	150		427

Three Phase Inverter Rated AC Motors

0.12 to 355kW

A range of aluminium (63-132 frames) and cast iron (160-355 frames) three phase ac induction motors fitted with encoder and force ventilation fan unit. These motors are specifically designed for use with Eurotherm Drives 690+ series closed loop vector drives. They meet the CEMEP EFF 2 efficiency standards.

Dimension data can be found on page 30/31

STANDARD

- INTEGRAL ENCODER WITH PUSH-PULL COMPLEMENTARY OUTPUTS
- INTEGRAL FORCE VENTILATION FAN COOLING
- EFF2 EFFICIENCY
- B3 FOOT OR B5 FLANGE MOUNTING
- IP55 PROTECTION
- INVERTER RATED
- DUAL VOLTAGE 230/400V UP TO 2.2KW
- MULTI-MOUNT TERMINAL BOX (ALUMINIUM FRAMES)
- THERMISTOR (STANDARD 160-355 FRAME, OPTIONAL 63-132 FRAME)

Technical Specification

2 Pole Vector Motors (3000rpm @ 50Hz)

Frame Size	Rating (kW)	Full Load Current 230V (A)	Full Load Current 400V (A)
D63	0.12	0.76	0.44
D63	0.18	1.02	0.59
D63	0.25	1.32	0.76
D71	0.37	1.59	0.92
D71	0.55	2.34	1.35
D80	0.75	2.88	1.66
D80	1.1	4.09	2.36
D90S	1.5	5.51	3.18
D90L	2.2	7.95	4.59
D100L	3		5.94
D112M	4		7.70
D132S	5.5		10.5
D132S	7.5		14.2
D160M	11		19.9
D160M	15		26.8
D160L	18.5		32.2
D180M	22		38.3
D200L	30		52.2
D200L	37		63.6
D225M	45		77.7
D250M	55		95.7
D280S	75		128
D280M	90		152
D315S	110		186
D315M	132		222
D315L	160		265
D315L	200		331
D355M	250		411
D355L	280		460
D355L	315		516

OPTIONS

- EFF1 EFFICIENCY
- B3/B5 FOOT/FLANGE MOUNTING
- B14 'C' FACE AND NON-STANDARD FACE/FLANG
- MECHANICAL BRAKE
- HIGHER IP PROTECTION
- ANTI-CONDENSATION HEATERS
- THERMISTORS
- SPECIAL PAINT FINISH
- SPECIAL SHAFTS

Ordering Information

Please specify motor type, power, speed range, output speed, supply voltage, mounting details and any other options at time of order.

Telephone: 01903 737000 Fax: 01903 737100

4 Pole Vector Motors (1500 rpm @ 50 Hz)

Frame Size	Rating (kW)	Full Load Current 230V (A)	Full Load Current 400V (A)
D63	0.12	0.78	0.45
D63	0.18	1.11	0.64
D71	0.25	1.42	0.82
D71	0.37	1.96	1.13
D80	0.55	2.70	1.56
D80	0.75	3.41	1.97
D90S	1.1	4.68	2.70
D90L	1.5	6.06	3.50
D100L	2.2	8.47	4.89
D100L	3		6.51
D112M	4		8.45
D132S	5.5		11.5
D132M	7.5		14.9
D160M	11		21.1
D160L	15		27.3
D180M	18.5		33.2
D180L	22		39.5
D200L	30		53.1
D225S	37		66.3
D225M	45		79.9
D250SC	55		96.0
D280S	75		130
D280M	90		154
D315S	110		191
D315M	132		228
D315L	160		273
D315L	200		341
D355M	250		415
D355L	280		465
D355L	315		522
D355L	355		

6 Pole Vector Motors (1000 rpm @ 50 Hz)

Frame Size	Rating (kW)	Full Load Current 230V (A)	Full Load Current 400V (A)
D63	0.12	1.04	0.6
D71	0.18	1.18	0.68
D71	0.25	1.56	0.9
D80	0.37	2.23	1.29
D80	0.55	3.05	1.76
D90S	0.75	3.74	2.16
D90L	1.1	5.28	3.05
D100L	1.5	6.72	3.88
D112M	2.2	9.35	5.40
D132S	3		6.74
D132M	4		9.19
D132M	5.5		12.0
D160M	7.5		15.9
D160L	11		22.2
D180L	15		29.3
D200L	18.5		35.4
D200L	22		41.7
D225M	30		55.4
D250M	37		67.2
D280S	45		81.7
D280M	55		99.5
D315S	75		135
D315M	90		161
D315L	110		196
D315L	132		232
D355M	160		277
D355M	200		345
D355L	250		427

Dimension Details

Dimensions

Frame Size	A Centres	B Centres	C	H	K	M PCD Dia	N	P	S Dia	T	D Dia	E	F	G	L Nat Vent	L Nat Vent/ Brake	L Force Vent	L Foce Vent/ Brake	Weight Nat Vent (kg)
63	100	80	40	63	7	115	95	140	10	3.0	11	23	4	8.5	241	291	315	399	4.5
71	112	90	45	71	7	130	110	160	10	3.5	14	30	5	11.0	250.5	289	337.5	400	6.5
80A	125	100	50	80	10	165	130	200	12	3.5	19	40	6	15.5	278.5	327	365	418	9.5
80B	125	100	50	80	10	165	130	200	12	3.5	19	40	6	15.5	287.5	336	365	427	11
90S	140	100	56	90	10	165	130	200	12	3.5	24	50	8	20.0	310	370.5	398	498	13.5
90L	140	125	56	90	10	165	130	200	12	3.5	24	50	8	20.0	325	385.5	423	513	14.5
100L	160	140	63	100	12	215	180	250	15	4.0	28	60	8	24.0	370	434	472	562	25
112M	190	140	70	112	12	215	180	250	15	4.0	28	60	8	24.0	385	474	491	565	38
132SA	216	140	89	132	12	265	230	300	15	4.0	38	70	10	33.0	471.5	569	542	677	57
132SB	216	140	89	132	12	265	230	300	15	4.0	38	70	10	33.0	491.5	589	542	697	68
132MA	216	178	89	132	12	265	230	300	15	4.0	38	70	10	33.0	491.5	589	580.5	697	68
132MB	216	178	89	132	12	265	230	300	15	4.0	38	70	10	33.0	491.5	604	580.5	697	68
160M	254	210	108	160	15	300	250	350	19	5.0	42	110	12	37.0	615	740	740	859	117
160L	254	254	108	160	15	300	250	350	19	5.0	42	110	12	37.0	670	795	795	914	134
180M	279	241	121	180	15	300	250	350	19	5.0	48	110	14	42.5	700	820	820	933	169
180L	279	279	121	180	15	300	250	350	19	5.0	48	110	14	42.5	740	860	860	973	181
200L	318	305	133	200	19	350	300	400	19	5.0	55	110	16	49.0	770	970	970	1083	239
225S	356	286	149	225	19	400	350	450	19	5.0	60	140	18	53.0	815	980	980	1074	287
225M 2P	356	311	149	225	19	400	350	450	19	5.0	55	110	16	49.0	820	980	980	1084	385
225M 4/6/8P	356	311	149	225	19	400	350	450	19	5.0	60	140	18	53.0	845	980	980	1109	385
250M 2P	406	349	168	250	24	500	450	550	19	5.0	60	140	18	53.0	910	1089	1089	1238	385
250M 4/6/8P	406	349	168	250	24	500	450	550	19	5.0	65	140	18	58.0	910	1089	1089	1238	385
280S 2P	457	368	190	280	24	500	450	550	19	5.0	65	140	18	58.0	985	1164	1164	1314	510
280S 4/6/8P	457	368	190	280	24	500	450	550	19	5.0	75	140	20	67.5	985	1164	1164	1314	510
280M 2P	457	419	190	280	24	500	450	550	19	5.0	65	140	18	58.0	1035	1235	1235	1415	600
280M 4/6/8P	457	419	190	280	24	500	450	550	19	5.0	75	140	20	67.5	1035	1235	1235	1415	600
315S 2P	508	406	216	315	28	600	550	660	24	6.0	65	140	18	58.0	1160	1360	1360	1546	930
315S 4/6/8P	508	406	216	315	28	600	550	660	24	6.0	80	170	22	71.0	1270	1470	1470		930
315M 2P	508	457	216	315	28	600	550	660	24	6.0	65	140	18	58.0	1190	1455	1455		1010
315M 4/6/8P	508	457	216	315	28	600	550	660	24	6.0	80	170	22	71.0	1300	1565	1565		1010
315L 2P	508	508	216	315	28	600	550	660	24	6.0	65	140	18	58.0	1190	1455	1455		1175
315L 4/6/8P	508	508	216	315	28	600	550	660	24	6.0	80	170	22	71.0	1300	1565	1565		1175
355M 2P	610	560	254	355	28	740	680	800	24	6.0	75	140	20	67.5	1500	1746	1746		1730
355M 4/6/8P	610	560	254	355	28	740	680	800	24	6.0	95	170	25	86.0	1530	1776	1776		1730
355L 2P	610	630	254	355	28	740	680	800	24	6.0	75	140	20	67.5	1500	1746	1746		1970
355L 4/6/8P	610	630	254	355	28	740	680	800	24	6.0	95	170	25	86.0	1530	1776	1776		1970

All dimensions are given for general guidance. Please refer to Eurotherm Drives for specific installation drawings where required.
Frames 63-132 are aluminium. Frames 160-355 are cast iron

Telephone : **01903 737000** Fax : **01903 737100**

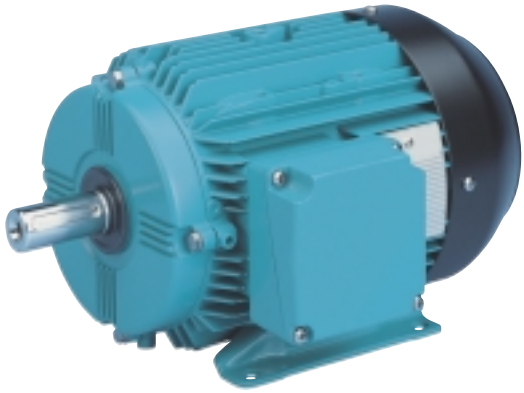

Dimensions

Foot Mounting

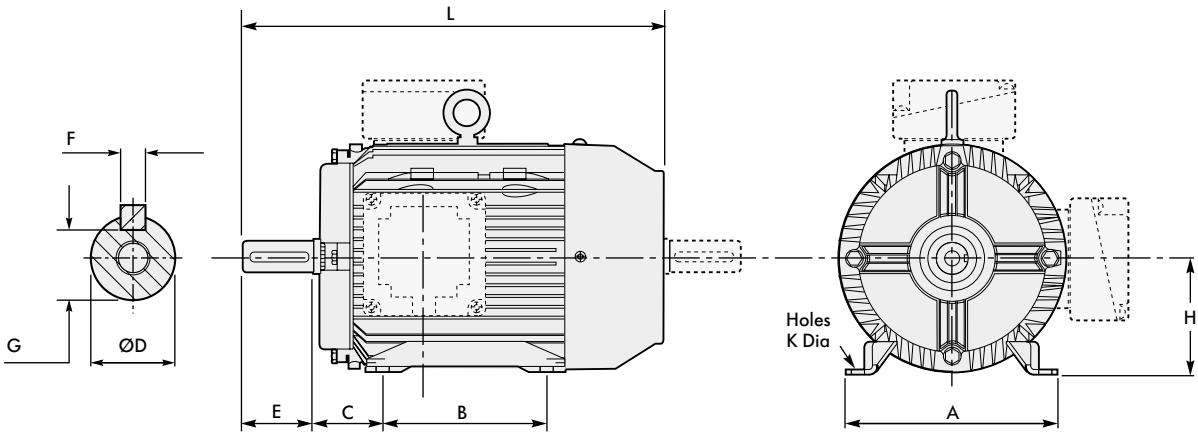

Flange Mounting

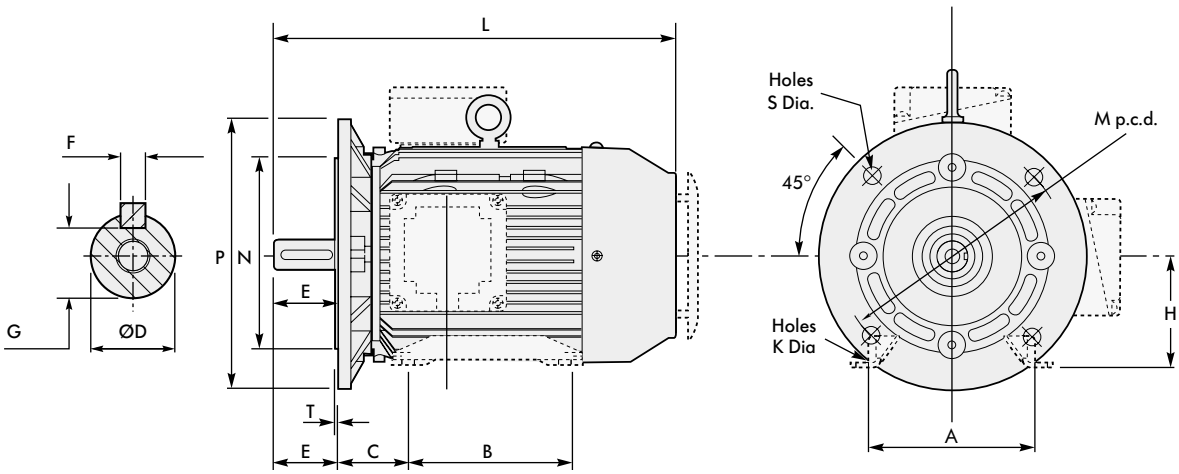

Feedback Devices

Microtach Type 5701

The 5701 microtach complements high performance drives and allows ultra high accuracy speed holding. The fibreoptic technology provides a noise free link in an electrically noisy environment.

STANDARD ENCODER DISK OF 1000 OR 500 LINES, OTHER COUNT RATES TO SPECIAL ORDER

FLANGE FIXING DIMENSIONS COMPATIBLE WITH A CONVENTIONAL TACHOGENERATOR (E.G. REO444R)

REPEATER UNIT AVAILABLE FOR TRANSMISSION DISTANCES ABOVE 40M

A RANGE OF SPLITTERS AND SIGNAL CODING/ DECODING MODULES TO SUIT ALL REQUIREMENTS

Technical Specification	
Power Supply Voltage	12.5 to 40V DC polarity independent
Power Supply Current	60mA at 24V
Weight including connector	0.11kg
Maximum Speed 500ppr	6000rpm
Operating Temperature	0 to 70°C
Protection	IP64
Humidity	Up to 98% non condensing

Microtach 1000ppr European 5701/1	
Microtach 500ppr European 5701/3	
Microtach 5000ppr European 5701/5	

Plastic fibreoptic cable

Fibreoptic 1mm O/D polymer cored cable ideally suited to industrial applications. Available as a single cored cable or composite (sheathed with two power conductors) in fixed reel sizes.

Single core fibreoptic cable	(20m)	CM056316U020	
	(50m)	CM056316U050	
	(100m)	CM056316U100	
Composite fibreoptic cable	(50m)	CM059748U050	
	(200m)	CM059748U200	
Fibreoptic connector (Black)	CI055070		
Fibreoptic connector (Red)		CI055069	

Microtach Type 5901

An infrared glass fibre version of the microtach offering much greater transmission distances.

INTERNATIONAL 'ST' SYSTEM CONNECTOR

FIXING FLANGE COMPATIBLE WITH A CONVENTIONAL TACHOGENERATOR (E.G.REO444R)

STANDARD 1000 PULSES PER REVOLUTION, OTHER COUNT RATES TO SPECIAL ORDER

Technical Specification	
Power Supply Voltage	12.5 to 35V DC polarity independent
Power Requirement	3W
Weight including connector	0.11kg
Maximum Speed 500ppr	6000rpm
Operating Temperature	0 to 70°C
Protection	IP54
Humidity	Up to 98% non condensing

Microtach 5000ppr European 5901/5	

Encoder

Complementing the microtach this encoder offers the option of a traditional wired feedback device housed in a robust aluminium case with antimagnetic stainless steel shaft.

"MILITARY SPEC" PLUG AND SOCKET CONNECTOR ARRANGEMENT

STANDARD 1000 PULSES PER REVOLUTION, OTHER COUNT RATES TO SPECIAL ORDER

INBUILT LINE DRIVER PROVIDES A 15V DIFFERENTIAL SIGNAL SUITABLE FOR LONG DISTANCE TRANSMISSION

FIXING FLANGE COMPATIBLE WITH A CONVENTIONAL TACHOGENERATOR (E.G.REO444R)

TESTED TO EC DIRECTIVE IEC801 PART 3

Technical Specification	
Power Supply Voltage	8 to 15V DC
Power Supply Current	180mA maximum
Weight	0.65Kg
Maximum Speed (500ppr)	6000rpm
Operating Temperature	0 to 70°C
Protection	IP64
Humidity	Up to 98% non condensing
Max. load per output channel	50mA

Eurotherm Drive Encoder DD385536U010	

Telephone: 01903 737000 Fax: 01903 737100

Dynamic Braking

During deceleration, or with an over hauling load, the motor acts as a generator. Energy flows back from the motor into the dc link capacitors within the drive, causing their voltage to rise. If this voltage exceeds a maximum value, the drive will trip to protect the capacitors and internal power devices. The amount of energy that can be absorbed by the capacitors can vary between different applications causing the drive to trip on overvolts. To increase the drive's dynamic braking capability, high power resistor(s), connected across the dc link, allow the dissipation of this excess energy for short term stopping or braking.

Brake resistor selection

Brake resistor assemblies must be rated to absorb both peak braking power during deceleration and the average power over the complete cycle.

Technical Specification

Peak braking power = $\frac{0.0055J \times (n_1^2 - n_2^2)}{t_b}$ (W)

Average braking power $P_{av} = \frac{P_{pk} \times t_b}{t_c}$

J - total inertia (Kgm^2) n_1 - inertia speed (rpm) n_2 - final speed (rpm)
t_b - Braking time (s) t_c - cycle time (s)

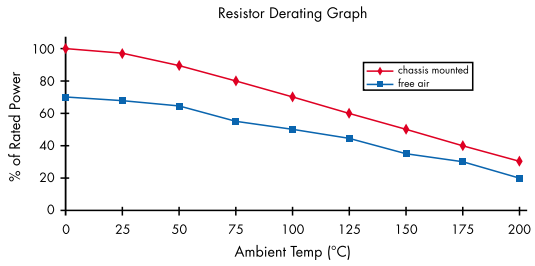

Rating

Part Number	CZ388396	CZ463068	CZ389853
Resistance	36 Ohms	56 Ohms	100 Ohms
Max Wattage	500W	200W	100W
5 Second Rating	500%	500%	500%
3 Second Rating	833%	833%	833%
1 Second Rating	2500%	2500%	2500%

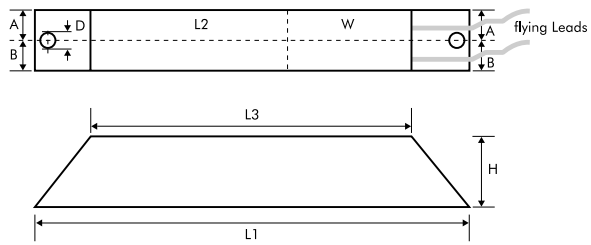

Mechanical outline of default brake resistors

Dimensions

Dimensions (mm)	CZ388396	CZ463068	CZ389853
L1	335	165	165
L2	316	146	152
L3	296	125	125
W	30	30	22
H	60	60	41
D	5.3	5.3	4.3
a	13	13	10
b	17	17	12
Flying Lead Length (mm)	500	500	500

Brake Resistors and Fuses

590+ DRV AC Supply Fuses and DC Armature Fuses

(included within drive module)

590+ DRV Drive Rating (A)	AC Supply Fuse Rating (A)	AC Fuse Part Number (3 per Drive Required)	DC Fuse Rating (A)	DC Fuse Part Number (1 per Drive, Regen' Only, Required)
15	40	CS470407U040	50	CS470445U050
35	40	CS470407U040	50	CS470445U050
40	50	CS470408U050	60	CS470469U060
55	80	CS470408U080	90	CS470469U090
70	80	CS470408U080	90	CS470469U090
90	125	CS470408U125	150	CS470469U150
110	125	CS470408U125	150	CS470469U150
125	200	CS470408U200	200	CS470469U200
165	200	CS470408U200	200	CS470469U200

590+ AC Supply Fuses

590+ Drive Rating (A)	AC Supply Fuse Rating (A)	AC Fuse Part Number (3 per Drive Required)	Fuse Size
15	40	CH570044	00
35	40	CH570044	00
40	40	CH570044	00
70	80	CH570084	00
110	160	CH580164	01
165	200	CH580025	01
180	200	CH580025	01
270	500	CH590554	03
360	700	CH590075	03
450	700	CH590075	03
720	800	CH590085	03

590+ DRV and 590+ Field Supply Fuse

590+ DRV/ 590+ Drive Rating (Adc)	Field Rating (Adc)	Fuse Rating (Aac)	Fuse Part Number	Fuse Size (mm)
15-35	4	10	CS470407U010	10 x 38
40-165	10	10	CS470407U010	10 x 38
180-270	10	10	CH430014	10 x 38
360-720	20	20	CH430024	10 x 38

506,7,8; 512C, 514C AC Supply Fuses

Drive Product	Fuse Rating (Aac)	Fuse Part Number	Fuse Size (mm)
512C/514C 4A	12	CH390123	14 x 51
512C/514C 8A	16	CH390163	14 x 51
512C/514C 16A	32	CH390323	14 x 51
512C/514C 32A	50	CH390054	14 x 51
506 3A	10	CH230014	6.3 x 32
507 6A	10	CH230014	6.3 x 32
508 12A	20	CH230024	6.3 x 32

Fuse Holders

Fuse Size	Mounting Style	Fuse Holder Part Number	Number of Fuses per Holder
6.3 x 32	DIN Rail	CP049956	1
10 x 38	DIN Rail	CP051602	1
14 x 51	DIN Rail	CP054175	1
00	Back Panel	CP059914	3
00	Bus Bar, Top Entry	DB058253	3
00	Bus Bar, Bottom Entry	DB058254	3
01	Back Panel	DB389712	3
01	Bus Bar, Top Entry	DB058256	3
01	Bus Bar, Bottom Entry	DB058255	3
03	Back Panel	CP059912	3
03	Bus Bar Conversion Kit for CP059912	CP059913	–

EMC Filters and Chokes

A range of custom designed optional EMC (ElectroMagnetic Compatibility) filters and line chokes are available for use with the Eurotherm Drives product range. These have been designed to provide cost effective and easily implemented solutions for a variety of standard installations as well as less common requirements such as unusually long cable runs, 500V ac applications and non-earth referenced supplies.
All Eurotherm Drives product have been designed to facilitate compliance with EMC Standard BS EN 61800-3:1997 (Incorporating Amendment No.1) - "Adjustable speed electrical power drive systems - Part 3". When installed in accordance with the relevant manual most products comply without the need for any external emc filters. The table below summarises compliance to the standard for each product.

Environment 1 relates to drives connected to electrical supplies shared with domestic dwellings
Environment 2 relates to drives connected to electrical supplies not shared with domestic dwellings
TN Supply = Earth Referenced AC Supply up to 460V ac
IT Supply = Non-Earth Referenced AC Supply up to 500V ac
Ext Filter = Filter fitted externally to the drive
Ext FP Filter = Filter fitted externally behind the drive with identical Foot Print and mounting centres to drive

EMC Filters		
Product	**Environment 2 (Industrial)**	**Environment 1 (Domestic)**
AC Drives		
650 / 650V		
Frame 1-3	Specify "F" in product code	Specify "F" in product code
650V / 690+		
Frame B	Specify "F" in product code	Specify "F" in product code
Frame C	Standard	TN Supply Ext FP Filter C0467841U044 IT Supply Ext FP Filter C0467842U044
Frame D	Standard	TN Supply Ext FP Filter C0467841U084 IT Supply Ext FP Filter C0467842U084
Frame E	Standard	TN Supply Ext FP Filter C0467841U105 IT Supply Ext FP Filter C0467842U105
Frame F	Standard	TN Supply Ext FP Filter C0467841U215 IT Supply Ext FP Filter C0467842U215
Frame G/H/J		
(690PG-1100 and 690PG-1320)	Standard	Ext Filter C0467843U340
(690PG-1600 and 690PG-1800) and Frame H and J	Standard	Ext Filters 2 x C0467843U340
605		
Frame A and B	Specify "F" in product code	Specify "F" in product code
Frame C	Standard	TN Supply Ext FP Filter C0467841U044 IT Supply Ext FP Filter C0467842U044
Servo Drives		
631	Specify "F" in product code	Specify "F" in product code
635 / 637+	Ext Filter	Ext Filter
DC Drives		
506.507,508	Ext FP Filter C0389115	Ext FP Filter C0389115
512C, 514C		
4,8,16A	Ext FP Filter C0389113	Ext FP Filter C0389113
32A	Ext FP Filter C0389114	Ext FP Filter C0389114

Telephone : **01903 737000** Fax : **01903 737100**

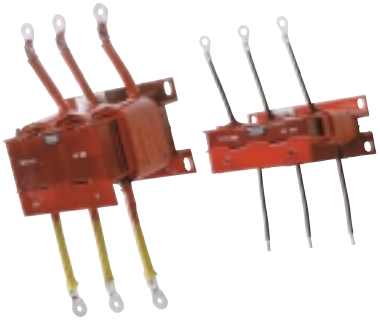

EMC Filters				
Product	**Environment 2 (Industrial)**		**Environment 1 (Domestic)**	
590+				
Frame 1 - 15A	Standard with input capacitors fitted		Ext Filter C0467844U015	
Frame 1 - 35, 40A	Standard with input capacitors fitted		Ext Filter C0467844U040	
Frame 2 - 70A	Standard with input capacitors fitted		Ext Filter C0467844U070	
Frame 2 - 110A	Standard with input capacitors fitted		Ext Filter C0467844U110	
Frame 2 - 165A	Standard		Ext Filter C0467844U165	
Frame 3 - 180A	Standard		Ext Filter C0467844U180	
Frame 3 - 270A	Standard		Ext Filter C0467843U340	
Frame 4, 5, H	Standard		Not Applicable - Refer to Eurotherm Drives	

A range of filter terminal covers is available for direct wall mounted filters.

Filter Type	Filter Terminal Cover	
C0467841U020 C0467842U020	BA467840U020	
C0467841U044 C0467842U044	BA467840U044	
C0467841U084 C0467842U084	BA467840U084	
C0467841U105 C0467842U105	BA467840U105	

Input and Output Chokes for AC Drives

This range of optional AC Input and Output chokes provide additional inductance on the supply side (input) or motor side (output) of the drive.
An input choke may be used to reduce the harmonic content of the supply and provide greater protection against mains borne transients.
An output choke can maintain the radiated EMC emissions levels over motor cable lengths greater than those specified. The extra inductance provided by the output choke can also provide protection against nuisance drive tripping with unusually long cable runs.

AC Drive Chokes

Output Choke AC Drive Rating (kW)	Input Choke AC Drive Rating (kW)	Choke Inductance	RMS Current Rating (A)	Choke Part Number
0.75-1.5kW	0.75-2.2kW	2mH	7.5A	C0055931
2.2-5.5kW	4-7.5kW	0.9mH	22	C0057283
7.5-11kW	11-15kW	0.45mH	33	C0057284
15kW	18kW	0.3mH	46	C0057285
18-22kW	22-30kW	50uH	70	C0055193
30kW	37kW	50uH	99	C0055253
37-45kW	45-55kW	50uH	145	C0055255
55kW	75kW	50uH	202	C0057960

Reference Information and Explanation of Abbreviations

Degrees of Protection

As defined by IEC34-5 and BS4999 pt 105, the code generally consists of 'IP' followed by two digits, the first describing the protection against solid bodies or protection to persons against contact with live or moving parts inside the enclosure, the second describing the protection against ingress of water.

First Digit	Meaning (Protection Against)	Second Digit	Meaning (Protection Against)
0	Not protected	0	Not protected
1	50mm dia. body	1	Vertical drips
2	12mm dia. body	2	Drips up to 15° from vertical
3	2.5mm dia. body	3	Drips up to 60° from vertical
4	1mm dia. body	4	Splashing from any direction
5	Dust Protected	5	Water jets from any direction
6	Dust tight	6	Heavy Seas (Does not cover corrosion resistance, etc)
		7	Effects of immersion

Cooling Forms

As defined by IEC34-6 and BS4999 pt.106, the code generally consists of 'IC' followed by two digits, the first describing the cooling circuit arrangement, the second describing the method of supplying power to circulate the coolant. Where more than one cooling circuit is in use, these may be expressed as 'IC' followed by groups of two digits, eg IC0141.

The following forms are used in this catalogue:

IC01 - Open machine self-ventilated by fan mounted internally on the shaft.
IC06 - Open machine ventilated by a blower mounted on the machine.
IC0041 - Totally enclosed, no external fan.
IC0141 - Totally enclosed, fan ventilated. Surface cooling by external fan mounted on the shaft.
IC0641 - Totally enclosed, surface cooled by blower mounted on
the machine.
IC411 - Totally enclosed fan ventilated. Motor cooled by an external fan.
IC416 - Totally enclosed force cooled. Motor cooled by an independent fan.

Mounting Forms

The arrangements are defined by IEC34-7, BS4999 pt. 107 code II (and DIN42950). The following forms are used in this catalogue, and are for motors with two bearings housed in endshields. When flange mounting they have access to the back of the flange.

IM1001 (B3) Horizontal foot mounted
IM1011 (V5) Vertical foot mounted
IM3001 (B5) Horizontal flange mounted
IM3011 (V1) Vertical flange mounted
IM2001 (B35) Horizontal foot & flange mounted
IM1071 (B8) Horizontal foot, ceiling mounted

Note for Gearbox Users - Service Factor

The geared motors covered by this catalogue are rated for driven machines with a uniform load for continuous duty or occasional moderate shock loading on single-shift operation, being known as a Unity Service Factor. For applications with short-time duty, high inertia or heavy shock loads, advice should be sought on calculating the correct service factor and selecting the most suitable gearbox type.

Abbreviations

Electrical Data

Kilowatts	= kW
Volts	= V
Armature Volts	= Va
Field Volts	= Vf
Amperes	= A
Armature Current	= Ia
Field Current	= If
Power Factor	= PF

Useful Conversion Factors

1HP	= 746W
1Nm	= 8.851lb.in
1mm	= 0.3937inch
1m^2	= 35.31ft^2
1kg.m^2	= 1Nms^2 = 0.73752 lb.ft^2

Useful formulae

1 Watt = 1Nm/s

Torque (lb ft) $= \frac{5250 \times HP}{\text{speed (rpm)}}$

Torque (Nm) $= \frac{9549 \times kW}{\text{speed (rpm)}}$

3 phase ac power (kW) $= \frac{1.732 \times V \times I \times PF}{1000}$

1 phase ac power (kW) $= \frac{V \times I \times PF}{1000}$

Telephone : **01903 737000** Fax : **01903 737100**

Useful Servo Drive Calculations

Correctly rating a servo motor and drive application often involves mechanical calculations. Below are typical examples of some of the commonly occurring formula that are often encountered. These are provided for general guidance only and any results may need to be modified to take into account specific application details such as mechanical losses, inclined angles and duty cycles etc. Your local Eurotherm Drives sales office will always be pleased to assist in correctly sizing your application.

Time to accelerate a rotating mass

M(acc) = Acceleration Torque, Nm
J(tot) = Total Inertia, kgm^2
J(mot) = Motor Inertia, kgm^2
J(load) = Load Inertia, kgm^2
Z = Gearbox Ratio (Speed Reducing)
t(acc) = Acceleration time, sec
α = Angular Acceleration, $rad.sec^{-2}$
ϖ = Angular Speed, $rad.sec^{-1}$
n = Angular Speed, rpm

M(acc) = J(tot) x α or α = M(acc)/ J(tot)

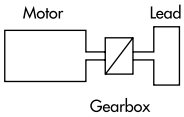

α = ϖ/t(acc) or t(acc) = ϖ/α

ϖ = (n/60) x 2π

J(tot) = J(mot) + (J(load)/Z^2)

Example

J(load) = 0.50kgm^2
J(mot) = 5.0$kgcm^2$ (=0.00050kgm^2)
Z = 30:1
n = 1500rpm
M(acc) = 15Nm

J(tot) = 0.00050 + (0.5 / 30^2)
J(tot) = 0.00106 kgm^2

α = M(acc)/J(tot)

α = 15/0.00106
α = 14,150 $rad.sec^{-2}$

ϖ = (1500/60) x 2π
ϖ = 157 $rad.sec^{-1}$

t(acc) = ϖ/α
t(acc) = 157/14,150
t(acc) = 0.0111 sec (11.1 mS)

Useful Inertia Formula

Servo drives are often employed in highly dynamic applications where rapid and accurate positioning is required. To obtain the ultimate performance in any system, the reflected load inertia (taking into account any gearbox or pulley ratios) should equal the motor inertia. This is often not possible, but ratio mismatches of typically 5:1 are not normally significant. The greater the mismatch between reflected load inertia and motor inertia, the lower will be the dynamic performance of the system.

Solid Cylinder Rotating About Axis XX

J = (mR^2)/2

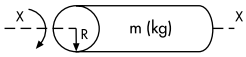

Hollow Cylinder Rotating About Axis XX

J = m(R^2 + r^2)/2

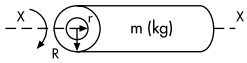

Equivalent Inertia of Slide Mass on a Ballscrew

J = m(s/2π)^2

Effect of Gear Ratio on Reflected Inertia

J = J(load) / Z^2

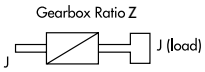

Torque Required to Produce a Force on a Leadscrew

M = Required Torque, Nm
F = Linear Force, N
Z = Gearbox Ratio (Speed Reducing)
(Z =1 for direct drive)
s = Ballscrew Pitch, m
η = Efficiency

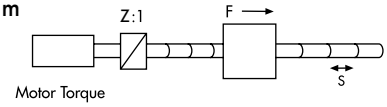

M = Fs/$2\pi R\eta$

Example

F = 10,000N
s = 10mm (0.01 m)
Z = 2:1
η = 0.9

Required motor torque M = (10,000 x 0.01) / (2π x 2 x 0.9)
= 8.85Nm

(nb; The required force is often provided in kg's or kgf. This implies the force exerted on the mass by gravity (g) and must be multiplied by 9.81 to obtain the force in N (newtons); eg A "force" of 100kg is 981N)

ConfigEd Lite+

ConfigEd Lite+ 'Windows' based drive programming software greatly simplifies Configuration, Parameterisation, Monitoring and Diagnostics of both AC and DC drives from a single package.
On start-up, a tutorial style drive set-up menu leads the user a step at a time through a structured commissioning procedure. This ensures that the drive performance is maximised in the shortest time possible without having to navigate through non-applicable parameters or menus.
Once running any parameter can be monitored as a digital value or assigned to one of the 4 auto-scaling chart recorder channels. To simplify monitoring the user can also assign any parameter to a personal customised list or view only those parameters whose values differ from the factory default settings.
Both AC and DC drives comprise over one hundred control software function blocks that can be fully interconnected graphically using ConfigEd Lite+. Available function blocks include Maths Functions, Logic Functions, Timers, Comparators and Counters as well as process functions such as Winders and PID control. The drives are dispatched with the function blocks pre-configured as a standard drive so you can operate it straight from the box. Alternatively pick one of the ready-programmed Applications or enjoy the full drive flexibility by interconnecting the blocks to create your own control strategy.

ConfigEd Lite+

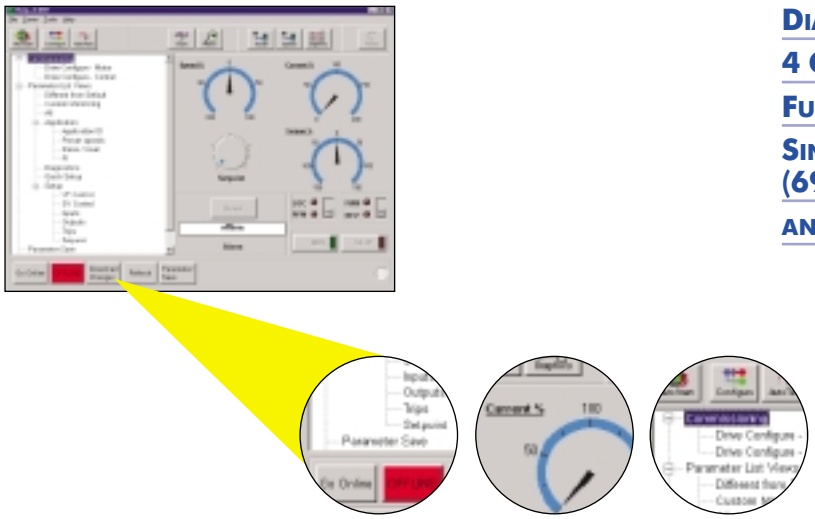

- Tutorial Style Quick Set-Up
- Parameterisation
- Diagnostics
- 4 Channel Chart Recorder
- Full Function Block Programming
- Single Software Package for AC (690+ , 650V) and DC (590+) Drives

DSD - Drive System Designer

In its standard form DSD – Drive System Designer – is an intuitive, easy to use configuration, set-up and monitor software package that can be used with any of the powerful LINK AC and DC drives. DSD makes light work of even the most sophisticated multi-drive systems by enabling the multitude of LINK software function blocks to be configured using standard click and drag operations. DSD is completely graphical and self-documenting.

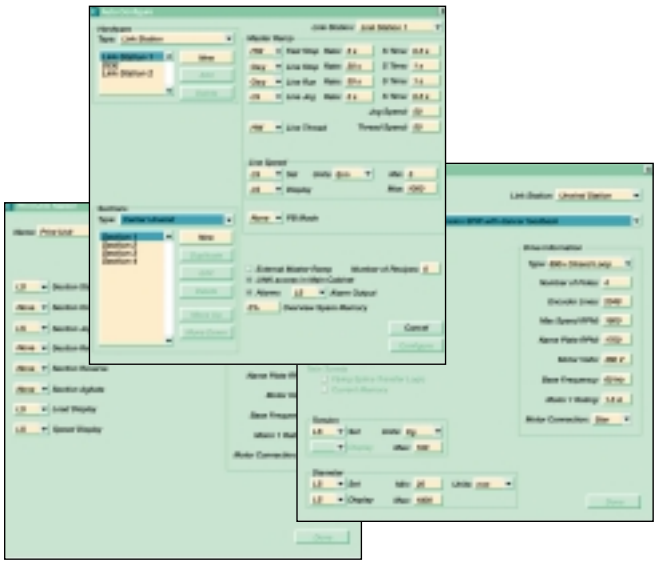

But DSD can go far beyond a configuration tool – the optional "Autoconfigure" function turns DSD into the worlds most advanced drive design software. It allows the user to design complete multi drive systems in minutes, designs that previously would have taken days of expert engineering and debugging time. From a standard single line diagram of the machine or process the user simply enters basic parameters (line speed, web tension etc) and functions (winder, nip drive etc) – the software does the rest. Literally hundreds of man-years of drive system expertise are built into DSD – and ready for you to take immediate advantage of.

- Design Complex Drive Systems in Minutes – Not Days
- Compatible With All LINK AC and DC Drives
- Intuitive and Graphical Throughout
- Simple Click and Drag Techniques
- Self Documenting
- Ideal for both Simple and Highly Complex Drive Systems

Telephone : **01903 737000** Fax : **01903 737100**

EUROTHERM DRIVES WORLDWIDE
Overseas Companies

UK (Head Office)
Eurotherm Drives Ltd
New Courtwick Lane,
Littlehampton,
West Sussex,
BN17 7RZ,
United Kingdom.
Tel: +44 (1903) 737000
Fax: +44 (1903) 737100
Web: www.eurotherm.co.uk

CANADA
Eurotherm Drives
530 Seaman Street,
Unit 3,
Stoney Creek,
Ontario, L8E 3X7,
Canada.
Tel: +1 (905) 664 8911
Fax: +1 (905) 664 5869

FRANCE
Eurotherm Vitesse Variable SA
15 Avenue de Norvège,
Villebon/Yvette,
91953 Courtaboeuf Cedex
Paris, France.
Tel: +33 1 (69) 185151
Fax: +33 1 (69) 185159

GERMANY
Eurotherm Antriebstechnik GmbH
Van-Humboldt-Strasse 10,
64646 Heppenheim,
Germany.
Tel: +49 (6252) 798200
Fax: +49 (6252) 798205

ITALY
Eurotherm Drives SpA
Via Gran Sasso 9,
20030 Lentate Sul Seveso,
Milano,
Italy.
Tel: +39 (0362) 557308
Fax: +39 (0362) 557312

SWEDEN
(including Denmark, Finland and Norway)
Eurotherm Drivteknik AB
Box 9084,
S-30013 Halmstad,
Sweden.
Fax: +46 (35) 177300
Fax: +46 (35) 108407

USA
Eurotherm Drives Inc.
9225 Forsyth Park Drive,
Charlotte,
North Carolina 28273,
USA.
Tel: +1 (704) 588 3246
Fax: +1 (704) 588 3249

DRIVE PARTNERS

ARGENTINA

AUSTRALIA

AUSTRIA

BANGLADESH

BELGIUM

BRAZIL

CHILE

CHINA

COLOMBIA

COSTA RICA

CYPRUS

CZECH REPUBLIC

DENMARK

FINLAND

EGYPT

GREECE

HONG KONG

HUNGARY

ICELAND

INDIA

INDONESIA

IRAN

IRELAND

ISRAEL

JAPAN

KENYA

KOREA

LITHUANIA

MALAYSIA

MOROCCO

NETHERLANDS

NEW ZEALAND

NORWAY

PHILIPPINES

POLAND

PORTUGAL

ROMANIA

SAUDI ARABIA

SINGAPORE

SOUTH AFRICA

SPAIN

SRI LANKA

SWITZERLAND

TAIWAN

THAILAND

TURKEY

UNITED ARAB EMIRATES

UKRAINE

Datafile

Please request any of the following brochures containing full technical details.

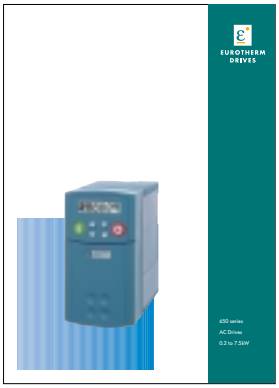

650 Series
AC Drives 0.2 to 90kW.

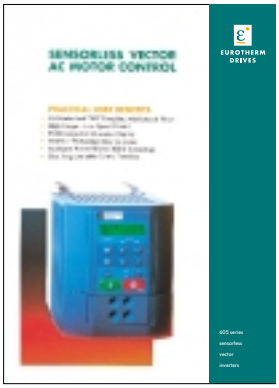

605
Sensorless Vector AC Inverters 0.75 to 15kW.

630 Series
High performance Servo Drives 0.1-63Nm.

690+
Integrator AC Drives 0.37 to 355kW.

590+
Integrator DC Drives 1 to 2700A.

FASTPACK
Enclosed AC and DC Drives.

512C
Single Phase Non-Regenerative DC Drives 4 to 32A.

514C
Single Phase Regenerative DC Drives 4 to 32A.

506/507/508
Single Phase DC Drives 3 to 12A.

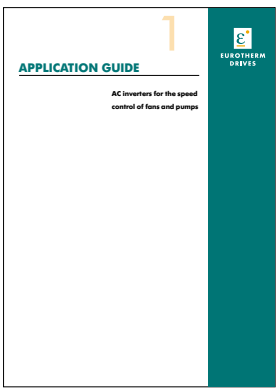

Application Guide 1
AC Inverters for the speed control of 17fans and pumps.

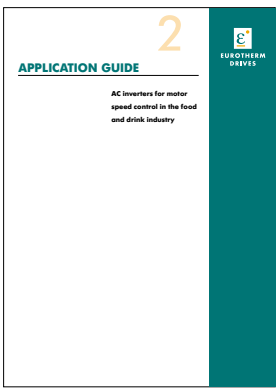

Application Guide 2
AC Inverters for motor speed control in the food and drink industry.

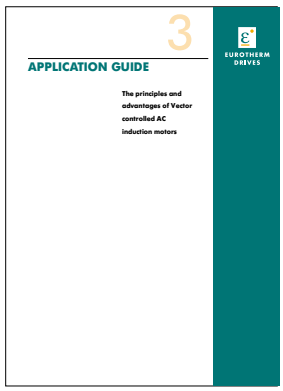

Application Guide 3
The principles and advantages of Vector controlled AC Induction motors.

Telephone : **01903 737000** Fax : **01903 737100**

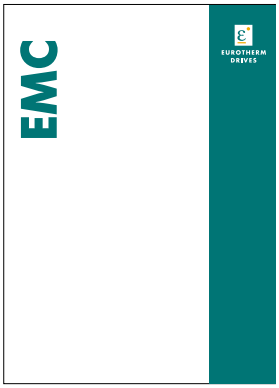

Application Manual

EMC Installation Guide

Customer Training

Drive Product and Application Training.

General Commercial Information

Prices shown for controllers and ancillaries are inclusive of standard inland packing and carriage via courier service, but exclude VAT. Please consult our sales office for charges on motors or premiums for other delivery methods. Note that we have a £30.00 minimum order charge.

Please confirm price and delivery against your specific requirements when placing your order. All information presented in this catalogue is given without commitment as a general indication of our product range.

Every effort has been taken to ensure the accuracy of this catalogue. However, we are continuously improving our products which could, without notice, result in amendments to specifications and prices, or omissions to this catalogue. We cannot accept responsibility for consequential damage, injury, loss or expenses resulting therefrom.

If you send us a written order containing your standard purchasing conditions, we will assume you are prepared to accept our terms of trading unless you send a covering letter stating to the contrary. If you wish to confirm in writing an order placed verbally or by fax, please assist us in avoiding duplication by clearly marking it 'confirmation only'.

Cancellation of orders or return of goods may only be made with the consent of Eurotherm Drives. Any credit agreed may be subject to a handling, retest and repackaging charge. Custom made goods may be excluded from return.

These general terms of business are for guidance only and are applicable within the UK. All goods, services and software offered are subject to our Terms and Conditions of Sale, copies of which are available upon request (Ref: IA058393C).

Compliance Information

The products offered in this catalogue are classed as professional equipment for restricted sales applications to end users of permanently connected industrial motor control applications. As such, these products have been assessed in accordance with industrial electrical/mechanical safety and EMC standards, and must be installed and maintained by qualified personnel in accordance with local regulations. A qualified person is someone who is technically competent and familiar with all electrical/mechanical safety and EMC information and established practices. Refer to individual product manuals for information concerning compliance and other legal responsibilities.

EUROTHERM
DRIVES

EUROTHERM DRIVES LIMITED HEAD OFFICE/EXPORT SALES

New Courtwick Lane, Littlehampton, West Sussex. BN17 7RZ

Tel: +44 (0)1903 737000 Fax: +44 (0)1903 737125

Telephone: +44 (0)1903 737000 Fax: +44 (0)1903 737100 www.eurothermdrives.com E-mail: info@drives.eurotherm.co.uk

Printed in England HA467597 Issue 2 © 2003 Eurotherm Drives Limited