PRODUCT NUMBER	DIM. X	DIM. S
91113–02CA	2.2 mm	13.0
91113–04CA	4.3 mm	13.0
91113–02DA	2.2 mm	15.6
91113–04DA	4.3 mm	15.6
91113–02FA	2.2 mm	21.0
91113–04FA	4.3 mm	21.0

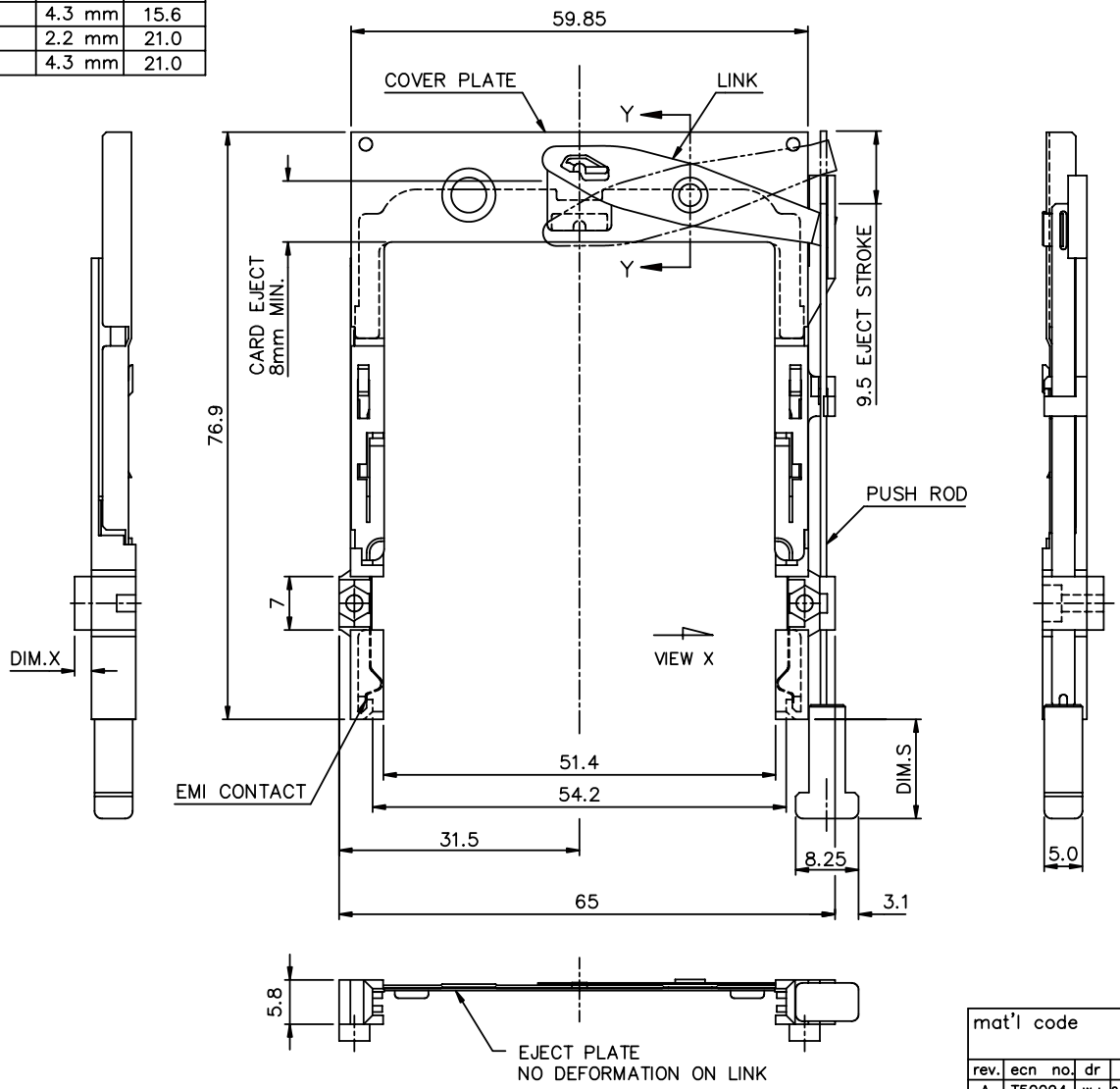

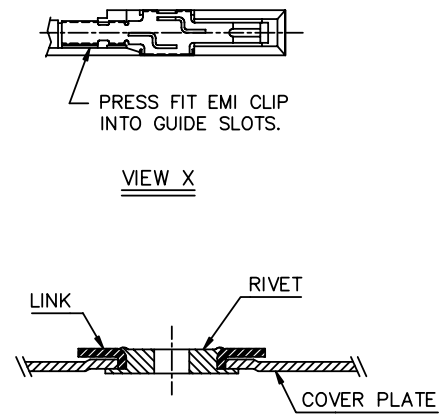

NOTE:

1. EJECT PLATE TO MOVE ALONG INSIDE WALL OF COVER PLATE SMOOTHLY AFTER ASSEMBLING WITH HEADER.
2. MATERIAL :
   PLASTIC GUIDES : POLYPHTHARAMIDE UL94V–0 BLACK
   COVER PLATE : STAINLESS STEEL
   EMI CONTACT : PHOSPHOR BRONZE
3. FINISH :
   EMI CONTACT
   CONTACT AREA 0.5 mm Au.
   UNDERPLATING 1.0 mm Ni.

mat'l code				tolerance unless otherwise specified		CUSTOMER COPY	FCI www.fciconnect.com
rev.	ecn no.	dr	date	linear	±0.30	projection	title NARROW BODY FRONT EJECT TYPE 1/2/3 MECHANISM ASS'Y
A	T50094	W L	04/06/95				
B	T20234	W L	07/25/02				
C	N06–0034	M Z	02/13/06	angles	± 2°		
				dr	WENDY CHEN 02/13/95	unit mm/inch	product family PCMCIA / code
				engr	JOSEPH HSIA 02/13/95		size A3 / dwg no. 91113
				chr	JOSEPH HSIA 02/13/95	scale 1.5:1	sheet 1 OF 2
				appd	D K WANG 02/13/95		
sheet	revision	C	C				
index	sheet	1	2				

Tous droits strictement reserves. Reproduction ou communication a des tiers int sous quelque forme que ce soit sans autorisation ecrite du propietaire. propriete de c BERG ELECTRONICS. Droits de reproduction BERG ELECTRONICS bv

All rights strictly reserved. Reproduction or issue to third parties in any for whatever is not permitted without written authority from the proprietor. Property of c BERG ELECTRONICS. Copyright BERG ELECTRONICS bv

PDM: Rev:C STATUS: Released Printed: Oct 12, 2010

PRODUCT NUMBER	DIM. X	DIM. S
91113–12CA	2.2 mm	13.0
91113–12CALF	2.2 mm	13.0
91113–14CA	4.3 mm	13.0
91113–12DA	2.2 mm	15.6
91113–14DA	4.3 mm	15.6
91113–12FA	2.2 mm	21.0
91113–14FA	4.3 mm	21.0

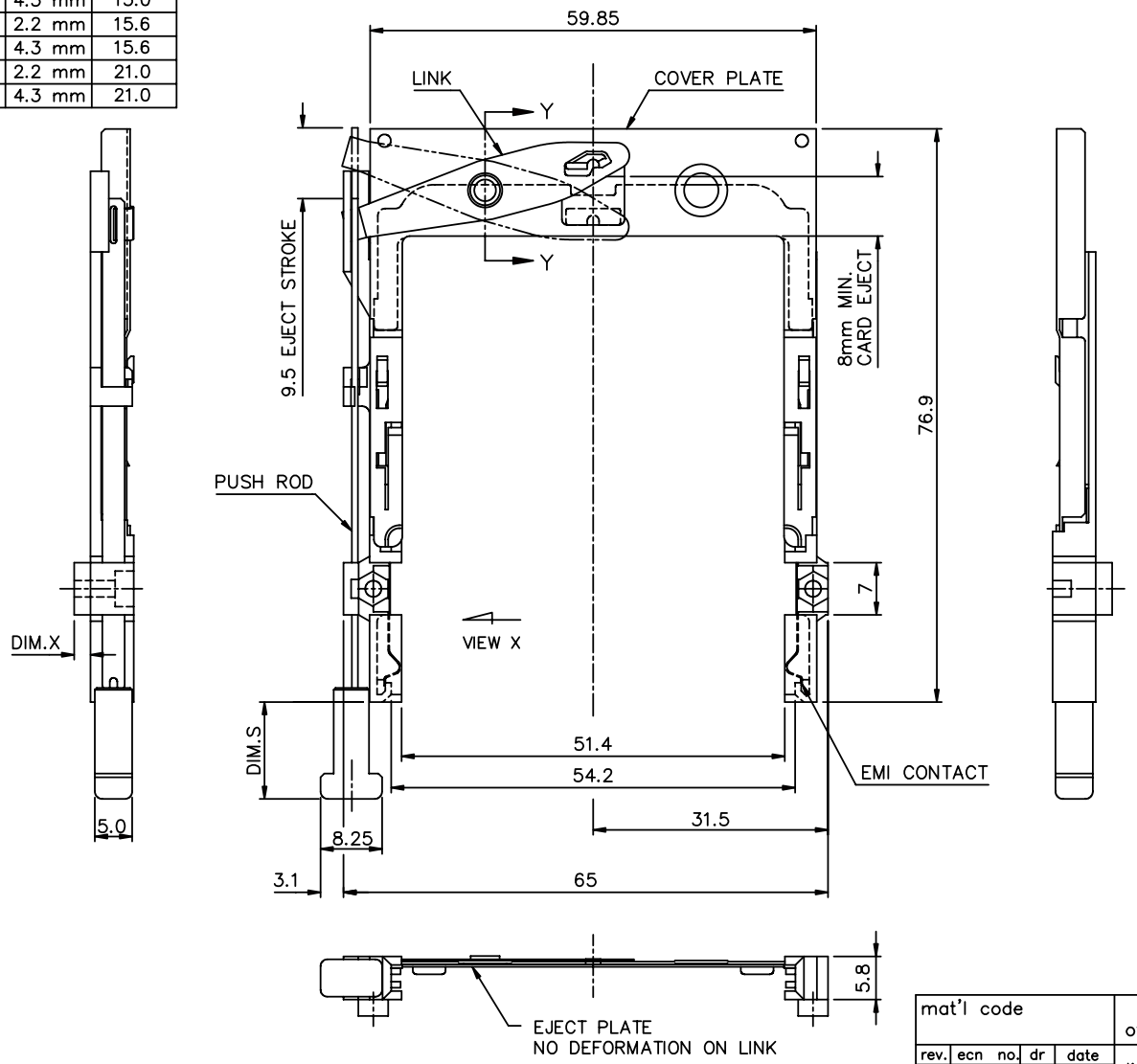

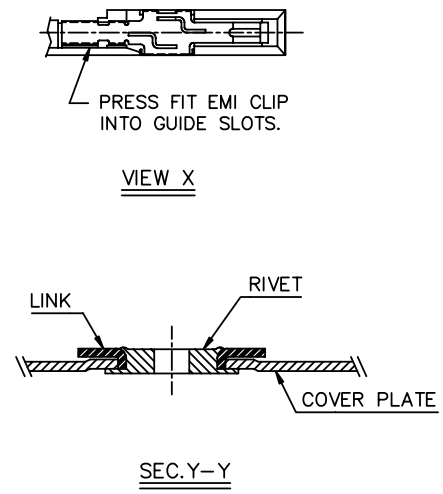

NOTE:

1. EJECT PLATE TO MOVE ALONG INSIDE WALL OF COVER PLATE SMOOTHLY AFTER ASSEMBLING WITH HEADER.
2. MATERIAL :
   PLASTIC GUIDES : POLYPHTHARAMIDE UL94V–0 BLACK
   COVER PLATE : STAINLESS STEEL
   EMI CONTACT : PHOSPHOR BRONZE
3. FINISH :
   EMI CONTACT
   CONTACT AREA 0.5 mm Au.
   UNDERPLATING 1.0 mm Ni.

mat'l code				tolerance unless otherwise specified		CUSTOMER COPY	FCI www.fciconnect.com
rev.	ecn no.	dr	date	linear	±0.30	projection	title NARROW BODY FRONT EJECT TYPE 1/2/3 MECHANISM ASS'Y
C				angles	± 2°		
				dr	WENDY CHEN 02/13/95	unit mm/inch	product family PCMCIA / code
				engr	JOSEPH HSIA 02/13/95		size A3 / dwg no. 91113
				chr	JOSEPH HSIA 02/13/95	scale 1.5:1	sheet 2 OF
				appd	D K WANG 02/13/95		
sheet	revision						
index	sheet						

Tous droits strictement reserves. Reproduction ou communication a des tiers int sous quelque forme que ce soit sans autorisation ecrite du propietaire. propriete de c BERG ELECTRONICS. Droits de reproduction BERG ELECTRONICS bv

All rights strictly reserved. Reproduction or issue to third parties in any for whatever is not permitted without written authority from the proprietor. Property of c BERG ELECTRONICS. Copyright BERG ELECTRONICS bv

PDM: Rev:C STATUS: Released Printed: Oct 12, 2010

Mouser Electronics

Authorized Distributor

Click to View Pricing, Inventory, Delivery & Lifecycle Information:

FCI:

91113-12CA 91113-14CA 91113-12CALF 91113-04CA 91113-02CA