THIS DRAWING IS UNPUBLISHED. RELEASED FOR PUBLICATION ,19 .
© COPYRIGHT 19 BY AMP INCORPORATED. ALL RIGHTS RESERVED.

LOC	DIST
DY	-

REVISIONS

P	LTR	DESCRIPTION	DATE	DWN	APVD
	01	REVISED PER ECO-09-026459	28NOV09	KK	AEG

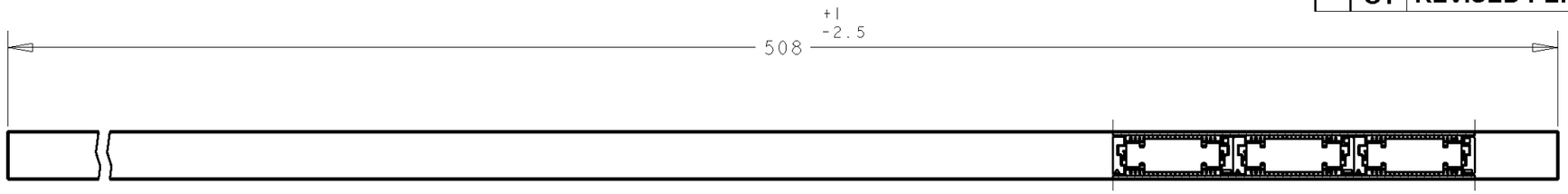

SECT "A"-"A"

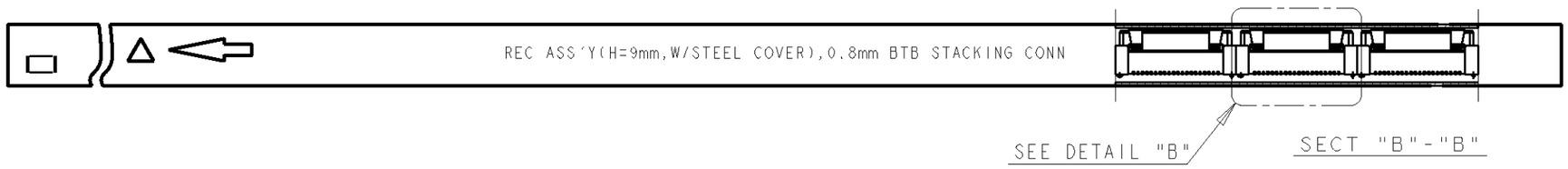

SECT "B"-"B"

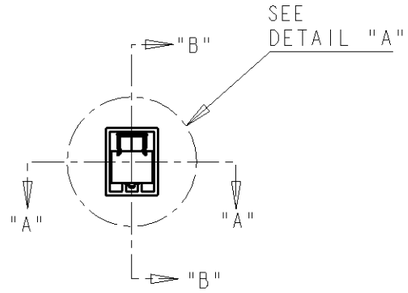

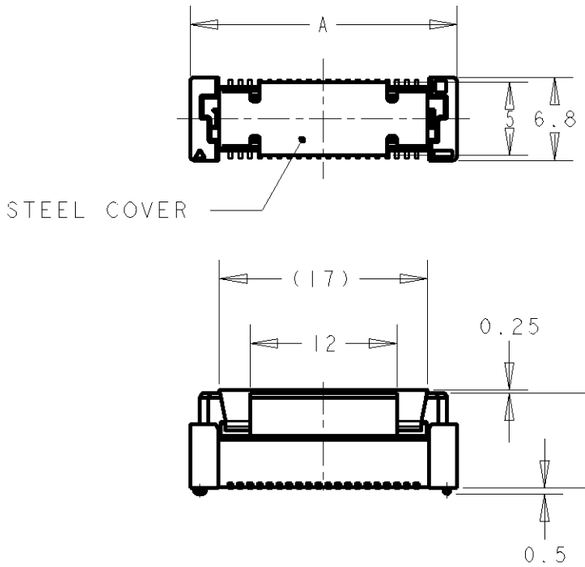

DETAIL "B"
(SCALE 2-1)

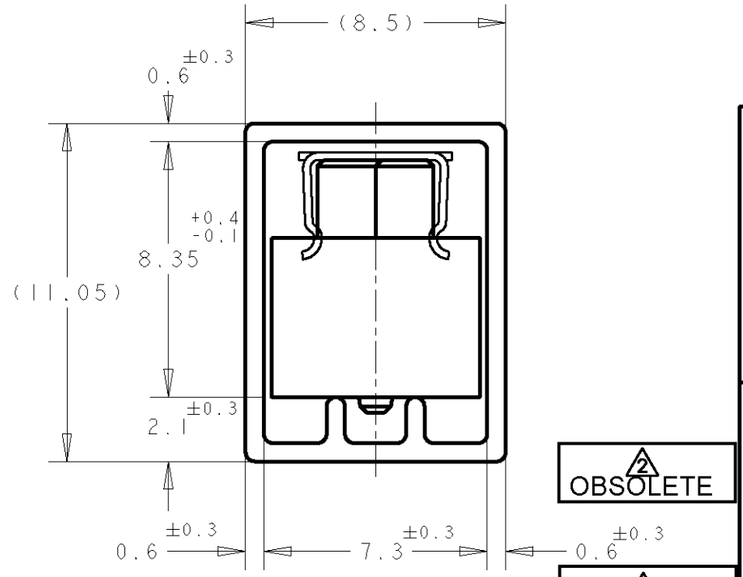

WITH STEEL COVER

DETAIL "A"
(SCALE 5-1)

REMARKS	QTY /TUBE	A	CONN P/N	POS.	PART NO.
△1	5	85.8	1- △ -0	200	8- △ -0
	6	77.8	-9	180	7- -9
	6	69.8	-8	160	7- -8
	7	61.8	-6	140	7- -6
	9	53.8	-5	120	7- -5
	10	45.8	-4	100	7- -4
	11	37.8	-3	80	7- -3
	14	29.8	-2	60	7- -2
	18	21.8	5084613-1	40	7-5179232-1
△2 OBSOLETE	5	85.8	6- △ -0	200	6- △ -0
	6	77.8	5- -9	180	5- -9
	6	69.8	5- -8	160	~~5- -8~~
	7	61.8	5- -6	140	~~5- -6~~
	9	53.8	5- -5	120	5- -5
	10	45.8	5- -4	100	5- -4
	11	37.8	5- -3	80	~~5- -3~~
	14	29.8	5- -2	60	~~5- -2~~
	18	21.8	5-5179009-1	40	~~5-5179232-1~~

NOTE;

△1 30"u AU PLATING

△2 OBSOLETE PARTS: OBSOLETE CIS STREAMLINING PER D.RENAUD/D.SINISI

THIS DRAWING IS A CONTROLLED DOCUMENT FOR AMP INCORPORATED. IT IS SUBJECT TO CHANGE AND THE CONTROLLING ENGINEERING ORGANIZATION SHOULD BE CONTACTED FOR THE LATEST REVISION.

DIMENSIONS: mm

TOLERANCES UNLESS OTHERWISE SPECIFIED:

0 PLC	±-
1 PLC	±0.20
2 PLC	±0.25
3 PLC	±0.30
4 PLC	±-
ANGLES	±3°

MATERIAL -

FINISH -

DWN FLORENCE TAN 15SEP04
CHK ERIC TNG
APVD SF LIFONG
PRODUCT SPEC -
APPLICATION SPEC -
WEIGHT -

tyco Electronics

Tyco Electronics (Singapore) Pte. Ltd.

NAME REC ASS'Y 9H TYPE WITH STEEL COVER (TUBE PACK) FOR FH 0.8mm PITCH B-T-B CONNECTOR

SIZE	CAGE CODE	DRAWING NO
A3	00779	C-5179232

CUSTOMER DRAWING

SCALE 1:1 SHEET 1 OF 1 REV 01

AMP 1470-19 REV 09MAY94

Pro/ENGINEER DRAWING

PROJ No. 593-312