DWG. SIZE	DWG. NO.
D	065–1033

REVISIONS

SYM.	E.C.N.	DATE	APVD.

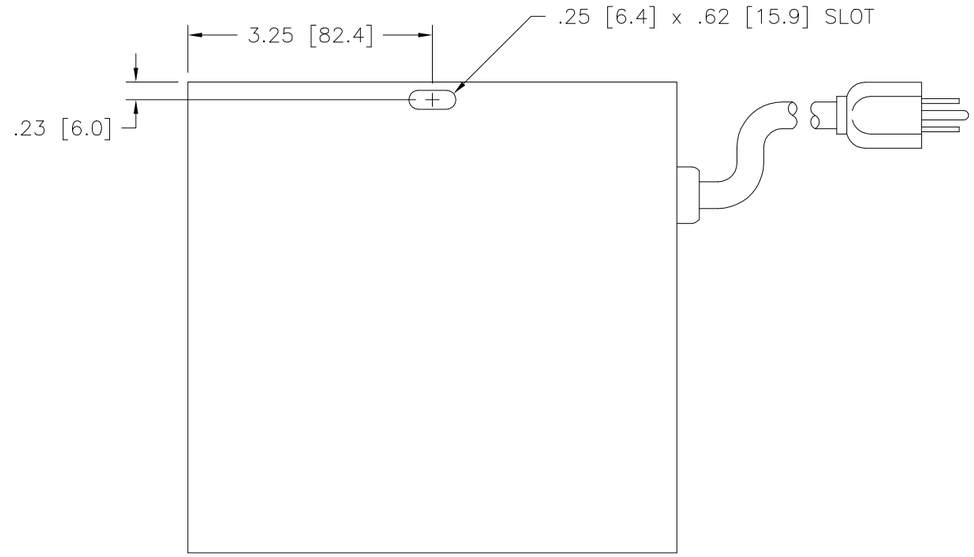

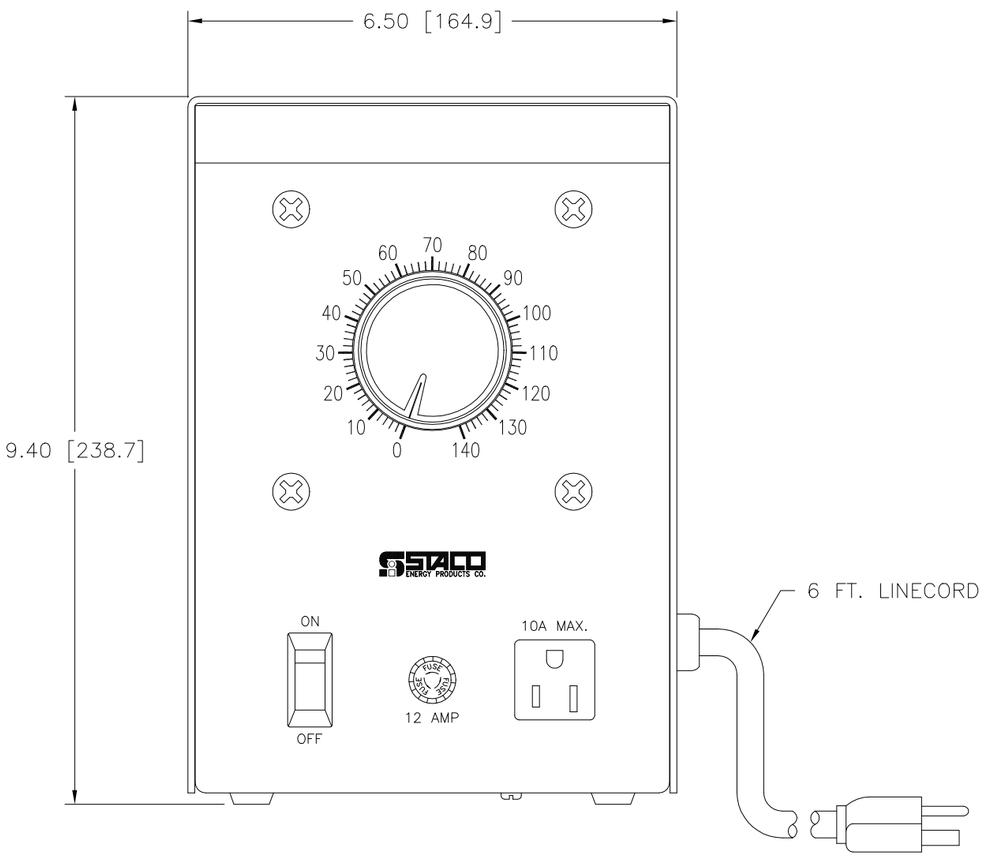

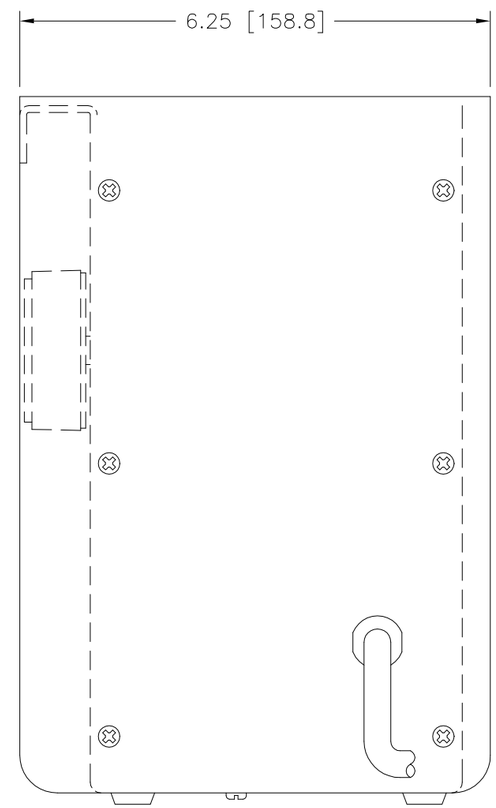

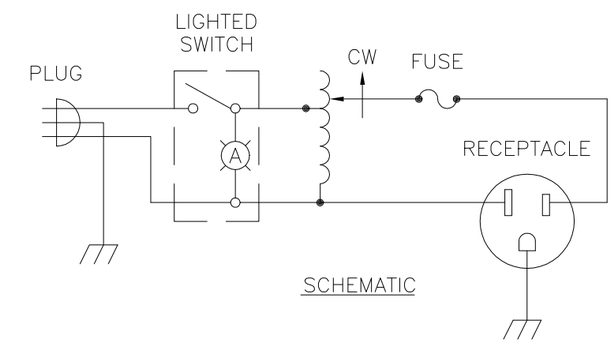

SCHEMATIC

SPECIFICATIONS					
WIRING	INPUT		OUTPUT		
	VOLTS	HERTZ	VOLTS	CONSTANT CURRENT LOAD	
				MAX. AMPS	MAX. KVA
SINGLE PHASE	120	50/60	0–140	10	1.4

UNLESS OTHERWISE SPECIFIED. TOLERANCE IS ±
DECIMALS .XX .06 .XXX .005 HOLES .01 ANGLES 1° DRAFT 1–1/2°

UNITS IN [mm]

MATERIAL :

ALL DIMENSIONS APPLY AFTER PLATING

TITLE: SPEC. CONTROL DRAWING
VARIABLE AC POWER SOURCE
MODEL: L1010B

STACO ENERGY PRODUCTS CO.
A COMPONENTS CORPORATION OF AMERICA COMPANY
DAYTON, OHIO U.S.A.

The information and design disclosed herein was originated by and is the property of STACO ENERGY PRODUCTS CO., which reserves all patent, proprietary, design, manufacturing, reproduction, use and sale rights thereto, and to any article disclosed therein except to the extent rights are expressly granted to others. The foregoing does not apply to vendor proprietary parts.

DRAWN BY	DATE	FIRST USED ON	DO NOT SCALE DWG.	CUSTOMER APPROVAL	DATE
S.A. SMITH	3/5/99				
CHECKER	DATE	WEIGHT APPROX.	CODE IDENT. NO. 83008	DWG. SIZE D	DWG. NO. 065–1033
ENGINEER	DATE	SCALE 1=1	SHEET 1 OF 1		