THIS DRAWING IS UNPUBLISHED. RELEASED FOR PUBLICATION -,- .
© COPYRIGHT - By - ALL RIGHTS RESERVED.

LOC	DIST
CM	00

REVISIONS

P	LTR	DESCRIPTION	DATE	DWN	APVD
	Y2	REVISED PER ECR-12-011660	24JAN13	KH	TM

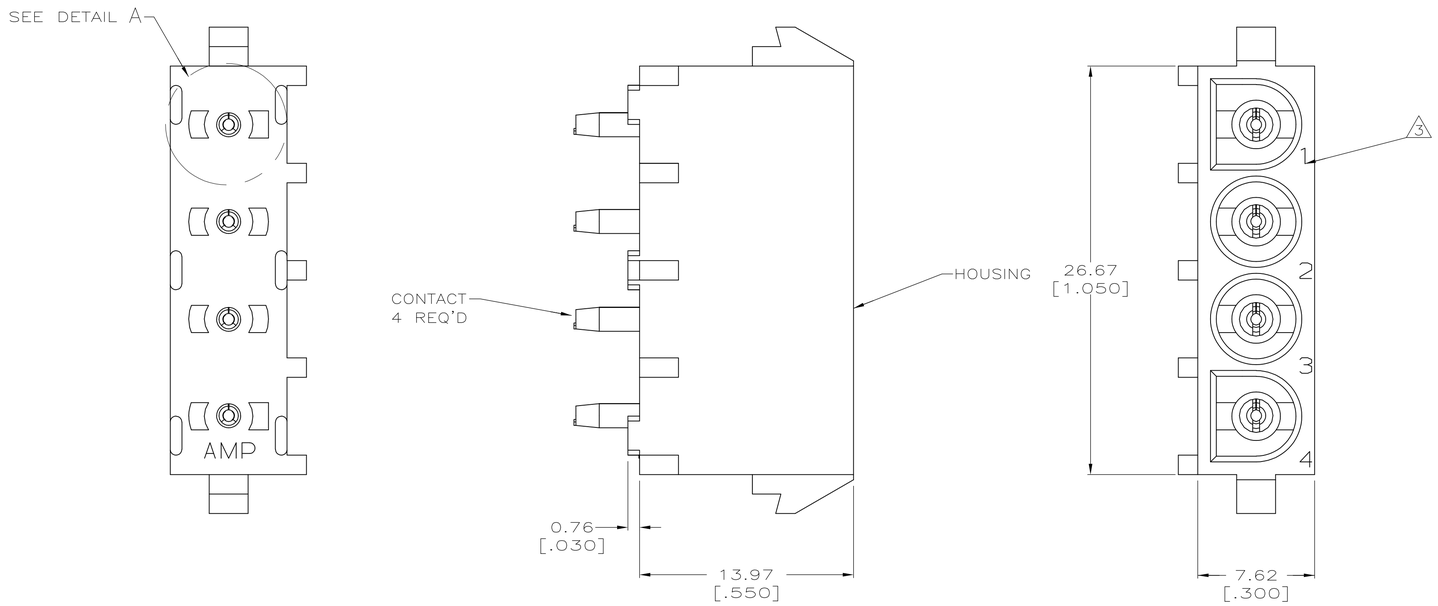

1 PARTS COMPLY TO AMP SOLDERABILITY SPECIFICATION 109-11-3.

2 CONTACT IS PLATED OVERALL WITH 0.00127 [.000050] NICKEL, THEN 0.00076 [.000030] GOLD OVER CONTACT LENGTH INDICATED AND MATTE TIN LEAD ON SOLDER TAIL END.

3 CIRCUIT IDENTIFICATION CHARACTERS ARE ADJACENT TO THE INDICATED CAVITIES, BUT LOCATION AND ORIENTATION MAY DIFFER FROM PRINT.

4 DIMENSIONS IN BRACKETS ARE IN INCHES.

5 DRAIN HOLES LOCATED AS SHOWN.
OPTIONAL CONSTRUCTION – ALL DRAIN HOLES LOCATED 90° AS SHOWN IN DETAIL A.

6 CONTACT IS PLATED OVERALL WITH 0.00127 [.000050] NICKEL, THEN 0.00076 [.000030] GOLD OVER CONTACT LENGTH INDICATED AND MATTE TIN ON SOLDER TAIL END.

7 SUPERSEDED BY 350430-4

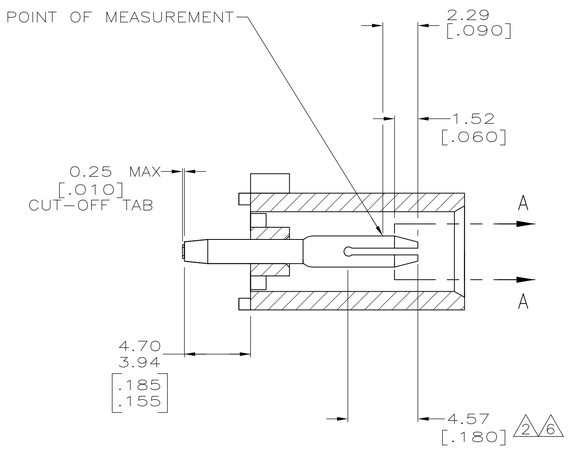

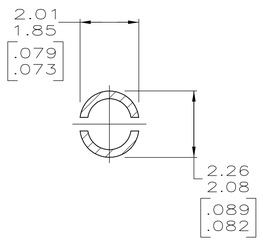

SECTION A–A
SCALE 10:1

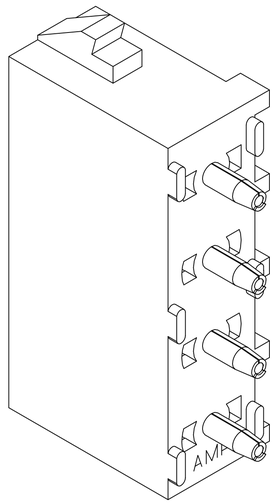

3–DIMENSIONAL MODEL
NTS

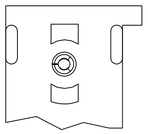

DETAIL A
OPTIONAL CONSTRUCTION
5

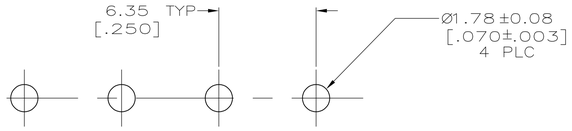

RECOMMENDED MOUNTING HOLE PATTERN
FOR 1.57 [.062] THICK P.C. BOARD

PIN CONTACT MATERIAL AND FINISH	HOUSING MATERIAL	PART NUMBER
PHOSPHOR BRONZE, GOLD (6)	NYLON, UL94V-2,NATURAL	350430-4
(7) PHOSPHOR BRONZE, GOLD (2)	NYLON, UL94V-2,NATURAL	350430-2
PHOSPHOR BRONZE, PRE-TIN	NYLON, UL94V-2,NATURAL	350430-1

THIS DRAWING IS A CONTROLLED DOCUMENT.

DIMENSIONS: mm [INCHES]

TOLERANCES UNLESS OTHERWISE SPECIFIED:
0 PLC ± –
1 PLC ± –
2 PLC ± 0.13 [.005]
3 PLC ± –
4 PLC ± –
ANGLES ± 0°30'

MATERIAL: SEE TABLE
FINISH: SEE TABLE

DWN R. LEWIS 8-25-98
CHK R. SWING 8-25-98
APVD M.TRULL 8-25-98
PRODUCT SPEC —
APPLICATION SPEC —
WEIGHT —

TE Connectivity

NAME: PIN HEADER ASSEMBLY, 4 CIRCUIT UNIVERSAL MATE-N-LOK™

SIZE	CAGE CODE	DRAWING NO	RESTRICTED TO
A1	00779	C-350430	—

CUSTOMER DRAWING | SCALE 5:1 | SHEET 1 OF 1 | REV Y2