Tous droits strictement reserves. Reproduction ou communication a des tiers interdite sous quelque forme que ce soit sans autorisation ecrite du propietaire. Propriete de ©BERG ELECTRONICS. Droits de reproduction BERG ELECTRONICS INC.

All rights strictly reserved. Reproduction or issue to third parties in any form whatever is not permitted without written authority from the proprietor. Property of ©BERG ELECTRONICS Copyright BERG ELECTRONICS INC.

PRODUCT NO.
SEE PRODUCT NUMBER CODE

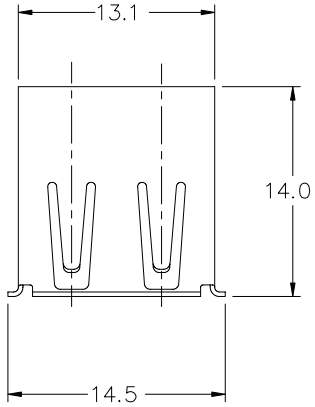

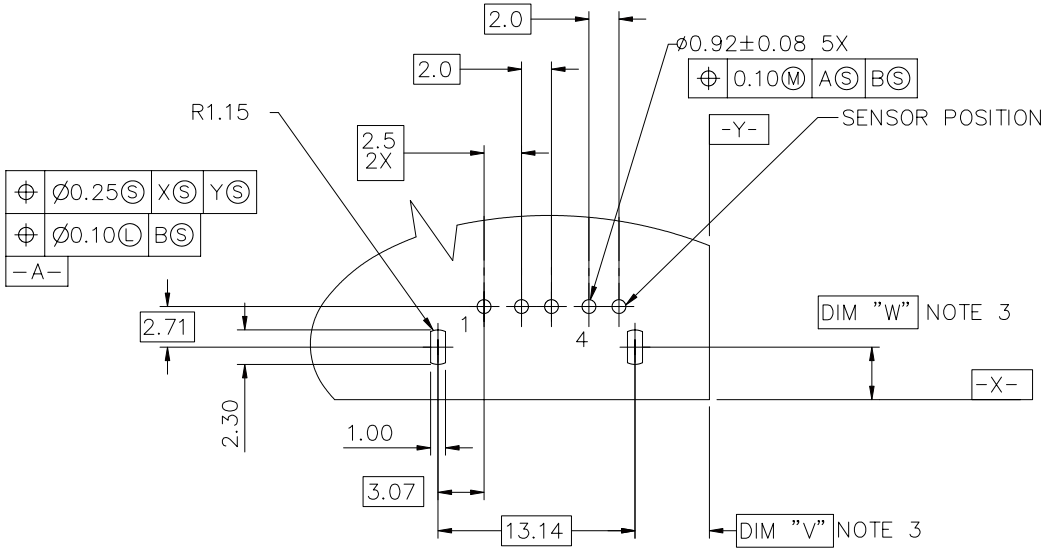

P.C. BOARD LAYOUT

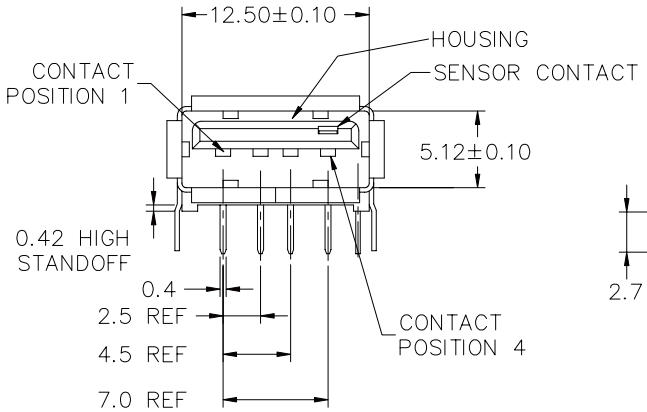

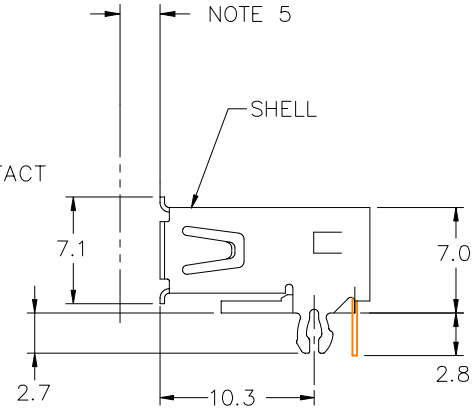

NOTES:

1. MATERIAL:
   CONTACTS: COPPER ALLOY
   SHELL: COPPER ALLOY
   HOUSING: UL 94V-0 RATED THERMOPLASTIC

2. PLATING:
   CONTACTS: 0.76µm MINIMUM GOLD FLASH OVER PALLADIUM NICKEL IN CONTACT AREA. 2.54µm MINIMUM TIN-LEAD OR TIN ON SOLDER TAILS ALL OVER 1.27µm NICKEL UNDERPLATE
   SHELL: 2.5µm BRIGHT TIN OVER NICKEL UNDERPLATE
   SEE PRODUCT NUMBER CODE

3. DATUM AND BASIC DIMENSIONS ESTABLISHED BY CUSTOMER

4. RECOMMENDED PC BOARD THICKNESS OF 1.57mm

5. 2.67mm MAXIMUM PANEL THICKNESS IF MOUNTED BEHIND PANEL

(TO BE CONTINUED)

mat'l. code NOTE 1 & 2				tolerances unless otherwise specified			CUSTOMER COPY	ELECTRONICS FCI
ltr	ecn no	dr	date		.X ±.25			
P	N04-0033	PH	07/30/04	linear	.XX		projection	title UNIV. SERIAL BUS SENSOR RECEPTACLE
R	N04-0066	PH	10/13/04		.XXX			
				angles	0° ±2°			
K	T80531	P P	12/02/98	dr	FUSSELMAN	5/7/96	mm	product family USB / code –
L	T20093	WL	04/01/02	engr	J. DAVID	5/7/96		size A4 / dwg no 72313
M	T04-0069	WL	02/18/04	chr	MACMULLIN	12/18/96	scale 2:1	sheet 1 of 2
N	T04-0283	WL	07/01/04	appd	MACMULLIN	12/18/96		
sheet index	revision	Q	Q					
	sheet	1	2					

form no. 7530-001-103

cage code 22526

PDM: Rev:R STATUS: Released Printed: Jul 28, 2010

PRODUCT NUMBER CODE

72313 – X X X X X P LF

BASE PRODUCT NUMBER

HOUSING COLOR AND SHELL PLATING OPTIONS
- 0 – WHITE+SHELL TIN/LEAD & NICKEL PLATING
- 1 – BLACK+SHELL TIN/LEAD & NICKEL PLATING
- 2 – WHITE+SHELL NICKEL PLATING ONLY
- 3 – BLACK+SHELL NICKEL PLATING ONLY
- 4 – BLACK(NYLON 66)+NICKEL PLATING ONLY
- 5 – BLACK(HIGH TEMPERATURE RESIN)+NICKEL PLATING ONLY
- 6 – WHITE(HIGH TEMPERATURE RESIN)+BRIGHT TIN & NICKEL PLATING
- 7 – BLACK(HIGH TEMPERATURE RESIN)+BRIGHT TIN & NICKEL PLATING
- 8 – WHITE(HIGH TEMPERATURE RESIN)+NICKEL PLATING ONLY

SHELL OPTION
- 0 – NO BACK SHIELD

MOUNTING HOLE OPTIONS
- 1 – NONE

TERMINAL PLATING OPTION
- 0 – WHEN NO "LF" MARK. 50u" Ni UNDERPLATE
  30u" GXT CONTACT AREA
  100u" TIN/LEAD TAIL AREA
- 2 – WHEN NO "LF" MARK. 1.27µm Ni UNDERPLATE
  0.76µm/30µ" GOLD CONTACT AREA
  2.54µm TIN/LEAD TAIL AREA
- 3 – WHEN WITH "LF" MARK. 50u" Ni UNDERPLATE
  30u" GXT CONTACT AREA
  100u" TIN TAIL AREA

PACKAGING OPTIONS
- B – TUBES
- R – TAPE & REEL

DATE CODE

LEAD FREE MARK
WHEN TERMINAL PLATING OPTION IS 3
AND HOUSING AND SHELL PLATING OPTION IS 5, 6, 7 OR 8

(CONTINUED)

6. **If lead free p/n, a lead free label will appear at packing**
7. If lead free p/n, the housing will withstand exposure to 260° peak temperature for 40 senconds in a convection, infra-red or vapor phase reflow oven
8. If lead free p/n, the product meets the requirements of the European Union Directive of Restrictions for Hazardous Substances (Directive 2002/95/EC) and can be processed in the process conditions for which the product is developed. FCI, its subsidiaries and affiliates ("FCI") provides the above data and information in good faith based upon current knowledge and experience, but makes no warranty that such data or information is free from error, is complete or is sufficient for user's intended purpose EVEN IF MADE KNOWN TO FCI. FCI specifically disclaims any warranty, express or implied, and assumes no liability with respect to the effectiveness or safety of the products listed above. Each user must make its own determination as to the suitability of FCI's products and materials for its own particular purposes, and must assure that its products fabricated from FCI's products and materials are safe and lawful. It is the user's responsibility to assure proper use and disposal of FCI's products and materials, the safety and health of user's employees and customers, and user's compliance with applicable laws and regulations

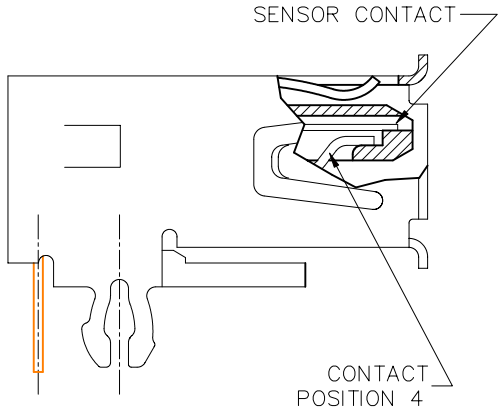

mat'l. code				tolerances unless otherwise specified			CUSTOMER COPY	BERG ELECTRONICS
ltr	ecn no	dr	date	linear	.X ±.25		projection	title UNIV. SERIAL BUS SENSOR RECEPTACLE
R					.XX			
					.XXX			
				angles	0° ±2°			
				dr	FUSSELMAN	5/7/96	mm	product family USB / code –
				engr	J.DAVID	5/7/96		size A4 / dwg no 72313 / sheet 2 of
				chr	MACMULLIN	12/18/96	scale 2:1	
				appd	MACMULLIN	12/18/96		
sheet index	revision sheet							cage code 22526

All rights strictly reserved. Reproduction or issue to third parties in any form whatever is not permitted without written authority from the proprietor. Property of ©BERG ELECTRONICS Copyright BERG ELECTRONICS INC.

Tous droits strictement reserves. Reproduction ou communication a des tiers interdite sous quelque forme que ce soit sans autorisation ecrite du propietaire. Propriete de ©BERG ELECTRONICS. Droits de reproduction BERG ELECTRONICS INC.