THIS DRAWING IS UNPUBLISHED. RELEASED FOR PUBLICATION - , - .
© COPYRIGHT - By - ALL RIGHTS RESERVED.

LOC	DIST
GP	00

REVISIONS

P	LTR	DESCRIPTION	DATE	DWN	APVD
	F	REVISED PER ECO-14-018700	17DEC2014	AP	SB

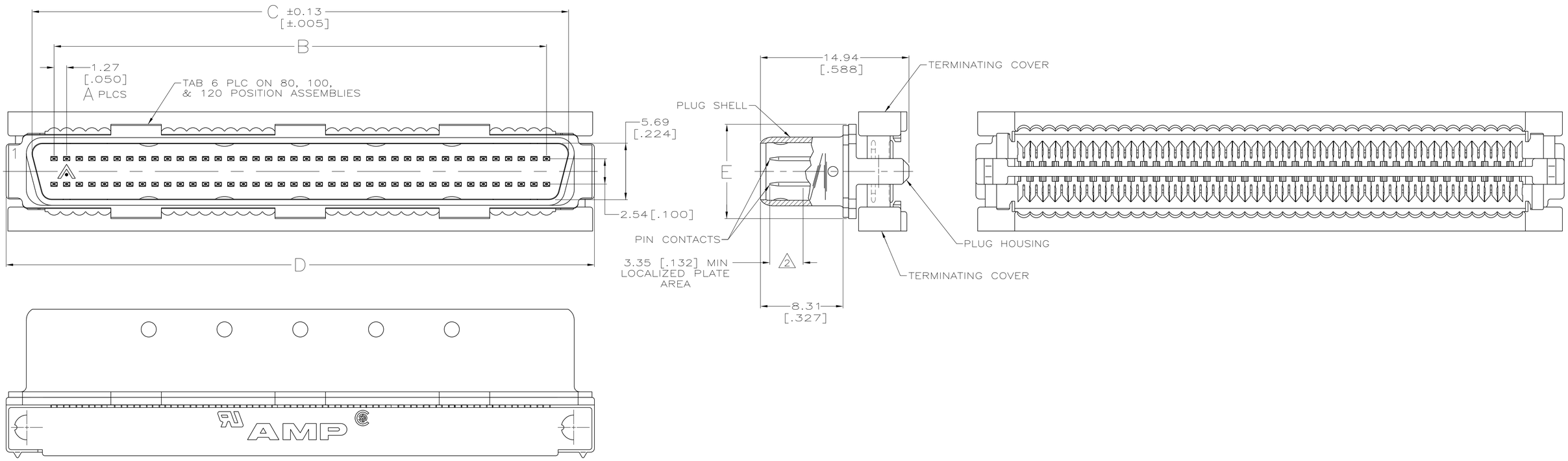

1 MATERIAL:
PIN CONTACTS – PHOSPHOR BRONZE.
PLUG SHELL – STEEL.
PLUG HOUSING & TERMINATING COVERS – UL V-0 RATED THERMOPLASTIC; COLOR: BLACK.

2 FINISH:
PIN CONTACTS – EITHER 0.76μm [.000030] MIN GOLD PLATE OR GOLD FLASH OVER PALLADIUM NICKEL PLATE, 0.76μm [.000030] MIN TOTAL IN LOCALIZED PLATE AREA, 3.00μm [.000118] MIN TIN IN TERMINATION AREA, ALL OVER 1.27μm [.000050] MIN NICKEL.
PLUG SHELL – 0.25μm [.000010] MIN TIN-NICKEL OVER 3.81μm [.000150] MIN NICKEL OVER 2.54μm [.000100] MIN COPPER.

3 RECOMMENDED WIRE: 28 AWG OR 30 AWG, SOLID OR 7 STRAND, PVC INSULATION WITH A 0.74-0.91 [.029-.036] INSULATION DIAMETER.

	FINISH	E	D	C	B	A	NO OF POSN	PART NO
	2	7.44 [.293]	24.87 [.979]	19.61 [.772]	15.24 [.600]	12	26	1-5749111-0
OBSOLETE	2	9.47 [.373]	84.56 [3.329]	79.30 [3.122]	74.93 [2.950]	59	120	~~5749111-9~~
	2	9.47 [.373]	71.86 [2.829]	66.60 [2.622]	62.23 [2.450]	49	100	5749111-8
	2	9.47 [.373]	59.16 [2.329]	53.90 [2.122]	49.53 [1.950]	39	80	5749111-7
	2	7.44 [.293]	51.54 [2.029]	46.28 [1.822]	41.91 [1.650]	33	68	5749111-6
	2	7.44 [.293]	40.11 [1.579]	34.85 [1.372]	30.48 [1.200]	24	50	5749111-4
	2	7.44 [.293]	33.76 [1.329]	28.50 [1.122]	24.13 [.950]	19	40	5749111-3
	2	7.44 [.293]	21.06 [.829]	15.80 [.622]	11.43 [.450]	9	20	5749111-1

THIS DRAWING IS A CONTROLLED DOCUMENT.

DIMENSIONS: mm [INCHES]

TOLERANCES UNLESS OTHERWISE SPECIFIED:
0 PLC ± –
1 PLC ± –
2 PLC ± 0.38 [.015]
3 PLC ± –
4 PLC ± –
ANGLES ± –

MATERIAL 1

FINISH SEE TABLE

DWN 02-23-05 G. ATTADIA – DOCK5
CHK 02-23-05 J. GERACE
APVD 02-23-05 M. WALMSLEY
PRODUCT SPEC 108-1228
APPLICATION SPEC 114-40029
WEIGHT –

TE Connectivity

NAME PLUG ASSEMBLY, AMPLIMITE .050 Series –

SIZE	CAGE CODE	DRAWING NO	RESTRICTED TO
A1	00779	C-5749111	–

CUSTOMER DRAWING

SCALE	SHEET	REV
5:1	1 OF 1	F

4805 (3/11)