THIS DRAWING IS UNPUBLISHED. RELEASED FOR PUBLICATION 20
© COPYRIGHT 20 BY - ALL RIGHTS RESERVED.

REVISIONS

P	LTR	DESCRIPTION	DATE	DWN	APVD
	C	REV. PER ECO 16-017497	12-6-16	CT	DM

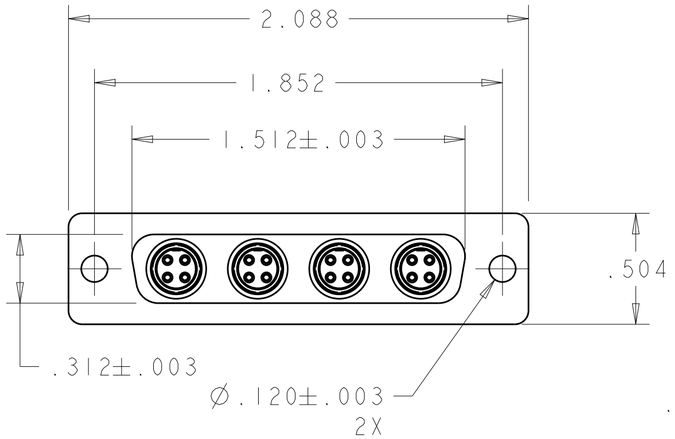

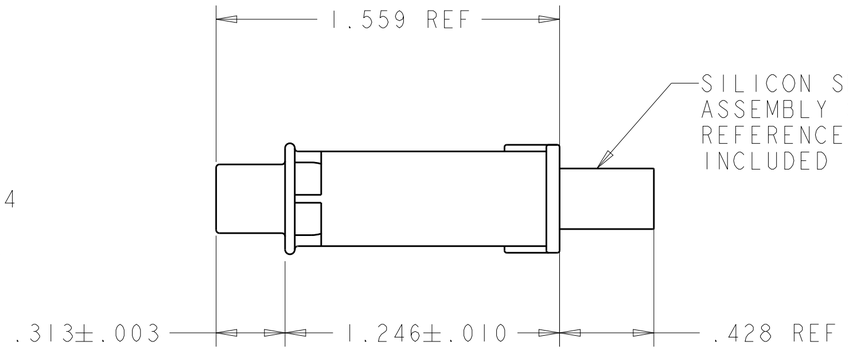

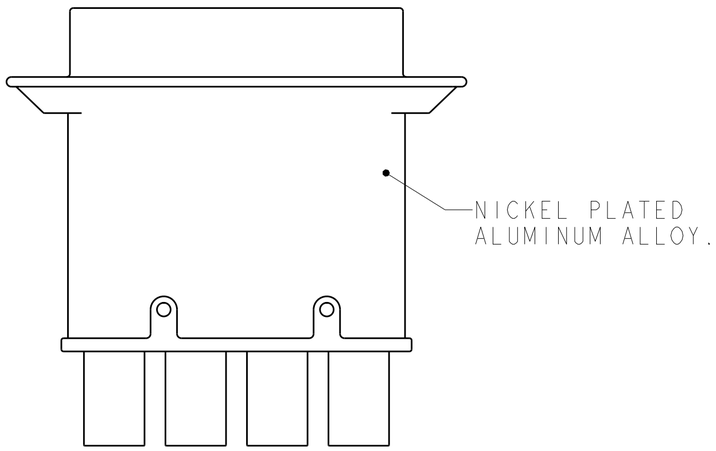

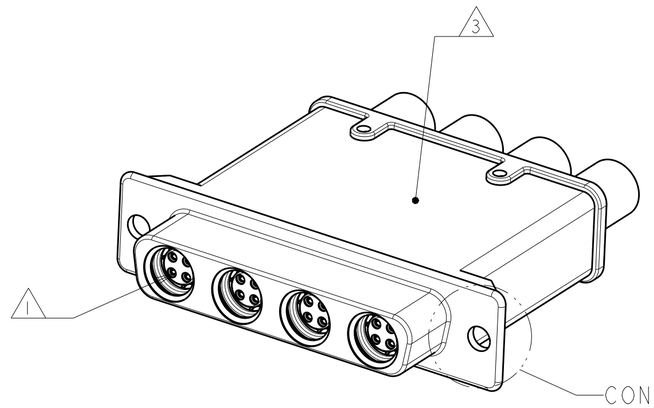

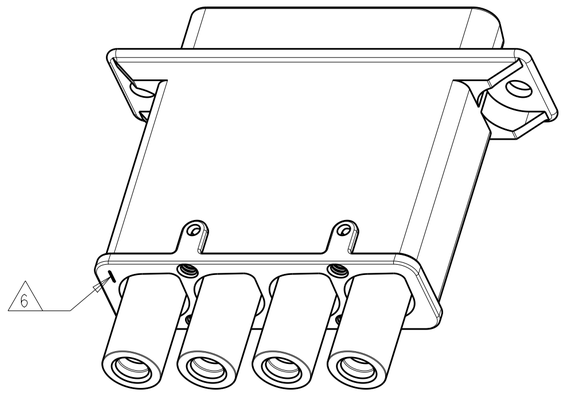

1. CONNECTOR KIT INCLUDES QUADRAX CONTACTS (TYCO ELECTRONICS PART# 1445693-3, QTY 4) FOR 100Ω CABLE.

2. RECOMMENDED CABLES :
   RAYCHEM, CEC-RWC-18687, CEC-RWC-18664
   TENSOLITE, NF24Q100, NF26Q100.

3. CONNECTOR IS MARKED WITH TYCO ELECTRONICS PART#, LOGO, CAGE CODE & DATE CODE.

4. OPERATING TEMPERATURE RANGE: -65°C TO 125°C (-85°F TO 257°F).

5. SILVER PLATED, STAINLESS STEEL RETENTION CLIPS ARE INSTALLED IN THE CONNECTOR.

6. RECESSED CIRCUIT IDENTIFICATION .007±.003 DEEP, CHARACTER HEIGHT .040±.010.

7. CONNECTOR KIT INCLUDES QUADRAX CONTACTS (TYCO ELECTRONICS PART #1445693-5, QTY 4) FOR 100Ω CABLE.

8. RECOMMENDED CABLES:
   DRAKA, F4704-4
   NEXANS, KD24

W/O CONTACTS	2000317-3
7 8	2000317-2
1 2	2000317-1
REMARKS	PART NUMBER

THIS DRAWING IS A CONTROLLED DOCUMENT.

DIMENSIONS: INCHES

TOLERANCES UNLESS OTHERWISE SPECIFIED:
0 PLC ±-
1 PLC ±.1
2 PLC ±.01
3 PLC ±.005
4 PLC ±.0020
ANGLES ±1°

MATERIAL - -
FINISH - -

DWN D. FABIAN 06JUN2007
CHK R.P.WALTER 27OCT2009
APVD B.YOHN 28OCT2009
PRODUCT SPEC -
APPLICATION SPEC -
WEIGHT -

TE Connectivity

NAME LOW PROFILE RECTANGULAR QUADRAX 4Q4 ASSY, PLUG, SIZE 3 -

SIZE A2 | CAGE CODE 00779 | DRAWING NO C-2000317 | RESTRICTED TO -

CUSTOMER DRAWING | SCALE 2:1 | SHEET 1 OF 1 | REV C

1471-9 (3/13)