DC Fans

General Specifications

Motor Protection: Auto Restart
Insulation Resistance: 10M Ohm or over with a DC500V Megger
Dielectric Withstand Voltage: AC 700V 1st
Allowable Ambient Temperature Range:
-10 degree C ~ +70 degree C (Operating)
-40 degree C ~ +70 degree C (Storage)
(non-condensing environment)

Material

Casing: Plastic (Black) UL94V-0
Impeller: Plastic (Black) UL94V-0
Lead Wire: UL10368, AWG26, +Red, -Black

order part 4710KL-04W-B20-E00 Ball Bearing Fan DC Fans

4710KL panel cut out

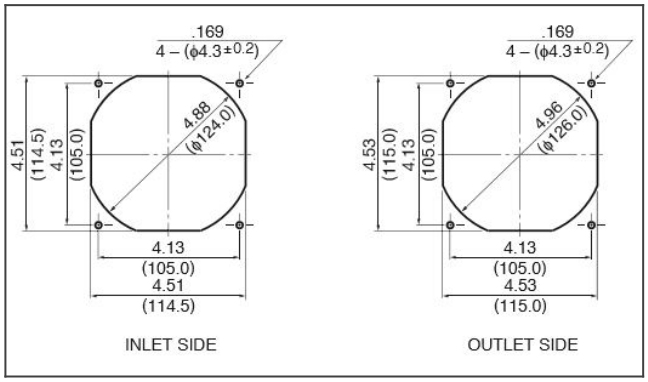

4710KL characteristic curve

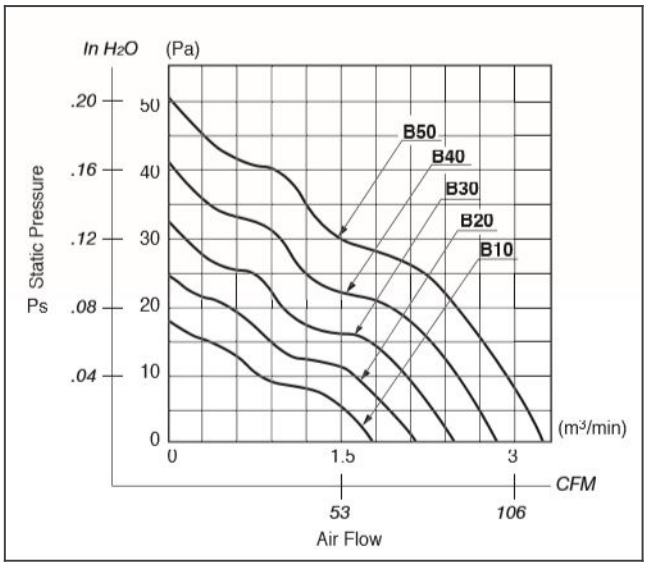

4710KL product drawing

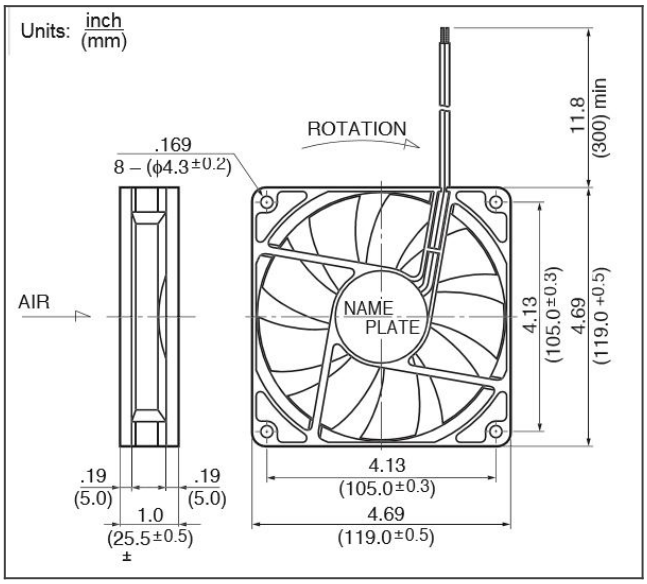

Detailed Specifications

Expected Life:	40 degree C 50,000 Hours (L10)
DC Fan:	Ball Bearing Fan
Nominal Voltage:	12[V]
Operating Voltage Lower:	6[V]
Operating Voltage Upper:	13.8[V]
Current:	0.19[A]
Input Power:	2.28[W]
Speed:	1900[min-1]
Max. Air Flow:	2.15[m3/min]
Max. Air Flow:	75.9[CFM]
Max. Static Pressure:	24.8[Pa]
Max. Static Pressure:	0.1[In H2O]
Noise:	31[dB]
Mass:	180[g]
Fan Size:	119[mm]
Fan Width:	25[mm]