THIS DRAWING IS UNPUBLISHED. RELEASED FOR PUBLICATION ,19 .
© COPYRIGHT 19 BY AMP INCORPORATED. ALL RIGHTS RESERVED.

| LOC | DIST |
|---|---|
| AA | 25 |

REVISIONS

| P | LTR | DESCRIPTION | DATE | DWN | APVD |
|---|---|---|---|---|---|
| | P | ADD: 8/6; NPR C99-007 | 03FEB99 | GG | EH |
| | P1 | REVISED PER ECO-09-020774 | 24AUG09 | KK | AEG |

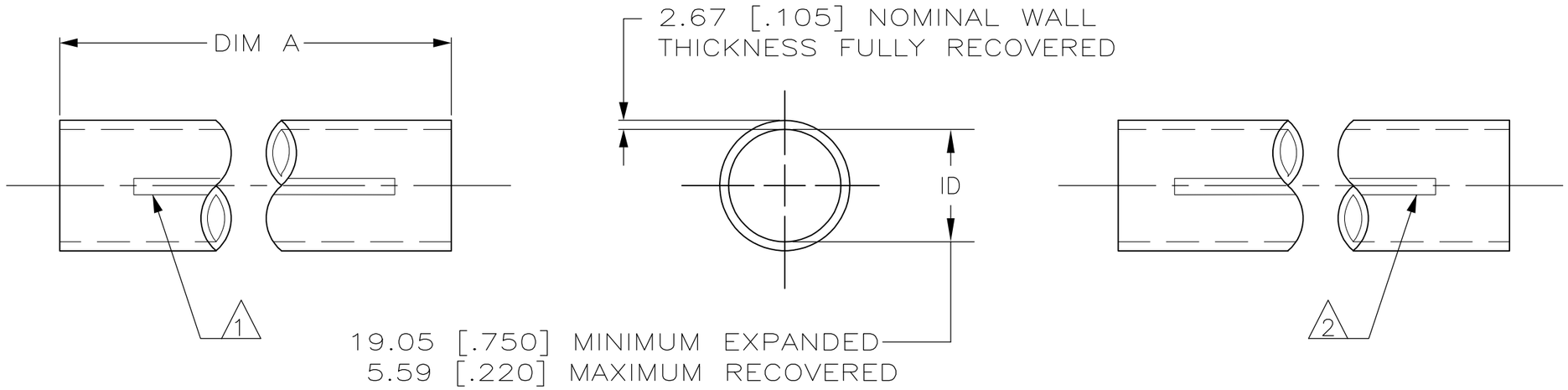


1. PRODUCT MARKED WITH AMP, AND DATE CODE WITH 6.35 [.25] HIGH CHARACTERS USING WHITE INK LOCATED ALONG THIS SURFACE. REPEATED EVERY 203.2 [8.0] INCHES.

2. PRODUCT MARKED .750 – .220/ 19mm – 5.6mm WITH 6.35 [.25] HIGH CHARACTERS USING WHITE INK LOCATED ALONG THIS SURFACE. REPEATED EVERY 203.2 [8.0].

3. SEALANT APPLIED TO TUBING THROUGHOUT LENGTH.

4. DIMENSIONS SPECIFIED WITHOUT SEALANT.

5. KIT CONSISTING OF 54053-8, 25 PIECES.

6. WEIGHT PER LINEAR FOOT: 31.7 GRAMS/.07 POUND.

7. KIT CONSISTING OF 54053-5, 2 PIECES.

8. KIT CONSISTING OF 54053-1, 1000 PIECES.

9. OBSOLETE PARTS: OBSOLETE CIS STREAMLINING PER D.RENAUD/D.SINISI

| | |
|---|---|
| 8 9 | ~~8-54053-6~~ |
| 7 9 | ~~8-54053-5~~ |
| 304.8 ±4.8 [12.00 ±.19] | 54053-8 |
| 152.4 ±4.8 [6.00 ±.19] 9 | ~~54053-5~~ |
| 50.8 ±3.3 [2.00 ±.13] | 54053-4 |
| 5 | 54053-3 |
| 76.2 ±4.8 [3.00 ±.19] 9 | ~~54053-1~~ |

THIS DRAWING IS A CONTROLLED DOCUMENT.

DIMENSIONS: mm [INCHES]

TOLERANCES UNLESS OTHERWISE SPECIFIED:
0 PLC ±–
1 PLC ±–
2 PLC ±–
3 PLC ±–
4 PLC ±–
ANGLES ±–

MATERIAL RED POLYOLEFIN

FINISH –

DWN W CHANDLER 11FEB99
CHK D. KAAT 1-26-94
APVD D. KAAT 2-1-94
PRODUCT SPEC –
APPLICATION SPEC –
WEIGHT 6

AMP Incorporated
Harrisburg PA 17105-3608

NAME AMPSULATION HWP31, HST, WITH SEALANT, .750 INCHES DIAMETER, RED

| SIZE | CAGE CODE | DRAWING NO | RESTRICTED TO |
|---|---|---|---|
| A3 | 00779 | C-54053 | – |

CUSTOMER DRAWING

SCALE NTS SHEET 1 OF 1 REV P1

AMP 1470-19 REV 23FEB95