0.5mm Pitch SMT Board to Board Connector

DF12 Series

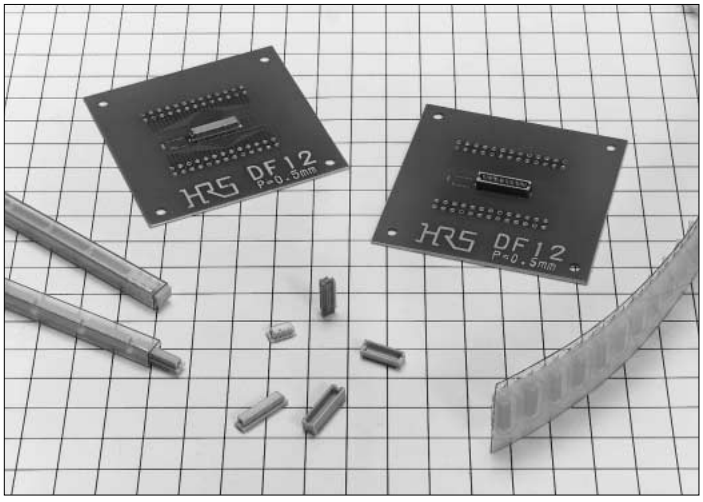

Correspond to automatic mounting

The vacuum pick-up area secures the automatic mounting machine for pick and place.

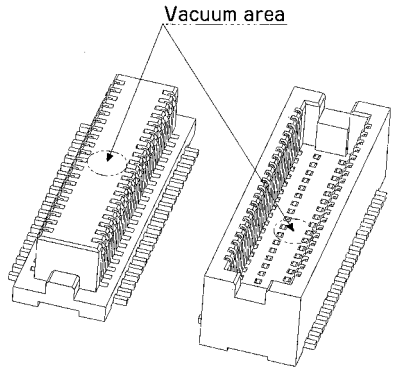

■Features

1. Broad Variations of Stacking Height

In addition to 0.5mm pitch ultra-miniature size connector, the stacking height of 3mm, 3.5mm, 4mm, and 5mm are provided.

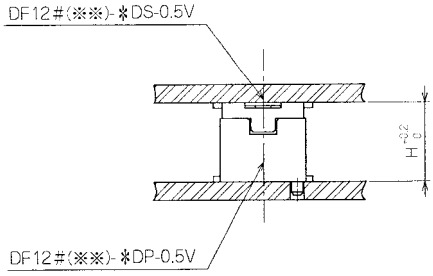

Header/Receptacle	DF12#(3.0)-✱DS-0.5V Combination stacking height	DF12#-✱DS-0.5V Combination stacking height
DF12#(3.0)-✱DP-0.5V	3.0	———
DF12#(3.5)-VDP-0.5V	———	3.5
DF12#(4.0)-✱DP-0.5V	———	4.0
DF12#(5.0)-✱DP-0.5V	———	5.0

Note 1 : (✱✱) of the product name DF12# (✱✱) indicates the stacking height.
Note 2 : The stacking height doesn't include the soldering paste thickness.

[Stacking Height Variation]

Stacking Height		3.0mm	3.5mm	4.0mm	5.0mm
Number of Contacts	20 contacts	○	○	○	○
	30 contacts	○	○	○	○
	32 contacts	○	———	———	———
	38 contacts	○	○	○	○
	40 contacts	○	○	○	○
	50 contacts	○	○	○	○
	60 contacts	○	○	○	○

2. Corresponding to Automatic Mounting

The connector has the vacuum pick-up area to enable automatic mounting with the embossed tape packaging.

3. Metal Fitting Available

The product including the metal fitting to prevent solder peeling is provided, considering the mounting on FPC.

■Applications

Mobile phone, LCD(Liquid Crystal Display), MO(Optical Disk), Note PC

■Product Specifications

Rating	Rated Current 0.3A Rated Voltage 50V AC	Operating Temperature Range -45～+125℃ Note 1. Operating Humidity Range 40～80%	Storage Temperature Range -10～+60℃ Note 2. Storage Humidity Range 40～70%

Item	Specification	Condition		
1. Insulation Resistance	500Ω min.	Measured at 100V DC		
2. Withstand voltage	Neither short or insulation breakdown	150V AC for 1 minute		
3. Contact Resistance	50mΩ max.	Measured at 100mA		
4. Vibration	Electrical discontinuity, 1μS max. 1	0~55Hz and single amplitude 0.75mm in 3 directions for 2 hours, respectively.		
5. Moisture Resistance	Contact resistance: 50mΩ max. Insulation resistance:500MΩ min	Exposed to temperature 40±2℃ and humidity 90~95% for 96 hours		
6. Temperature Cycle	Contact resistance: 50mΩ max. Insulation resistance:500MΩ min	(-55℃: 30 minutes 5~35℃: 10 minutes 85℃: 30 minutes 5~35℃: 10 minutes) 5 cycles		
7. Operating Life	Contact resistance: 50mΩ max.	50 cycles		
8. Resistance to Soldering heat	No resion area fusion to degrade performance	SMT Type	Reflow : According to the recommended temperature profile	Manual soldering : Soldering iron temperature: 300℃for 3 seconds

Note 1: Temperature rise included when energized
Note 2: This storage indicates a long-term storage state for the unused product before the board mounted.
The operating temperature and humidity ranges are applied to the non-energized state after the connector has been installed to the board.
Note 3: The above standards represent this series. Individual formal agreement should be based on the "Specification".

■Material

Product	Part	Material	Finish	Remarks
Receptacle/Header	Insulator	Polyamide	Beige	UL94-V0
	Contact	Phosphor copper	Gold plating	————
	Fitting	Brass	Solder plating	————

■Ordering Information

Please determine the specific product. If needed, please select and order products from the product No. as listed on catalog page A299~A305.

●Receptacle

DF 12 # (※※) - ＊ DS - 0.5 V (＊＊)
❶ ❷ ❸ ❹ ❺ ❻ ❼ ❽ ❾

❶ Series Name : DF
❷ Series No. : 12
❸ Type Symbol

Symbol	Fitting	Boss
None	○	○
A	×	○
B	○	×
C	×	×

❹ Stacking height
3.0 : 3.0mm
None : 3.5～5.0mm
❺ Number of Contacts : 20, 30, 32, 36, 40, 50, 60
(The 32 contacts connector includes the stacking height 3mm only.)
❻ Connector Type
DS : Double-row receptacle
❼ Contact Pitch : 0.5mm
❽ Contact Style
V: Straight SMT
❾ Packaging Type
(81) : Embossed tape packaging

●Header

DF 12 # (※※) - ＊ DP - 0.5 V (＊＊)
❶ ❷ ❸ ❹ ❺ ❻ ❼ ❽ ❾

❸ Type Symbol

Symbol	Fitting	Boss
None	○	○
B	○	×
D	×	○
E	×	×

❹ Stacking height

Indication	Stacking Height
3.0	3.0mm
3.5	3.5mm
4.0	4.0mm
5.0	5.0mm

❻ Connector Type
DP: Double-row pin header

■Receptacle With metal fitting

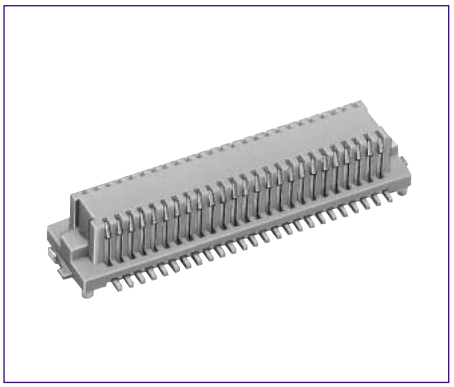

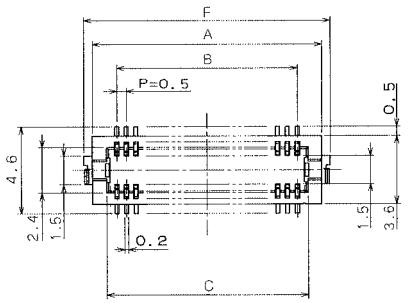

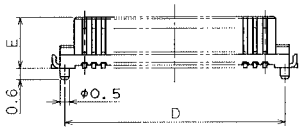

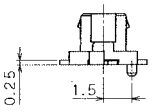

[Specific No.] – ✻✻, (✻✻)
(81): Gold plating embossed tape packaging

●Product Height: 3mm Product

Unit: mm

Product No.	HRS No.	Number of Contacts	A	B	C	D	E	F	Remarks
DF12 (3.0)-20DS-0.5V (✻✻)	CL537-0603-3-✻✻	20	7.1	4.5	5.6	6.6	2.2	8.0	With metal fitting With boss
DF12 (3.0)-30DS-0.5V (✻✻)	CL537-0605-9- ✻✻	30	9.6	7.0	8.1	9.1		10.5	
DF12 (3.0)-32DS-0.5V (✻✻)	CL537-0612-4- ✻✻	32	10.1	7.5	8.6	9.6		11.0	
DF12 (3.0)-36DS-0.5V (✻✻)	CL537-0606-1- ✻✻	36	11.1	8.5	9.6	10.6		12.0	
DF12 (3.0)-40DS-0.5V (✻✻)	CL537-0607-4- ✻✻	40	12.1	9.5	10.6	11.6		13.0	
DF12 (3.0)-50DS-0.5V (✻✻)	CL537-0609-0- ✻✻	50	14.6	12.0	13.1	14.1		15.5	
DF12 (3.0)-60DS-0.5V (✻✻)	CL537-0611-1- ✻✻	60	17.1	14.5	15.6	16.6		18.0	
DF12B (3.0)-20DS-0.5V (✻✻)	CL537-0653-1- ✻✻	20	7.1	4.5	5.6	——	2.2	8.0	With metal fitting Without boss
DF12B (3.0)-30DS-0.5V (✻✻)	CL537-0655-7- ✻✻	30	9.6	7.0	8.1	——		10.5	
DF12B (3.0)-32DS-0.5V (✻✻)	CL537-0662-2- ✻✻	32	10.1	7.5	8.6	——		11.0	
DF12B (3.0)-36DS-0.5V (✻✻)	CL537-0656-0- ✻✻	36	11.1	8.5	9.6	——		12.0	
DF12B (3.0)-40DS-0.5V (✻✻)	CL537-0657-2- ✻✻	40	12.1	9.5	10.6	——		13.0	
DF12B (3.0)-50DS-0.5V (✻✻)	CL537-0659-8- ✻✻	50	14.6	12.0	13.1	——		15.5	
DF12B (3.0)-60DS-0.5V (✻✻)	CL537-0661-0- ✻✻	60	17.1	14.5	15.6	c		18.0	

●Stacking Height: 3.5~5mm Product

Unit: mm

Product No.	HRS No.	Number of Contacts	A	B	C	D	E	F	Remarks
DF12-20DS-0.5V (✻✻)	CL537-0003-6- ✻✻	20	7.1	4.5	5.6	6.6	2.7	8.0	With metal fitting With boss
DF12-30DS-0.5V (✻✻)	CL537-0005-1- ✻✻	30	9.6	7.0	8.1	9.1		10.5	
DF12-36DS-0.5V (✻✻)	CL537-0006-4- ✻✻	36	11.1	8.5	9.6	10.6		12.0	
DF12-40DS-0.5V (✻✻)	CL537-0007-7- ✻✻	40	12.1	9.5	10.6	11.6		13.0	
DF12-50DS-0.5V (✻✻)	CL537-0009-2- ✻✻	50	14.6	12.0	13.1	14.1		15.5	
DF12-60DS-0.5V (✻✻)	CL537-0011-4- ✻✻	60	17.1	14.5	15.6	16.6		18.0	
DF12B-20DS-0.5V (✻✻)	CL537-0303-0- ✻✻	20	7.1	4.5	5.6	——	2.7	8.0	With metal fitting Without boss
DF12B-30DS-0.5V (✻✻)	CL537-0305-5- ✻✻	30	9.6	7.0	8.1	——		10.5	
DF12B-36DS-0.5V (✻✻)	CL537-0306-8- ✻✻	36	11.1	8.5	9.6	——		12.0	
DF12B-40DS-0.5V (✻✻)	CL537-0307-0- ✻✻	40	12.1	9.5	10.6	——		13.0	
DF12B-50DS-0.5V (✻✻)	CL537-0309-6- ✻✻	50	14.6	12.0	13.1	——		15.5	
DF12B-60DS-0.5V (✻✻)	CL537-0311-8- ✻✻	60	17.1	14.5	15.6	——		18.0	

Note : Please order the embossed tape packaging product per reel. (1000 pcs./reel)

◆Embossed Carrier tape Dimensions

●Receptacle

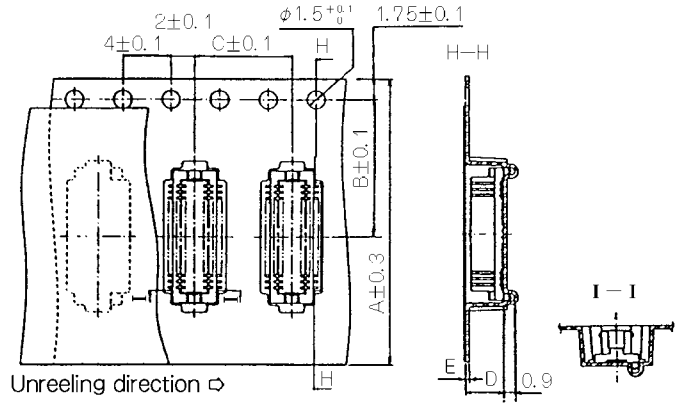

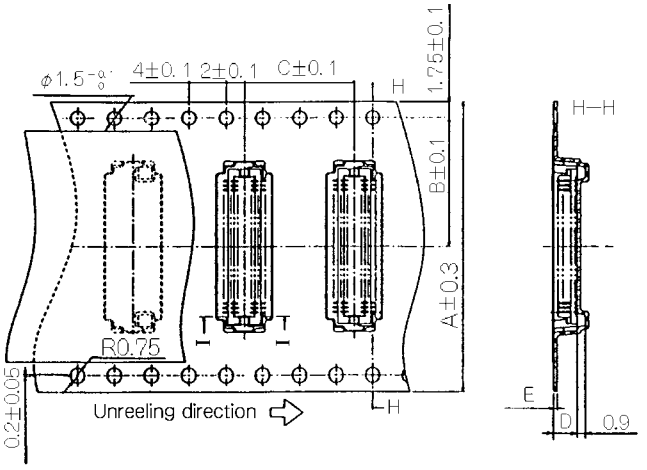

●Header

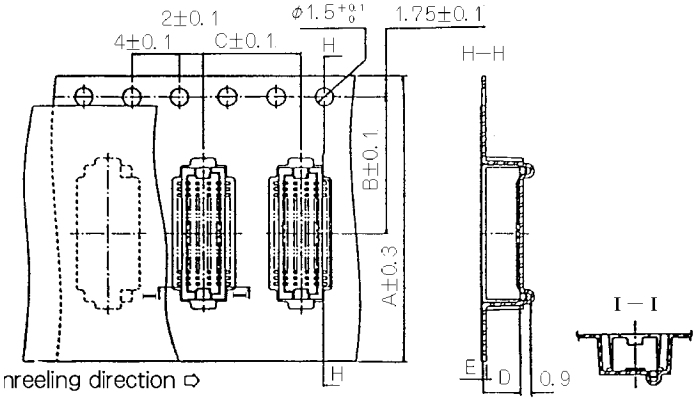

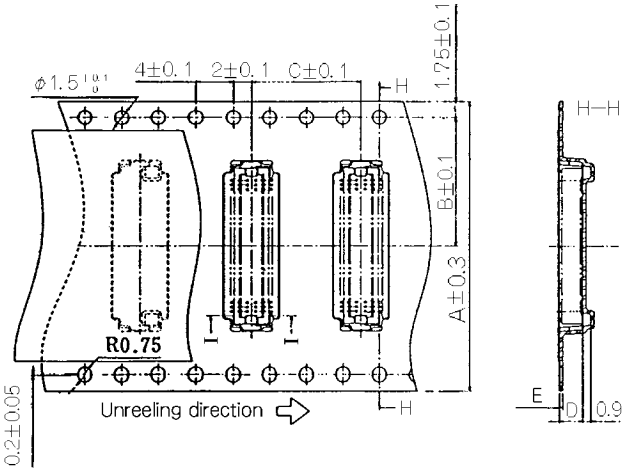

Connector	A	B	C	D	E	F	Connector	A	B	C	D	E	F
DF12# (3.0)-20DS-0.5V	16.0	7.5	12.0	2.6	0.38	16.4	DF12# (3.5)-20DP-0.5V	16.0	7.5	12.0	3.1	0.38	16.4
DF12# (3.0)-30DS-0.5V	24.0	11.5	12.0	2.6	0.38	24.4	DF12# (3.5)-30DP-0.5V	24.0	11.5	12.0	3.1	0.38	24.4
DF12# (3.0)-32DS-0.5V	24.0	11.5	12.0	2.6	0.38	24.4	DF12# (3.5)-36DP-0.5V	24.0	11.5	8.0	3.1	0.30	24.4
DF12# (3.0)-36DS-0.5V	24.0	11.5	12.0	2.6	0.38	24.4	DF12# (3.5)-40DP-0.5V	24.0	11.5	12.0	3.1	0.38	24.4
DF12# (3.0)-40DS-0.5V	24.0	11.5	12.0	2.6	0.38	24.4	DF12# (3.5)-50DP-0.5V	24.0	11.5	8.0	3.1	0.30	24.4
DF12# (3.0)-50DS-0.5V	24.0	11.5	12.0	2.6	0.38	24.4	DF12# (3.5)-60DP-0.5V	32.0	14.2	12.0	3.1	0.38	32.4
DF12# (3.0)-60DS-0.5V	32.0	14.2	12.0	2.6	0.38	32.4	DF12# (4.0)-20DP-0.5V	16.0	7.5	12.0	3.6	0.38	16.4
DF12# (3.0)-20DP-0.5V	16.0	7.5	12.0	2.6	0.38	16.4	DF12# (4.0)-30DP-0.5V	24.0	11.5	12.0	3.6	0.38	24.4
DF12# (3.0)-30DP-0.5V	24.0	11.5	12.0	2.6	0.38	24.4	DF12# (4.0)-36DP-0.5V	24.0	11.5	8.0	3.6	0.30	24.4
DF12# (3.0)-32DP-0.5V	24.0	11.5	12.0	2.6	0.38	24.4	DF12# (4.0)-40DP-0.5V	24.0	11.5	12.0	3.6	0.38	24.4
DF12# (3.0)-36DP-0.5V	24.0	11.5	12.0	2.6	0.38	24.4	DF12# (4.0)-50DP-0.5V	24.0	11.5	8.0	3.6	0.30	24.4
DF12# (3.0)-40DP-0.5V	24.0	11.5	12.0	2.6	0.38	24.4	DF12# (4.0)-60DP-0.5V	32.0	14.2	12.0	3.6	0.38	32.4
DF12# (3.0)-50DP-0.5V	24.0	11.5	12.0	2.6	0.38	24.4	DF12# (5.0)-20DP-0.5V	16.0	7.5	12.0	4.6	0.38	16.4
DF12# (3.0)-60DP-0.5V	32.0	14.2	12.0	2.6	0.38	32.4	DF12# (5.0)-30DP-0.5V	24.0	11.5	12.0	4.6	0.38	24.4
DF12#-20DS-0.5V	16.0	7.5	12.0	3.1	0.38	16.4	DF12# (5.0)-36DP-0.5V	24.0	11.5	12.0	4.6	0.38	24.4
DF12#-30DS-0.5V	24.0	11.5	12.0	3.1	0.38	24.4	DF12# (5.0)-40DP-0.5V	24.0	11.5	12.0	4.6	0.38	24.4
DF12#-36DS-0.5V	24.0	11.5	8.0	3.1	0.30	24.4	DF12# (5.0)-50DP-0.5V	24.0	11.5	8.0	4.6	0.30	24.4
DF12#-40DS-0.5V	24.0	11.5	12.0	3.1	0.38	24.4	DF12# (5.0)-60DP-0.5V	32.0	14.2	12.0	4.6	0.38	32.4
DF12#-50DS-0.5V	24.0	11.5	8.0	3.1	0.30	24.4							
DF12#-60DS-0.5V	32.0	14.2	12.0	3.1	0.38	32.4							

●Reel Dimensions

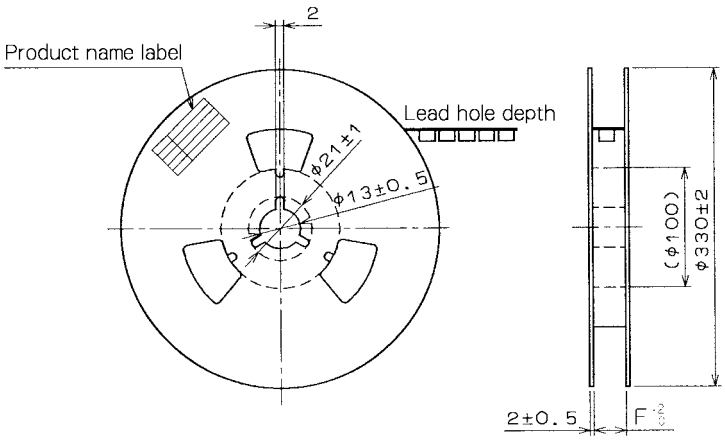

◆Recommended PCB Footprints

■DF12 with metal fitting

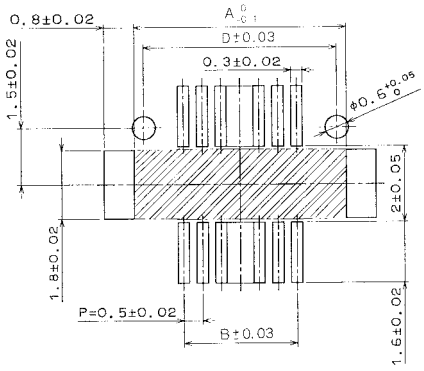

■DF12 without metal fitting

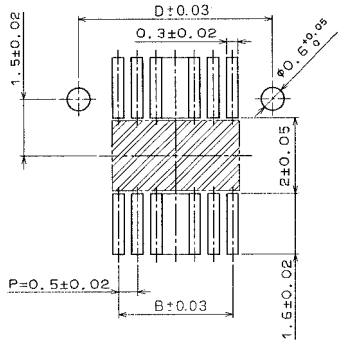

Note 1 : Refer to A299~A304 for sides A, B, and D.

Note 2 : If the boss isn't included, the boss shown in the above figure isn't required.

Note 3 : ▨ If the pattern is included in the shaded area, and not treated with resist, it could touch the connector contact .

◆Precautions for Use

1.Recommended Temperature Profile (SMT)	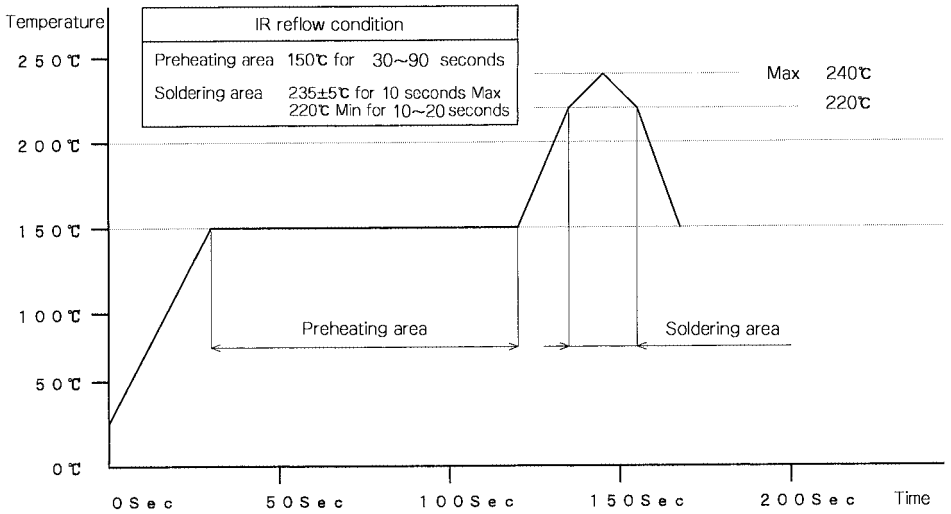 Note 1 : Maximum twice action is allowed under the same condition. However, the interval between the first and second actions must be maintained at the room temperature. Note 2 : The temperature indicates the board surface temperature In the connector lead area.
2.Recommended Manual Soldering Condition (SMT)	Soldering iron temperature: 290±10℃, Soldering time: Within 2 seconds
3.Recommended Screen Thickness (SMT)	0.12mm When the 0.15mm thickness is used, set the metal mask open area to 85% as a target.
4.Board Warp(SMT)	Maxmum 0.02mm in the connector center area, based on both connector edges
5.Cleaning Condition	Refer to "Nylon Connector Instruction Manual".
6.Cautions	■ The receptacle is designed in a structure where contacts are exposed. Touching it with bare hands would cause contact failure or electrostatic element damage. ■ Where no board is mounted, the insertion or extraction will cause damage or contact deformation. ■ Avoid retaining the board with the connector only, and fix the board by any other means than the connector. ■ Excessive scoop insertion or extraction may result in damage. ■ In the manual soldering process, don't carry out the flux coating which will cause a flux blister on the connector. ■ The color phase of this product may be slightly different from that of the formed product according to the manufacturing lot. However, the difference doesn't affect the performance.