REV	DESCRIPTION		
N/C	NEW RELEASE PER E.O. A7417		
A	REVISED PER E.O. A7729	12-14-87	L. STOLLE
B	REVISED PER E.O. A10425		
C	REVISED PER E.O. D0369	121127	

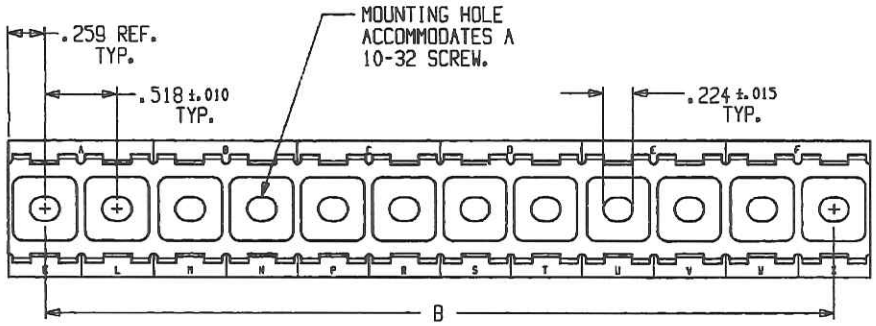

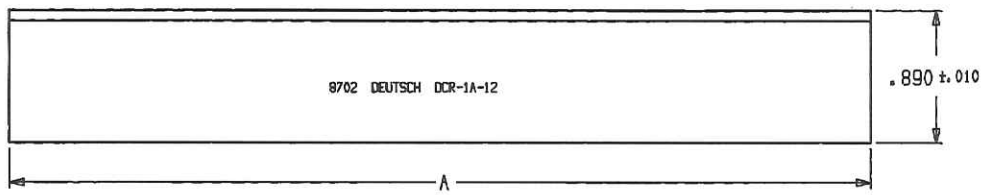

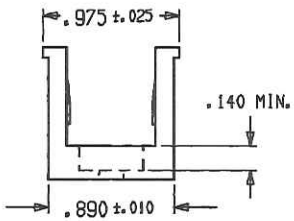

**	A ±.015	B ±.010	WEIGHT (gm.)	WEIGHT (oz.)
02	1.036	.518	5.30	.19
03	1.554	1.036	7.95	.28
04	2.072	1.554	10.60	.37
05	2.590	2.072	13.25	.47
06	3.108	2.590	15.90	.56
07	3.626	3.108	18.55	.65
08	4.144	3.626	21.20	.75
09	4.662	4.144	23.85	.84
10	5.180	4.662	26.50	.93
11	5.698	5.180	29.15	1.03
12	6.216	5.698	31.80	1.12
13	6.734	6.216	34.45	1.21
14	7.252	6.734	37.10	1.31
15	7.770	7.252	39.75	1.40
16	8.288	7.770	42.40	1.50

**	A ±.015	B ±.010	WEIGHT (gm.)	WEIGHT (oz.)
17	8.806	8.288	45.05	1.59
18	9.324	8.806	47.70	1.68
19	9.842	9.324	50.35	1.78
20	10.360	9.842	53.00	1.87

REV	
C	DCR-1*-**

5. MATERIAL: THERMOPLASTIC (C)

4. THE COMPOSITE RAIL MEETS OR EXCEEDS THE MECHANICAL AND ENVIRONMENTAL REQUIREMENTS OF MIL-T-81714.

3. OPERATING TEMPERATURE: -55°C TO +175°C. MAX. PULLOUT LOAD OF 10 LBS. AT +175°C.

2. RAIL PART NO. BREAKDOWN:
DCR-1 * - **
- ** — LENGTH
- * — FINISH: A = BLACK COMPOSITE
- DCR-1 — BASIC IDENTIFICATION

NOTE: 1. DIMENSIONS ARE IN INCHES UNLESS OTHERWISE SPECIFIED.

	SIGNATURE & DATE
DR	D. Oberle 9/30/87
CHK	L. STOLLE 12-14-87
PE	D. Oberle 9/30/87
APPD	121405
SCALE	WT

COMPOSITE RAIL

CTJ

ENVELOPE

CP | MATL CODE 16

DEUTSCH
ENGINEERED CONNECTING DEVICES
Municipal Airport
Banning, California

C | DCR-1*-**

DWG SIZE | CODE 11139 | SHEET 1 OF 1

DCR-1X-XXENV

7 6 5 4 3 2 1

E D C B A