THIS DRAWING IS UNPUBLISHED. RELEASED FOR PUBLICATION - , - .
© COPYRIGHT - By - ALL RIGHTS RESERVED.

LOC	DIST
AA	00

REVISIONS

P	LTR	DESCRIPTION	DATE	DWN	APVD
	B1	REVISED PER ECO-11-005033	23MAR11	RK	HMR

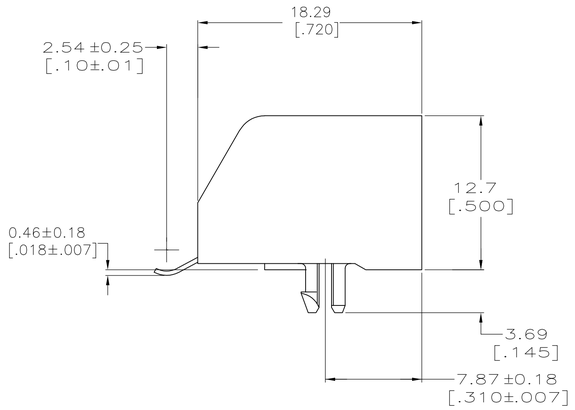

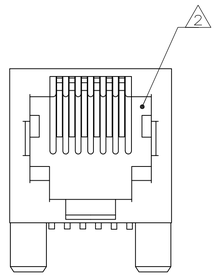

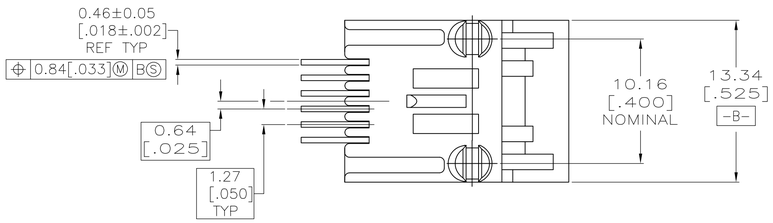

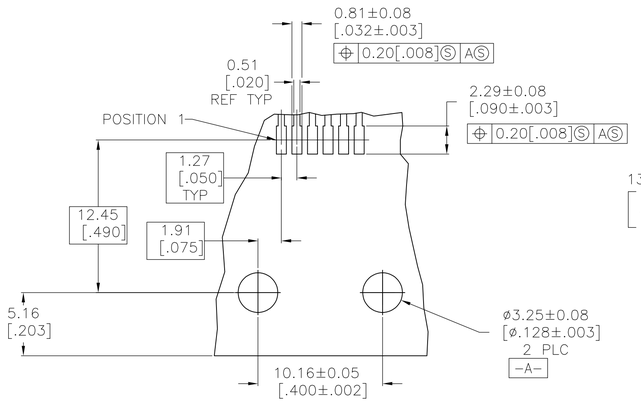

RECOMMENDED PRINTED CIRCUIT BOARD
COMPONENT SIDE

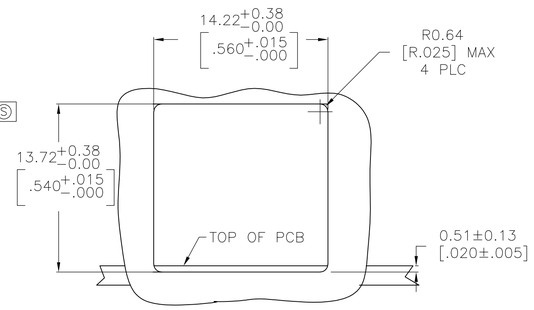

RECOMMENDED
PANEL CUTOUT

1. MATERIAL: HOUSING- HTN MOLDING COMPOUND, 94VO, COLOR: BLACK.
TERMINAL- 0.36 [.014] THICK PHOS BRONZE PLATED WITH 1.27µm [.000050] MIN THICK HARD GOLD IN LOCALIZED GOLD PLATE AREA AND 3.81µm [.000150] THICK MATTE TIN IN SOLDER AREA OVER 1.27µm [.000050] MIN THICK NICKEL UNDERPLATE.

2. CAVITY CONFORMS TO FCC RULES AND REGULATIONS PART 68, SUBPART F.

3. SNAP-IN RETENTION FEATURE ACCOMMODATES A 1.57±0.13 [.062±.005] PRINTED CIRCUIT BOARD.

4. DIMENSIONS ARE MAXIMUM UNLESS OTHERWISE SPECIFIED AND ARE PRIOR TO SURFACE MOUNT PROCESSING.

5. TERMINALS SHALL BE ASSEMBLED IN CENTER POSITIONS FOR -2.

6. - 2 PACKAGED 42 ASSEMBLIES PER TUBE.

4 (5)	(6) 5557314-2
6	5557314-1 (SHOWN)
TERMINALS REQUIRED	PART NO

THIS DRAWING IS A CONTROLLED DOCUMENT.

DIMENSIONS: mm [INCHES]

TOLERANCES UNLESS OTHERWISE SPECIFIED:
0 PLC ± -
1 PLC ± -
2 PLC ± -
3 PLC ± -
4 PLC ± -
ANGLES ± -

MATERIAL: SEE NOTE 1
FINISH: SEE NOTE 1

DWN L.A.MAYER 27AUG2007
CHK P.RECCE 27AUG2007
APVD S.FLICKINGER 27AUG2007
PRODUCT SPEC 108-1163
APPLICATION SPEC 114-8040
WEIGHT -

TE Connectivity

NAME: MODULAR JACK ASSEMBLY, 6 POSITION, LOW PROFILE, RIGHT ANGLE, SURFACE MOUNT

SIZE	CAGE CODE	DRAWING NO	RESTRICTED TO
A1	00779	C-5557314	-

CUSTOMER DRAWING | SCALE 4:1 | SHEET 1 OF 1 | REV B1