REV.	N° DCR	NATURE DE LA MODIFICATION	DATE	VISA

SYSTEM CONFIDENTIAL

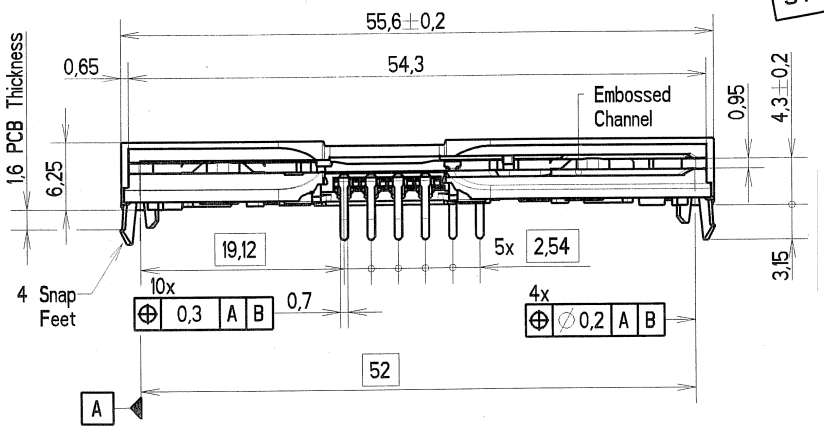

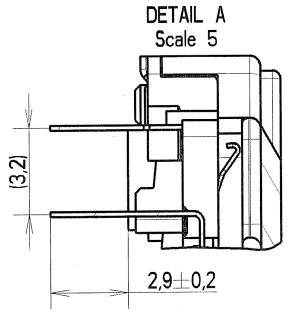

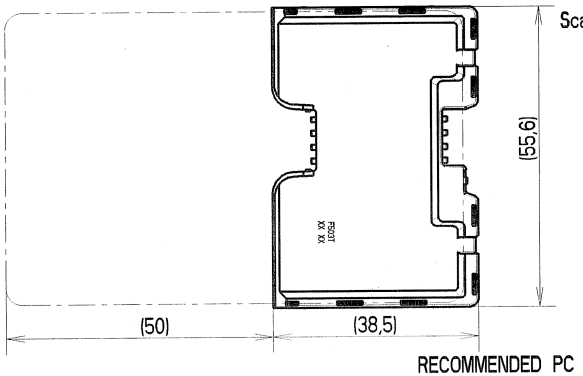

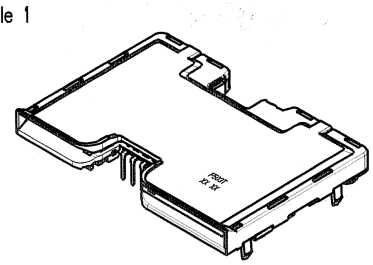

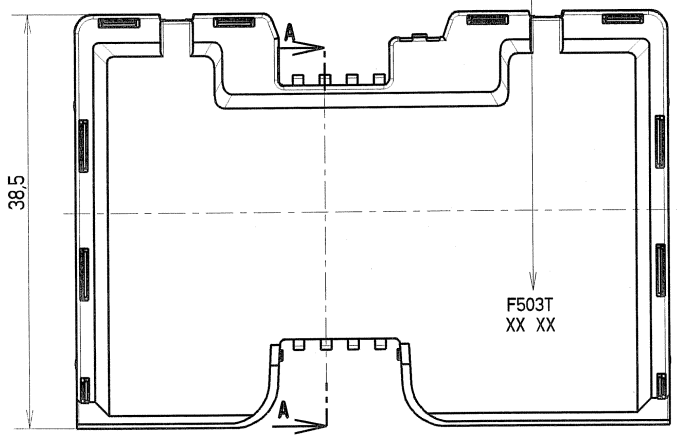

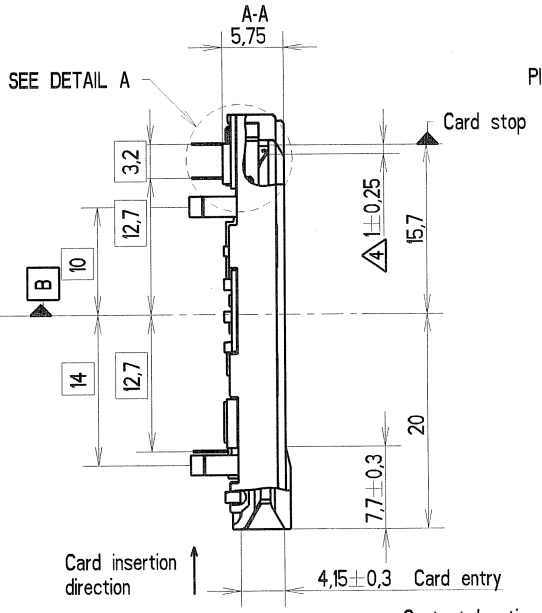

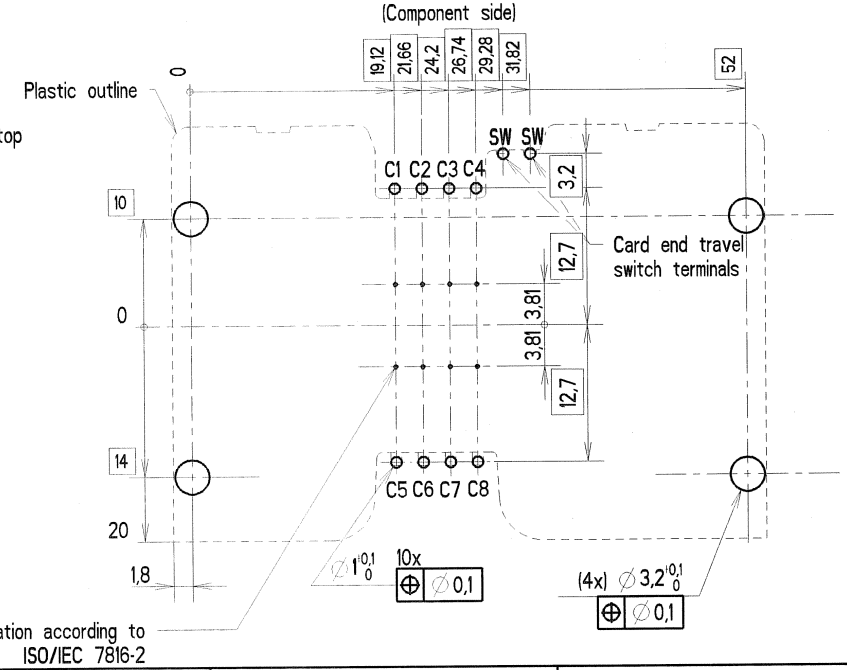

Notes :
- 1 - Termination to PCB : Thru hole tails. Temperature/time profile according to : C&K PS-LF-002 specification.
- 2 - 2,5 microns min tin plating on contact terminal areas and 0,1 microns min gold plating on switch terminal areas.
- 3 - Contacts forces :
  - max 0,5 N per contact with max. card thickness.
  - min 0,2 N per contact with min. card thickness.
- 4 - Card end travel switch NO activates when the sliding card is 1 mm from the card stop.
- 5 - For packaging on tray, see document : cu 030278Y0041.
- 6 - In case of customer accessories integration requesting an interface with CCM, please ask C&K for a 3D model.

MATIERE	TRAITEMENT	PROTECTION
SAUF INDIQUE : -COTES DONNEES AVANT PROTECTION -BAVURES ET ARETES VIVES SUPPRIMEES	TOL. LINEAIRE ± 0,1 / TOL. ANGULAIRE ± 2° / ETAT DE SURFACE Ra	DIMENSIONS CRITIQUES / DIMENSIONS SPC
DESSINE L.BOUVIER	DATE 28-11-08	ANALYSE Y / TAB. FAM. Y / PRO/E Y / LANGAGE E
VERIFIE G.PINON	DATE 02/12/2008	
APPROUVE L.KUBAT	DATE 02/12/2008	REMPLACE
C&K Components	PROJECTION 1-ER DIEDRE / ECHELLE 2	DESIGNATION CCM02-F503LFT Sliding version 4 clips for 1,6 mm PCB
BP 359 - 39105 Dole - FRANCE -	TAILLE A3 / FEUILLE 1 / 1	NUMERO CU 1122M1YF503 / REV

CE PLAN EST LA PROPRIETE DE C&K COMPONENTS SAS ET NE PEUT ETRE REPRODUIT OU COMMUNIQUE SANS SON AUTORISATION