THIS DRAWING IS UNPUBLISHED. RELEASED FOR PUBLICATION 20
© COPYRIGHT 20 BY TYCO ELECTRONICS CORPORATION. ALL RIGHTS RESERVED.

SET UP GAGE 458637-3

| LOC | DIST |
|---|---|
| A | 66 |

REVISIONS

| P | LTR | DESCRIPTION | DATE | DWN | APVD |
|---|---|---|---|---|---|
| | A | SEE ECO-05-002756 | 23MAY2005 | LJL | FB |

| PART NUMBER | REV | TERMINATOR | FEED TYPE | DESCRIPTION |
|---|---|---|---|---|
| 1528533-1 | A | LEADMAKER | MECH POST FEED | CUTS CARRIER |
| 1528533-2 | A | BENCH | MECH PRE FEED | CUTS CARRIER |
| 1528533-6 | A | LEADMAKER | MECH POST FEED | CONTINUOUS CARRIER |
| 7-1528533-1 | A | LEADMAKER | MECH POST FEED | -1 AND SPARE PARTS |
| 7-1528533-2 | A | BENCH | MECH PRE FEED | -2 AND SPARE PARTS |
| 7-1528533-6 | A | LEADMAKER | MECH POST FEED | -6 AND SPARE PARTS |
| 7-1528533-7 | A | - | - | SPARE PARTS KIT |

| CRIMP DATA | TYCO TERMINAL | | TYCO CRIMP SPEC |
|---|---|---|---|
| TERMINAL NAME: STANDARD TANDEM SPRING RECEPTACLE | | | |
| CRIMP | SIZE | TYPE | RANGE |
| WIRE | 0.84 [.033 IN] | F | 32 - 28 AWG |
| INSUL | 1.27 [.050 IN] | O | 0.51-1.02 [.020-.040 IN] |
| WIRE STRIP LENGTH 3.18-3.96mm [.125-.156 IN] | | | APPL INSTRUCTIONS 408-8322 & 408-8490 |
| TERMINAL 114-25021 - APPL SPEC - - | | | FEED 7.62 [.300 IN] |

TERMINALS APPLIED

| | | | |
|---|---|---|---|
| 167041 | - | - | - |
| - | - | - | - |
| - | - | - | - |
| - | - | - | - |
| - | - | - | - |

| WIRE SIZE | CRIMP HEIGHT * | REF SETTING * |
|---|---|---|
| 28 AWG | 0.53 ±0.03 [.021 ±.001 IN] | B 8 |
| 32 or 30 AWG | 0.51 ±0.03 [.020 ±.001 IN] | C 0 |
| - | - | |
| - | - | |
| - | - | |
| - | - | |
| - | - | |
| - | - | |
| - | - | |
| - | - | |
| - | - | |
| - | - | |

1. RECOMMENDED SPARE PARTS
2. GREASE RAM, CAM, CAM FOLLOWER AND FEED ROD LIGHTLY
3. LUBRICATE DAILY PER THE APPLICATOR INSTRUCTION SHEET SUPPLIED WITH THE APPLICATOR

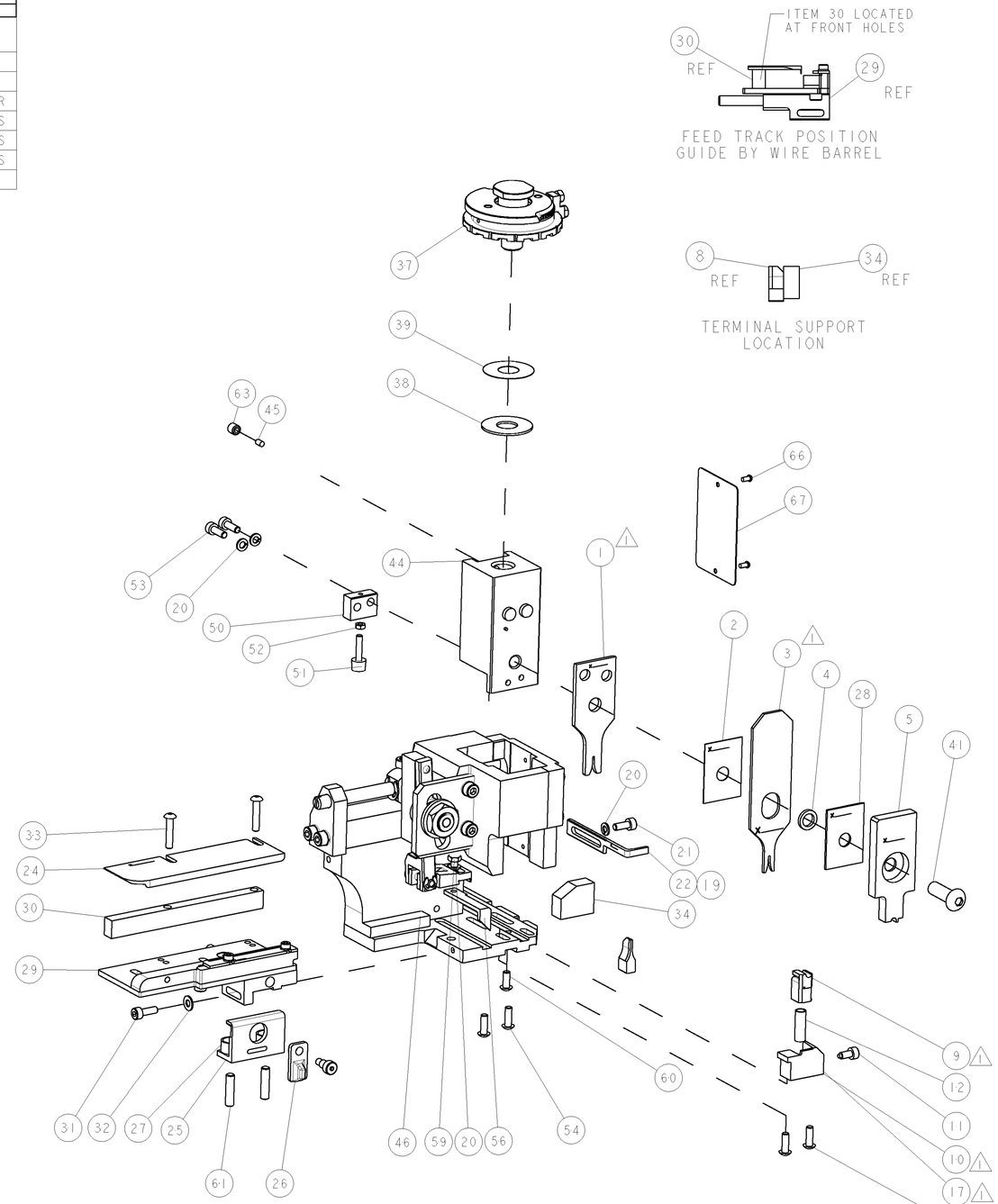


* WARNING
ON INSTALLATION, SET WIRE DISC TO LARGEST WIRE SIZE SETTING. USE OF SETTINGS BELOW MIN. REQUIRED CRIMP HEIGHT SETTING WILL CAUSE DAMAGE TO CRIMP TOOLING.

| | | | | | | | | | ITEM NO |
|---|---|---|---|---|---|---|---|---|---|
| - | - | - | - | - | - | - | - | - | 73 |
| - | - | - | - | - | - | - | - | - | 72 |
| - | 1 | 1 | 1 | 1 | 1 | 1 | 1338705-3 | DOCUMENTATION PACKAGE | 71 |
| - | - | - | - | - | - | - | - | - | 70 |
| - | - | - | - | - | - | - | - | - | 69 |
| - | - | - | - | - | - | - | - | - | 68 |
| - | 1 | 1 | 1 | 1 | 1 | 1 | 461264-5 | PLATE, IDENTIFICATION | 67 |
| - | 2 | 2 | 2 | 2 | 2 | 2 | 21017-2 | SCREW, DRIVE | 66 |
| - | - | - | - | - | - | - | - | - | 65 |
| - | - | - | - | - | - | - | - | - | 64 |
| - | 1 | 1 | 1 | 1 | 1 | 1 | 3-18031-0 | SCR, SET, CUP POINT M6 X 6.0 | 63 |
| - | - | - | - | - | - | - | - | - | 62 |
| - | 2 | 2 | 2 | 2 | 2 | 2 | 2-18032-5 | SCR, SET, FLT POINT M5 X 20.0 | 61 |
| - | 1 | 1 | 1 | 1 | 1 | 1 | 18024-7 | SCR, BTN SKT HD CAP (M4 X 10.0) | 60 |
| - | 1 | 1 | 1 | 1 | 1 | 1 | 5-18022-2 | SCR, HEX HD CAP M4 X 8.0 | 59 |
| - | - | - | - | - | - | - | - | - | 58 |
| - | - | - | - | - | - | - | - | - | 57 |
| - | 1 | 1 | 1 | 1 | 1 | 1 | 1338685-1 | PAWL, FEED | 56 |
| - | - | - | - | - | - | - | - | - | 55 |
| - | 4 | 4 | 4 | 4 | 4 | 4 | 18024-8 | SCR, BTN SKT HD CAP (M4 X 12.0) | 54 |
| - | 2 | 2 | 2 | 2 | 2 | 2 | 1-18023-2 | SCR, SKT HD CAP M4 X 12.0 | 53 |
| - | 1 | 1 | 1 | 1 | 1 | 1 | 18030-1 | NUT, HEX, REG M3 | 52 |
| - | 1 | 1 | 1 | 1 | 1 | 1 | 811242-5 | BUMPER, HOLD DOWN | 51 |
| - | 1 | 1 | 1 | 1 | 1 | 1 | 690753-2 | SPACER, TONKER | 50 |
| - | 1 | 1 | 1 | 1 | 1 | 1 | 18024-3 | SCR, BTN SKT HD CAP (M3 X 10.0) | 49 |
| - | - | 1 | - | - | 1 | - | 1338675-1 | CAM, UNIVERSAL PRE FEED | 48 |
| - | 1 | - | 1 | 1 | - | 1 | 1338676-1 | CAM, UNIVERSAL POST-FEED | 47 |
| - | 1 | 1 | 1 | 1 | 1 | 1 | 1320999-3 | APPLICATOR SUBASSEMBLY, HDI | 46 |
| - | 1 | 1 | 1 | 1 | 1 | 1 | 690191-1 | PLUG,NYLON | 45 |
| - | 1 | 1 | 1 | 1 | 1 | 1 | 1338660-1 | RAM | 44 |
| - | - | - | - | - | - | - | - | - | 43 |
| - | - | - | - | - | - | - | - | - | 42 |
| - | 1 | 1 | 1 | 1 | 1 | 1 | 2-18024-6 | SCR, BTN SKT HD CAP (M8 X 25.0) | 41 |
| - | - | - | - | - | - | - | - | - | 40 |
| - | 1 | 1 | 1 | 1 | 1 | 1 | 690125-1 | SHIM SUB-ASSY | 39 |
| - | 1 | 1 | 1 | 1 | 1 | 1 | 1-469367-1 | SHIM | 38 |
| - | 1 | 1 | 1 | 1 | 1 | 1 | 879103-3 | DISC, ADJUSTABLE GEITNER | 37 |
| - | - | - | - | - | - | - | - | - | 36 |
| - | - | - | - | - | - | - | - | - | 35 |
| - | 1 | 1 | 1 | 1 | 1 | 1 | 1320934-1 | SUPPORT, TERMINAL | 34 |
| - | 2 | 2 | 2 | 2 | 2 | 2 | 1-18024-0 | SCR, BTN SKT HD CAP (M4 X 20.0) | 33 |
| - | 1 | 1 | 1 | 1 | 1 | 1 | 18027-2 | WASHER, FLAT, REG M4 | 32 |
| - | 1 | 1 | 1 | 1 | 1 | 1 | 1-18023-2 | SCR, SKT HD CAP M4 X 12.0 | 31 |
| - | 1 | 1 | 1 | 1 | 1 | 1 | 1320908-9 | SPACER, STRIP GUIDE | 30 |
| - | 1 | 1 | 1 | 1 | 1 | 1 | 1633073-1 | STRIP GUIDE ASSEMBLY | 29 |
| - | 1 | 1 | 1 | 1 | 1 | 1 | 1-455888-0 | SPACER, CRIMPER | 28 |
| - | 2 | 2 | 2 | 2 | 2 | 2 | 1-22284-0 | SPRING, COMPRESSION | 27 |
| - | 1 | 1 | 1 | 1 | 1 | 1 | 356835-1 | LEVER, DRAG RELEASE | 26 |
| - | 1 | 1 | 1 | 1 | 1 | 1 | 240792-1 | DRAG, TERMINAL | 25 |
| - | 1 | 1 | 1 | 1 | 1 | 1 | 1320928-1 | PLATE, STRIP GUIDE | 24 |
| - | 1 | 1 | 1 | 1 | 1 | 1 | 980371-4 | SCR, SKT HD SHLDR 5.0 DIA X 6.0 | 23 |
| - | 1 | - | 1 | 1 | - | 1 | 690472-2 | STRIPPER | 22 |
| - | 1 | 1 | 1 | 1 | 1 | 1 | 1-18023-1 | SCR, SKT HD CAP M4 X 10.0 | 21 |
| - | 4 | 4 | 4 | 4 | 4 | 4 | 18025-2 | WASHER, SPRG LOCK, REG M4 | 20 |
| - | - | 1 | - | - | 1 | - | 690472-1 | STRIPPER | 19 |
| - | - | - | - | - | - | - | - | - | 18 |
| 1 | - | 1 | - | - | 1 | - | 1338684-1 | HOLDER, SHEAR, NO-CUT | 17 |
| - | - | - | - | - | - | - | - | - | 16 |
| - | - | - | - | - | - | - | - | - | 15 |
| - | - | - | - | - | - | - | - | - | 14 |
| - | - | - | - | - | - | - | - | - | 13 |
| - | 1 | 1 | 1 | 1 | 1 | 1 | 5-22280-0 | SPRING, COMPRESSION | 12 |
| - | 1 | 1 | 1 | 1 | 1 | 1 | 356885-4 | STOP, SHEAR | 11 |
| 1 | - | - | 1 | - | 1 | 1 | 1320921-1 | SHEAR HOLDER, FRONT, CUT | 10 |
| 1 | - | 1 | 1 | 1 | 1 | 1 | 462006-7 | FLOATING SHEAR, FRONT | 9 |
| 1 | 1 | 2 | 2 | 2 | 1 | 1 | 1633139-2 | ANVIL, COMBINATION | 8 |
| - | - | - | - | - | - | - | - | - | 7 |
| - | - | - | - | - | - | - | - | - | 6 |
| - | 1 | 1 | 1 | 1 | 1 | 1 | 2-455889-0 | DEPRESSOR, SHEAR | 5 |
| - | 1 | 1 | 1 | 1 | 1 | 1 | 238011-7 | BLOCK, CRIMPER SPACER | 4 |
| 1 | 1 | 2 | 2 | 2 | 1 | 1 | 3-1583690-2 | CRIMPER, INSUL O | 3 |
| - | 1 | 1 | 1 | 1 | 1 | 1 | 455888-3 | SPACER, CRIMPER | 2 |
| 1 | 1 | 2 | 2 | 2 | 1 | 1 | 1-456400-0 | CRIMPER, WIRE PREMIUM | 1 |
| -77 | -76 | -72 | -71 | -6 | -2 | -1 | PART NO | DESCRIPTION | ITEM NO |

VIEW B ROTATED 180°

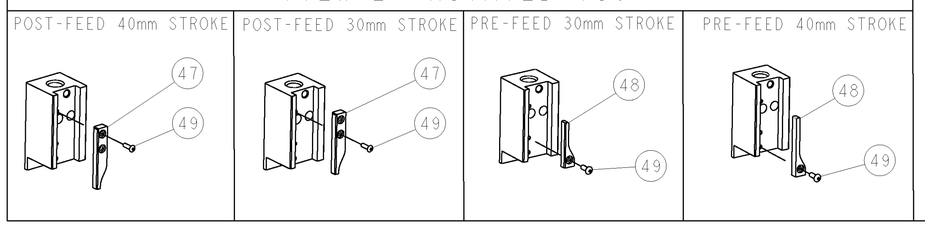


| | | | | | | | | | ITEM NO |
|---|---|---|---|---|---|---|---|---|---|
| - | - | - | - | - | - | - | - | - | 84 |
| - | - | - | - | - | - | - | - | - | 83 |
| - | - | - | - | - | - | - | - | - | 82 |
| - | - | - | - | - | - | - | - | - | 81 |
| - | - | - | - | - | - | - | - | - | 80 |
| - | - | - | - | - | - | - | - | - | 79 |
| - | - | - | - | - | - | - | - | - | 78 |
| - | - | - | - | - | - | - | - | - | 77 |
| - | - | - | - | - | - | - | - | - | 76 |
| - | - | - | - | - | - | - | - | - | 75 |
| - | - | - | - | - | - | - | - | - | 74 |
| -77 | -76 | -72 | -71 | -6 | -2 | -1 | PART NO | DESCRIPTION | ITEM NO |

THIS DRAWING IS A CONTROLLED DOCUMENT FOR TYCO ELECTRONICS CORPORATION. IT IS SUBJECT TO CHANGE AND THE CONTROLLING ENGINEERING ORGANIZATION SHOULD BE CONTACTED FOR THE LATEST REVISION.

DIMENSIONS: mm [IN]

TOLERANCES UNLESS OTHERWISE SPECIFIED:
0 PLC ±-
1 PLC ±-
2 PLC ±-
3 PLC ±-
4 PLC ±-
ANGLES ±-

MATERIAL - -
FINISH - -

DWN 21APR2005 L LOFTHOUSE
CHK -
APVD 21APR2005 F.BACKHURST
PRODUCT SPEC -
APPLICATION SPEC See Table
WEIGHT -

tyco Electronics
Tyco Electronics
Harrisburg, PA 17105-3608

NAME FINE ADJUST SIDE FEED HDI APPLICATOR

SIZE A1 | CAGE CODE 00779 | DRAWING NO C-1528533 | RESTRICTED TO -

CUSTOMER DRAWING | SCALE 3:5 | SHEET 1 OF 1 | REV A

AMP 4805 REV 31MAR2000

Pro/ENGINEER DRAWING