REV.	DATE	DESCRIPTION
A	04/03/05	UPDATE DRAWING FORMAT

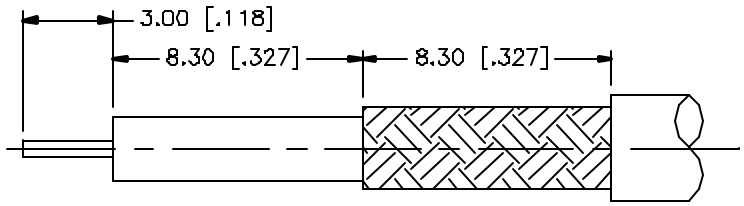

RECOMMENDED
CABLE STRIPPING DIM'S

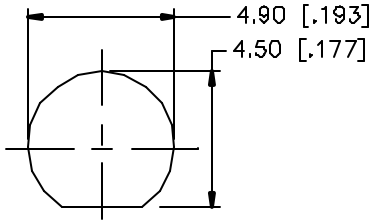

RECOMMENDED
MOUNTING HOLE

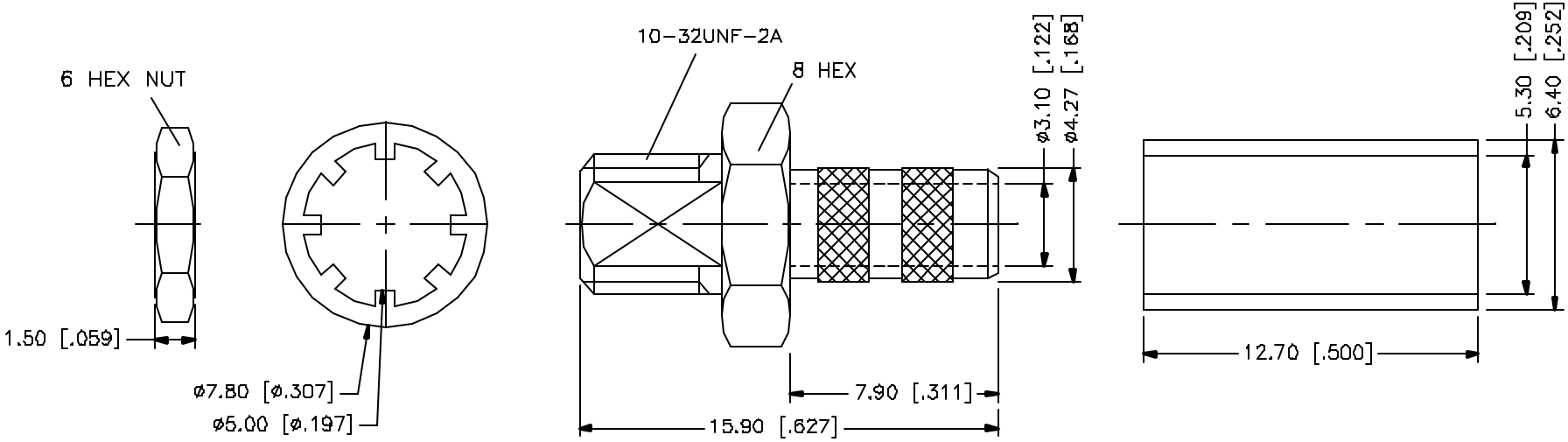

CRIMP NOTES:

1. CRIMPED FERRULE
   HEX CRIMP SIZE .213"

	DESCRIPTION	MATERIAL	FINISH	QTY
8				
7				
6				
5				
4	FERRULE	COPPER	NICKEL	1
3	HEX NUT	BRASS	NICKEL	1
2	LOCK WASHER	BRASS	NICKEL	1
1	BODY	BRASS	NICKEL	1

UNLESS OTHERWISE SPECIFIED DIMENSIONS ARE IN MILLIMETERS. DIMENSIONS IN [ ] ARE IN INCHES AND FOR CUSTOMER REFERENCE ONLY.

UNLESS OTHERWISE SPECIFIED TOLERANCES FOR MILLIMETERS ARE:
0.5 – 8mm ± 0.20mm
8 – 30mm ± 0.40mm
30 – 120mm ± 0.50mm

UNLESS OTHERWISE SPECIFIED TOLERANCES FOR INCHES ARE:
.020 – .315 = ± 0.007"
.315 – 1.180 = ± 0.015"
1.180 – 4.724 = ± 0.020"

DO NOT SCALE DRAWING

APPROVALS		DATE
DRAWN	C.R.S.	04/03/05
CHECKED		
ISSUED		
SHEET	1 OF 1	

CAD FILE C:/142/2142271.DWG

Amphenol Connex

PART DESCRIPTION
BULKHEAD CABLE TERMINATION
(FOR RG-58C/U, 58/U CABLE)

PART NO. 142271

DWG. NO.	REV.	SIZE	SCALE
142271	A	A	NA