CKT. SIZE	DIM. A REF. (MM)	DIM. A REF. INCH	DIM. B REF. (MM)	DIM. B REF. INCH
4	(5.08)	.200	(2.54)	.100
6	(7.62)	.300	(5.08)	.200
8	(10.16)	.400	(7.62)	.300
10	(12.70)	.500	(10.16)	.400
12	(15.24)	.600	(12.70)	.500
14	(17.78)	.700	(15.24)	.600
16	(20.32)	.800	(17.78)	.700
18	(22.86)	.900	(20.32)	.800
20	(25.40)	1.000	(22.86)	.900
22	(27.94)	1.100	(25.40)	1.000
24	(30.48)	1.200	(27.94)	1.100
26	(33.02)	1.300	(30.48)	1.200
28	(35.56)	1.400	(33.02)	1.300
30	(38.10)	1.500	(35.56)	1.400
32	(40.64)	1.600	(38.10)	1.500
34	(43.18)	1.700	(40.64)	1.600
36	(45.72)	1.800	(43.18)	1.700
38	(48.26)	1.900	(45.72)	1.800
40	(50.80)	2.000	(48.26)	1.900
42	(53.34)	2.100	(50.80)	2.000
44	(55.88)	2.200	(53.34)	2.100
46	(58.42)	2.300	(55.88)	2.200
48	(60.96)	2.400	(58.42)	2.300
50	(63.50)	2.500	(60.96)	2.400
52	(66.04)	2.600	(63.50)	2.500
54	(68.58)	2.700	(66.04)	2.600
56	(71.12)	2.800	(68.58)	2.700
58	(73.66)	2.900	(71.12)	2.800
60	(76.20)	3.000	(73.66)	2.900
62	(78.74)	3.100	(76.20)	3.000
64	(81.28)	3.200	(78.74)	3.100
66	(83.82)	3.300	(81.28)	3.200
68	(86.36)	3.400	(83.82)	3.300
70	(88.90)	3.500	(86.36)	3.400
72	(91.44)	3.600	(88.90)	3.500
74	(93.98)	3.700	(91.44)	3.600
76	(96.52)	3.800	(93.98)	3.700
78	(99.06)	3.900	(96.52)	3.800
80	(101.06)	4.000	(99.06)	3.900
82	(104.14)	4.100	(101.06)	4.000
84	(106.68)	4.200	(104.14)	4.100
86	(109.22)	4.300	(106.68)	4.200
88	(111.76)	4.400	(109.22)	4.300
90	(114.30)	4.500	(111.76)	4.400
92	(116.84)	4.600	(114.30)	4.500
94	(119.38)	4.700	(116.84)	4.600
96	(121.92)	4.800	(119.38)	4.700
98	(124.46)	4.900	(121.92)	4.800
100	(127.00)	5.000	(124.46)	4.900

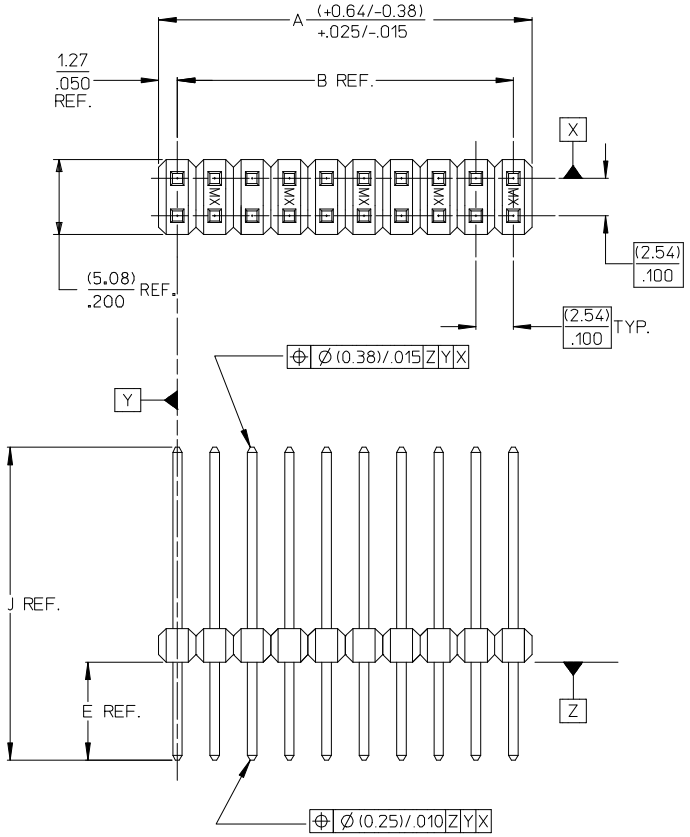

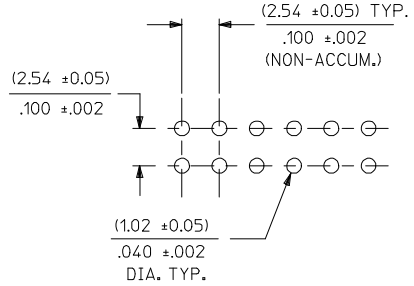

RECOMMENDED P.C. BOARD HOLE LAYOUT

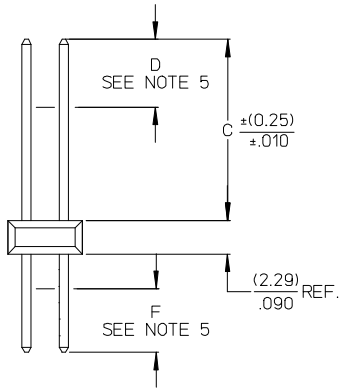

NOTES:

1. MATERIAL:
   PIN: COPPER ALLOY
   WAFER: GLASS FILLED LCP (LIQUID CRYSTAL POLYMER, UL 94V-0, COLOR: BLACK.
2. FINISH:

   TIN = (0.00380)/.000150 MINIMUM TIN PLATE OVER (0.00127)/.000050 MINIMUM NICKEL PLATE.
   15 GOLD = (0.00038)/.000015 MINIMUM GOLD PLATE IN SELECT AREA, (0.00190)/.000075 MINIMUM TIN PLATE IN SELECT AREA, OVER (0.00127)/.000050 MINIMUM NICKEL PLATE OVERALL.
   30 GOLD = (0.00076)/.000030 MINIMUM GOLD PLATE IN SELECT AREA, (0.00190)/.000075 MINIMUM TIN PLATE IN SELECT AREA, OVER (0.00127)/.000050 MINIMUM NICKEL PLATE OVERALL.
   GT15 = (0.00038)/.000015 MINIMUM GOLD PLATE IN SELECT AREA, (0.00254)/.000100 MINIMUM TIN PLATE IN SELECT AREA, OVER (0.00127)/.000050 MINIMUM NICKEL PLATE OVERALL.

3. PRODUCT SPECIFICATION NONE
4. PACKAGING INFORMATION: (UNLESS OTHERWISE NOTED IN TABLES) BULK PACK PER PK-70873-0353.
5. MEASURE POINT FOR PLATING THICKNESS.
6. FOR ASSEMBLIES WITH VOIDED PINS, REFER TO DRAWING NO. SDA-70280-5001-9999.
7. PIN PUSHOUT FORCE 3 POUNDS MINIMUM IN EITHER DIRECTION.
8. FOR ILLUSTRATION PURPOSES, 20 (DUAL 10) CIRCUIT SIZE IS SHOWN.
9. PINS MEET SOLDERABILITY SPEC SMES-152. ABSENCE OF PLATING PERMISSIBLE AT BANDOLIER PIN FAYING SURFACE. (APPROXIMATELY (0.64)/.025 INCH LONG BY (0.15)/.006 INCH WIDE AT 2 LOCATIONS)
10. PARTS CONFORM TO CLASS B OF COSMETIC SPECIFICATION PS-45499-002

* THE PRIMARY SHIPPING CARTON WILL BE LABELED "COMPLIANT TO RoHS DIRECTIVE 2002/95/EC AND ELV ANNEX II OF DIRECTIVE 2000/53/EC". CARTONS WITHOUT THIS LABEL MAY CONTAIN PRODUCT WITH LEAD PLATING.

SHT.	REV.
9	G6
8	G5
7	G3
6	G3
5	G3
4	G3
3	G3
2	G3
1	G6

ADD P/N 70280-1254
EC NO: UCP2008-2306 2008/03/31
DRWN: JBELL 2008/04/07
CH'KD: LSCHMIDT 2008/04/24
APPR: FSMITH
DESCRIPTION
REV G6

QUALITY SYMBOLS
▼=0
Ⓒ=0

GENERAL TOLERANCES (UNLESS SPECIFIED)

	mm	INCH
4 PLACES	± ---	± ---
3 PLACES	± ---	± .005
2 PLACES	± 0.13	± .01
1 PLACE	± 0.25	± ---
ANGULAR ±1/2°		

DRAFT WHERE APPLICABLE MUST REMAIN WITHIN DIMENSIONS

DIMENSION STYLE: MM/IN
SCALE: 4:1
DESIGN UNITS: INCH
THIRD ANGLE PROJECTION

DRAWN BY: SMR DATE: 04/19/1993
CHECKED BY: DATE:
APPROVED BY: SMR DATE: 04/19/1993

TITLE: SALES ASSY-HIGH TEMP. DUAL ROW WAFER W/BREAK-OFF OPT. .025 SQ PINS

MOLEX INCORPORATED

MATERIAL NO.: SEE TABLE
DOCUMENT NO.: SDA-70280-0001-4000
SHEET NO.: 1 OF 9
SIZE: C

THIS DRAWING CONTAINS INFORMATION THAT IS PROPRIETARY TO MOLEX INCORPORATED AND SHOULD NOT BE USED WITHOUT WRITTEN PERMISSION

ENGINEERING NUMBER A-70280-	RELEASE FOR MANUFACTURE	E REF.	J REF.	C ±(0.25) .010	CONNECTOR END PLATING TYPE	CONNECTOR END PLATING D MEAS.	P.C. BOARD END PLATING TYPE	P.C. BOARD END PLATING F MEAS.	FOR PACKAGING INFORMATION, SEE NOTE 4, SHEET 1 (UNLESS OTHERWISE SPECIFIED BELOW)
-0281/-0320	R.F.M.	(2.92) .115	(12.83) .505	(7.62) .300	TIN	(4.57) .180	TIN	(1.27) .050	PK-70873-0090
-0361/-0399	R.F.M.	(3.68) .145	(17.02) .670	(11.05) .435	TIN	(6.46) .254	TIN	(1.23) .048	PK-70873-0276
-0549/-0588	R.F.M.	(2.72) .107	(11.10) .437	(6.10) .240	TIN	(2.54) .100	TIN	(1.27) .050	PK-70873-0090
-0589/-0628	R.F.M.	(4.45) .175	(12.83) .505	(6.10) .240	TIN	(2.54) .100	TIN	(1.27) .050	

CKTS	EDP NUMBER	ENG NUMBER	EDP NUMBER	ENG NUMBER	EDP NUMBER	ENG NUMBER	EDP NUMBER	ENG NUMBER	EDP NUMBER	ENG NUMBER	EDP NUMBER	ENG NUMBER	EDP NUMBER	ENG NUMBER	CKTS
	N.A.	AX-70280-0281							N/A	A-70280-0549	N/A	A-70280-0589			
04	010-97-7047	A-70280-0282			70280-0361	A-70280-0361			70280-0550	A-70280-0550	70280-0590	A-70280-0590			04
06	010-97-7067	A-70280-0283			70280-0362	A-70280-0362			70280-0551	A-70280-0551	70280-0591	A-70280-0591			06
08	010-97-7087	A-70280-0284			70280-0363	A-70280-0363			70280-0552	A-70280-0552	70280-0592	A-70280-0592			08
10	010-97-7107	A-70280-0285			70280-0364	A-70280-0364			70280-0553	A-70280-0553	70280-0593	A-70280-0593			10
12	010-97-7127	A-70280-0286			70280-0365	A-70280-0365			70280-0554	A-70280-0554	70280-0594	A-70280-0594			12
14	010-97-7147	A-70280-0287			70280-0366	A-70280-0366			70280-0555	A-70280-0555	70280-0595	A-70280-0595			14
16	010-97-7167	A-70280-0288			70280-0367	A-70280-0367			70280-0556	A-70280-0556	70280-0596	A-70280-0596			16
18	010-97-7187	A-70280-0289			70280-0368	A-70280-0368			70280-0557	A-70280-0557	70280-0597	A-70280-0597			18
20	010-97-7207	A-70280-0290			70280-0369	A-70280-0369			70280-0558	A-70280-0558	70280-0598	A-70280-0598			20
22	010-97-7227	A-70280-0291			70280-0370	A-70280-0370			70280-0559	A-70280-0559	70280-0599	A-70280-0599			22
24	010-97-7247	A-70280-0292			70280-0371	A-70280-0371			70280-0560	A-70280-0560	70280-0600	A-70280-0600			24
26	010-97-7267	A-70280-0293			70280-0372	A-70280-0372			70280-0561	A-70280-0561	70280-0601	A-70280-0601			26
28	010-97-7287	A-70280-0294			70280-0373	A-70280-0373			70280-0562	A-70280-0562	70280-0602	A-70280-0602			28
30	010-97-7307	A-70280-0295			70280-0374	A-70280-0374			70280-0563	A-70280-0563	70280-0603	A-70280-0603			30
32	010-97-7327	A-70280-0296			70280-0375	A-70280-0375			70280-0564	A-70280-0564	70280-0604	A-70280-0604			32
34	010-97-7347	A-70280-0297			70280-0376	A-70280-0376			70280-0565	A-70280-0565	70280-0605	A-70280-0605			34
36	010-97-7367	A-70280-0298			70280-0377	A-70280-0377			70280-0566	A-70280-0566	70280-0606	A-70280-0606			36
38	010-97-7387	A-70280-0299			70280-0378	A-70280-0378			70280-0567	A-70280-0567	70280-0607	A-70280-0607			38
40	010-97-7407	A-70280-0300			70280-0379	A-70280-0379			70280-0568	A-70280-0568	70280-0608	A-70280-0608			40
42	010-97-7427	A-70280-0301			70280-0380	A-70280-0380			70280-0569	A-70280-0569	70280-0609	A-70280-0609			42
44	010-97-7447	A-70280-0302			70280-0381	A-70280-0381			70280-0570	A-70280-0570	70280-0610	A-70280-0610			44
46	010-97-7467	A-70280-0303			70280-0382	A-70280-0382			70280-0571	A-70280-0571	70280-0611	A-70280-0611			46
48	010-97-7487	A-70280-0304			70280-0383	A-70280-0383			70280-0572	A-70280-0572	70280-0612	A-70280-0612			48
50	010-97-7507	A-70280-0305			70280-0384	A-70280-0384			70280-0573	A-70280-0573	70280-0613	A-70280-0613			50
52	010-97-7527	A-70280-0306			70280-0385	A-70280-0385			70280-0574	A-70280-0574	70280-0614	A-70280-0614			52
54	010-97-7547	A-70280-0307			70280-0386	A-70280-0386			70280-0575	A-70280-0575	70280-0615	A-70280-0615			54
56	010-97-7567	A-70280-0308			70280-0387	A-70280-0387			70280-0576	A-70280-0576	70280-0616	A-70280-0616			56
58	010-97-7587	A-70280-0309			70280-0388	A-70280-0388			70280-0577	A-70280-0577	70280-0617	A-70280-0617			58
60	010-97-7607	A-70280-0310			70280-0389	A-70280-0389			70280-0578	A-70280-0578	70280-0618	A-70280-0618			60
62	010-97-7627	A-70280-0311			70280-0390	A-70280-0390			70280-0579	A-70280-0579	70280-0619	A-70280-0619			62
64	010-97-7647	A-70280-0312			70280-0391	A-70280-0391			70280-0580	A-70280-0580	70280-0620	A-70280-0620			64
66	010-97-7667	A-70280-0313			70280-0392	A-70280-0392			70280-0581	A-70280-0581	70280-0621	A-70280-0621			66
68	010-97-7687	A-70280-0314			70280-0393	A-70280-0393			70280-0582	A-70280-0582	70280-0622	A-70280-0622			68
70	010-97-7707	A-70280-0315			70280-0394	A-70280-0394			70280-0583	A-70280-0583	70280-0623	A-70280-0623			70
72	010-97-7727	A-70280-0316			70280-0395	A-70280-0395			70280-0584	A-70280-0584	70280-0624	A-70280-0624			72
74	010-97-7747	A-70280-0317			70280-0396	A-70280-0396			70280-0585	A-70280-0585	70280-0625	A-70280-0625			74
76	010-97-7767	A-70280-0318			70280-0397	A-70280-0397			70280-0586	A-70280-0586	70280-0626	A-70280-0626			76
78	010-97-7787	A-70280-0319			70280-0398	A-70280-0398			70280-0587	A-70280-0587	70280-0627	A-70280-0627			78
80	010-97-7807	A-70280-0320			70280-0399	A-70280-0399			70280-0588	A-70280-0588	70280-0628	A-70280-0628			80

UPDATE DIMENSIONS
EC NO: UCP2007-1440 2006/12/18
DRWN:PRIDDER 2006/12/18
CHKD:ADERR 2007/01/10
APPR:FSMITH
DESCRIPTION
REV
G3

QUALITY SYMBOLS
▼=0
Ⓒ=0

GENERAL TOLERANCES (UNLESS SPECIFIED)

	mm	INCH
4 PLACES	± ---	± ---
3 PLACES	± ---	± ---
2 PLACES	± ---	± ---
1 PLACE	± ---	± ---
ANGULAR ±1/2°		

DRAFT WHERE APPLICABLE MUST REMAIN WITHIN DIMENSIONS

DIMENSION STYLE: MM/IN
SCALE: ---
DESIGN UNITS: INCH
THIRD ANGLE PROJECTION

DRAWN BY: SMR DATE: 04/19/1993
CHECKED BY: DATE:
APPROVED BY: SMR DATE: 04/19/1993

TITLE: SALES ASSY-HIGH TEMP. DUAL ROW WAFER W/BREAK-OFF OPTION, .025 SQ PINS

molex MOLEX INCORPORATED

MATERIAL NO.: SEE CHART
DOCUMENT NO.: SDA-70280-0001-4000
SHEET NO.: 3 OF 8
SIZE: C

THIS DRAWING CONTAINS INFORMATION THAT IS PROPRIETARY TO MOLEX INCORPORATED AND SHOULD NOT BE USED WITHOUT WRITTEN PERMISSION