- **State-of-the-Art Advanced BiCMOS Technology (ABT) Design for 3.3-V Operation and Low Static Power Dissipation**
- **Support Mixed-Mode Signal Operation (5-V Input and Output Voltages With 3.3-V V_{CC})**
- **Support Unregulated Battery Operation Down to 2.7 V**
- **Typical V_{OLP} (Output Ground Bounce) < 0.8 V at V_{CC} = 3.3 V, T_A = 25°C**
- **ESD Protection Exceeds 2000 V Per MIL-STD-883C, Method 3015; Exceeds 200 V Using Machine Model (C = 200 pF, R = 0)**
- **Latch-Up Performance Exceeds 500 mA Per JEDEC Standard JESD-17**
- **Bus-Hold Data Inputs Eliminate the Need for External Pullup Resistors**
- **Supports Live Insertion**
- **Package Options Include Plastic Small-Outline (DW), Shrink Small-Outline (DB), and Thin Shrink Small-Outline (PW) Packages, Ceramic Chip Carriers (FK), Ceramic Flatpacks (W), and Ceramic DIPS (J)**

SN54LVT244 . . . J OR W PACKAGE
SN74LVT244 . . . DB, DW, OR PW PACKAGE
(TOP VIEW)

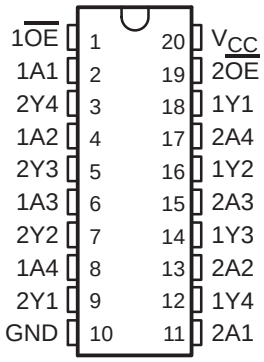

SN54LVT244 . . . FK PACKAGE
(TOP VIEW)

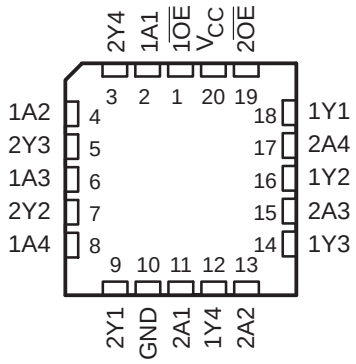

description

These octal buffers and line drivers are designed specifically for low-voltage (3.3-V) V_{CC} operation, but with the capability to provide a TTL interface to a 5-V system environment.

The ’LVT244 is organized as two 4-bit line drivers with separate output-enable ($\overline{OE}$) inputs. When $\overline{OE}$ is low, the device passes data from the A inputs to the Y outputs. When $\overline{OE}$ is high, the outputs are in the high-impedance state.

Active bus-hold circuitry is provided to hold unused or floating data inputs at a valid logic level.

To ensure the high-impedance state during power up or power down, $\overline{OE}$ should be tied to V_{CC} through a pullup resistor; the minimum value of the resistor is determined by the current-sinking capability of the driver.

The SN74LVT244 is packaged in TI’s shrink small-outline package (DB), which provides the same I/O pin count and functionality of standard small-outline packages in less than half the printed-circuit-board area.

The SN54LVT244 is characterized for operation over the full military temperature range of –55°C to 125°C. The SN74LVT244 is characterized for operation from –40°C to 85°C.

FUNCTION TABLE
(each buffer)

INPUTS		OUTPUT
$\overline{OE}$	A	Y
L	H	H
L	L	L
H	X	Z

PRODUCTION DATA information is current as of publication date. Products conform to specifications per the terms of Texas Instruments standard warranty. Production processing does not necessarily include testing of all parameters.

Copyright © 1994, Texas Instruments Incorporated

logic symbol†

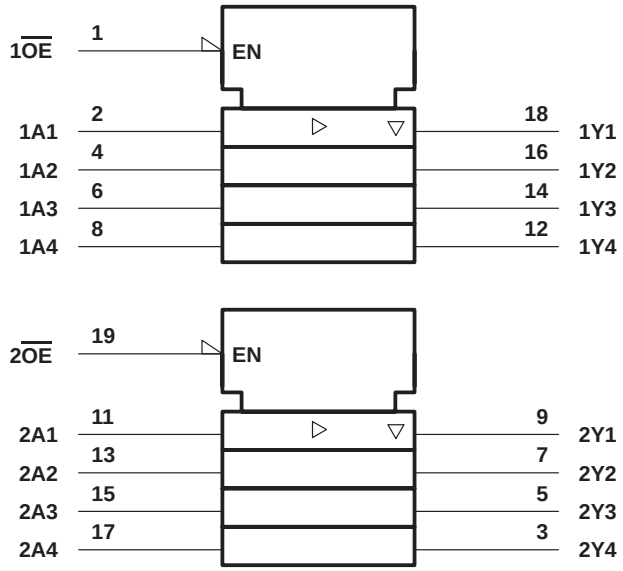

† This symbol is in accordance with ANSI/IEEE Std 91-1984 and IEC Publication 617-12.

logic diagram (positive logic)

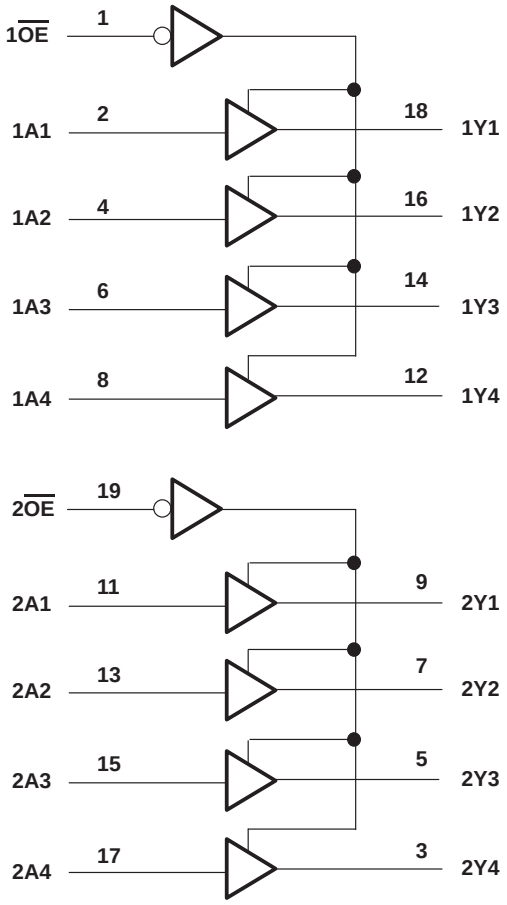

absolute maximum ratings over operating free-air temperature range (unless otherwise noted)‡

Supply voltage range, V_{CC}	–0.5 V to 4.6 V
Input voltage range, V_I (see Note 1)	–0.5 V to 7 V
Voltage range applied to any output in the high state or power-off state, V_O (see Note 1)	–0.5 V to 7 V
Current into any output in the low state, I_O: SN54LVT244	96 mA
SN74LVT244	128 mA
Current into any output in the high state, I_O (see Note 2): SN54LVT244	48 mA
SN74LVT244	64 mA
Input clamp current, I_{IK} ($V_I < 0$)	–50 mA
Output clamp current, I_{OK} ($V_O < 0$)	–50 mA
Maximum power dissipation at T_A = 55°C (in still air) (see Note 3): DB package	0.6 W
DW package	1.6 W
PW package	0.7 W
Storage temperature range	–65°C to 150°C

‡ Stresses beyond those listed under “absolute maximum ratings” may cause permanent damage to the device. These are stress ratings only and functional operation of the device at these or any other conditions beyond those indicated under “recommended operating conditions” is not implied. Exposure to absolute-maximum-rated conditions for extended periods may affect device reliability.

NOTES:
1. The input and output negative-voltage ratings may be exceeded if the input and output clamp-current ratings are observed.
2. This current will only flow when the output is in the high state and $V_O > V_{CC}$.
3. The maximum package power dissipation is calculated using a junction temperature of 150°C and a board trace length of 750 mils. For more information, refer to the *Package Thermal Considerations* application note.

recommended operating conditions (see Note 4)

			SN54LVT244		SN74LVT244		UNIT
			MIN	MAX	MIN	MAX	
V_{CC}	Supply voltage		2.7	3.6	2.7	3.6	V
V_{IH}	High-level input voltage		2		2		V
V_{IL}	Low-level input voltage			0.8		0.8	V
V_I	Input voltage			5.5		5.5	V
I_{OH}	High-level output current			–24		–32	mA
I_{OL}	Low-level output current			48		64	mA
$\Delta t/\Delta v$	Input transition rise or fall rate	Outputs enabled		10		10	ns/V
T_A	Operating free-air temperature		–55	125	–40	85	°C

NOTE 4: Unused or floating control inputs must be held high or low.

electrical characteristics over recommended operating free-air temperature range (unless otherwise noted)

PARAMETER	TEST CONDITIONS			SN54LVT244			SN74LVT244			UNIT
				MIN	TYP†	MAX	MIN	TYP†	MAX	
V_{IK}	V_{CC} = 2.7 V,	I_I = –18 mA				–1.2			–1.2	V
V_{OH}	V_{CC} = MIN to MAX‡,	I_{OH} = –100 µA		V_{CC}–0.2			V_{CC}–0.2			V
	V_{CC} = 2.7 V,	I_{OH} = – 8 mA		2.4			2.4			
	V_{CC} = 3 V,	I_{OH} = – 24 mA		2						
	V_{CC} = 3 V,	I_{OH} = –32 mA					2			
V_{OL}	V_{CC} = 2.7 V,	I_{OL} = 100 µA				0.2			0.2	V
	V_{CC} = 2.7 V,	I_{OL} = 24 mA				0.5			0.5	
	V_{CC} = 3 V,	I_{OL} = 16 mA				0.4			0.4	
	V_{CC} = 3 V,	I_{OL} = 32 mA				0.5			0.5	
	V_{CC} = 3 V,	I_{OL} = 48 mA				0.55				
	V_{CC} = 3 V,	I_{OL} = 64 mA							0.55	
I_I	V_{CC} = 0 or MAX‡,	V_I = 5.5 V				50			10	µA
	V_{CC} = 3.6 V,	V_I = V_{CC} or GND	Control pins			±1			±1	
	V_{CC} = 3.6 V,	V_I = V_{CC}	Data pins			1			1	
	V_{CC} = 3.6 V,	V_I = 0				–5			–5	
I_{off}	V_{CC} = 0,	V_I or V_O = 0 to 4.5 V							±100	µA
$I_{I(hold)}$	V_{CC} = 3 V,	V_I = 0.8 V	A inputs	75			75			µA
	V_{CC} = 3 V,	V_I = 2 V		–75			–75			
I_{OZH}	V_{CC} = 3.6 V,	V_O = 3 V				1			1	µA
I_{OZL}	V_{CC} = 3.6 V,	V_O = 0.5 V				–1			–1	µA
I_{CC}	V_{CC} = 3.6 V, V_I = V_{CC} or GND	I_O = 0,	Outputs high		0.12	0.39		0.12	0.19	mA
			Outputs low		8.6	14		8.6	12	
			Outputs disabled		0.12	0.39		0.12	0.19	
ΔI_{CC}§	V_{CC} = 3 V to 3.6 V, Other inputs at V_{CC} or GND	One input at V_{CC} – 0.6 V,				0.3			0.2	mA
C_i	V_I = 3 V or 0				4			4		pF
C_o	V_O = 3 V or 0				8			8		pF

† All typical values are at V_{CC} = 3.3 V, T_A = 25°C.
‡ For conditions shown as MIN or MAX, use the appropriate value specified under recommended operating conditions.
§ This is the increase in supply current for each input that is at the specified TTL voltage level rather than V_{CC} or GND.

switching characteristics over recommended operating free-air temperature range, C_L = 50 pF (unless otherwise noted) (see Note 5)

PARAMETER	FROM (INPUT)	TO (OUTPUT)	SN54LVT244				SN74LVT244					UNIT
			V_{CC} = 3.3 V ± 0.3 V		V_{CC} = 2.7 V		V_{CC} = 3.3 V ± 0.3 V			V_{CC} = 2.7 V		
			MIN	MAX	MIN	MAX	MIN	TYP	MAX	MIN	MAX	
t_{PLH}	A	Y	0.5	4.7		5.2	1	2.5	4.3		5	ns
t_{PHL}			0.5	4.4		5.4	1	2.5	4.2		5.2	
t_{PZH}	$\overline{OE}$	Y	0.8	5.4		6.5	1	2.7	5.2		6.3	ns
t_{PZL}			0.8	5.4		7.6	1.1	3.1	5.2		6.7	
t_{PHZ}	$\overline{OE}$	Y	1.5	6.2		6.9	2.1	3.9	5.6		6.3	ns
t_{PLZ}			1.2	5.5		6	1.8	3.2	5.1		5.6	

NOTE 5: Load circuit and voltage waveforms are shown in Section 1.

PACKAGING INFORMATION

Orderable Device	Status [1]	Package Type	Package Drawing	Pins	Package Qty	Eco Plan [2]	Lead/Ball Finish	MSL Peak Temp [3]
SN74LVT244DBLE	OBSOLETE	SSOP	DB	20		TBD	Call TI	Call TI
SN74LVT244DW	OBSOLETE	SOIC	DW	20		TBD	Call TI	Call TI
SN74LVT244DWR	OBSOLETE	SOIC	DW	20		TBD	Call TI	Call TI
SN74LVT244PWLE	OBSOLETE	TSSOP	PW	20		TBD	Call TI	Call TI
SNJ54LVT244FK	OBSOLETE	LCCC	FK	20		TBD	Call TI	Call TI
SNJ54LVT244J	OBSOLETE	CDIP	J	20		TBD	Call TI	Call TI
SNJ54LVT244W	OBSOLETE	CFP	W	20		TBD	Call TI	Call TI

[1] The marketing status values are defined as follows:
ACTIVE: Product device recommended for new designs.
LIFEBUY: TI has announced that the device will be discontinued, and a lifetime-buy period is in effect.
NRND: Not recommended for new designs. Device is in production to support existing customers, but TI does not recommend using this part in a new design.
PREVIEW: Device has been announced but is not in production. Samples may or may not be available.
OBSOLETE: TI has discontinued the production of the device.

[2] Eco Plan - The planned eco-friendly classification: Pb-Free (RoHS), Pb-Free (RoHS Exempt), or Green (RoHS & no Sb/Br) - please check http://www.ti.com/productcontent for the latest availability information and additional product content details.
TBD: The Pb-Free/Green conversion plan has not been defined.
Pb-Free (RoHS): TI's terms "Lead-Free" or "Pb-Free" mean semiconductor products that are compatible with the current RoHS requirements for all 6 substances, including the requirement that lead not exceed 0.1% by weight in homogeneous materials. Where designed to be soldered at high temperatures, TI Pb-Free products are suitable for use in specified lead-free processes.
Pb-Free (RoHS Exempt): This component has a RoHS exemption for either 1) lead-based flip-chip solder bumps used between the die and package, or 2) lead-based die adhesive used between the die and leadframe. The component is otherwise considered Pb-Free (RoHS compatible) as defined above.
Green (RoHS & no Sb/Br): TI defines "Green" to mean Pb-Free (RoHS compatible), and free of Bromine (Br) and Antimony (Sb) based flame retardants (Br or Sb do not exceed 0.1% by weight in homogeneous material)

[3] MSL, Peak Temp. -- The Moisture Sensitivity Level rating according to the JEDEC industry standard classifications, and peak solder temperature.

Important Information and Disclaimer: The information provided on this page represents TI's knowledge and belief as of the date that it is provided. TI bases its knowledge and belief on information provided by third parties, and makes no representation or warranty as to the accuracy of such information. Efforts are underway to better integrate information from third parties. TI has taken and continues to take reasonable steps to provide representative and accurate information but may not have conducted destructive testing or chemical analysis on incoming materials and chemicals. TI and TI suppliers consider certain information to be proprietary, and thus CAS numbers and other limited information may not be available for release.

In no event shall TI's liability arising out of such information exceed the total purchase price of the TI part(s) at issue in this document sold by TI to Customer on an annual basis.

J (R–GDIP–T**) CERAMIC DUAL IN–LINE PACKAGE

14 LEADS SHOWN

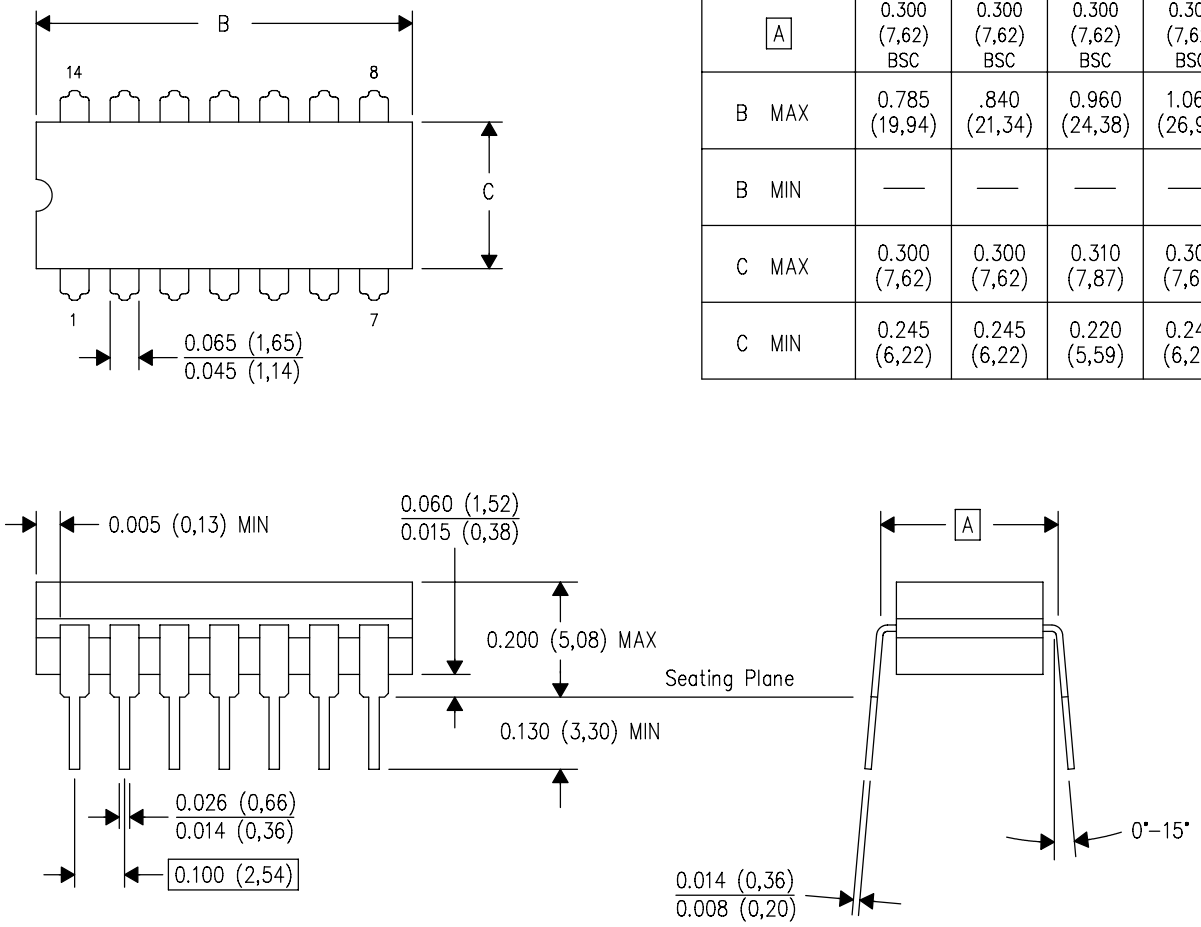

DIM \ PINS **	14	16	18	20
A	0.300 (7,62) BSC	0.300 (7,62) BSC	0.300 (7,62) BSC	0.300 (7,62) BSC
B MAX	0.785 (19,94)	.840 (21,34)	0.960 (24,38)	1.060 (26,92)
B MIN	—	—	—	—
C MAX	0.300 (7,62)	0.300 (7,62)	0.310 (7,87)	0.300 (7,62)
C MIN	0.245 (6,22)	0.245 (6,22)	0.220 (5,59)	0.245 (6,22)

4040083/F 03/03

NOTES:
- A. All linear dimensions are in inches (millimeters).
- B. This drawing is subject to change without notice.
- C. This package is hermetically sealed with a ceramic lid using glass frit.
- D. Index point is provided on cap for terminal identification only on press ceramic glass frit seal only.
- E. Falls within MIL STD 1835 GDIP1–T14, GDIP1–T16, GDIP1–T18 and GDIP1–T20.

W (R–GDFP–F20) CERAMIC DUAL FLATPACK

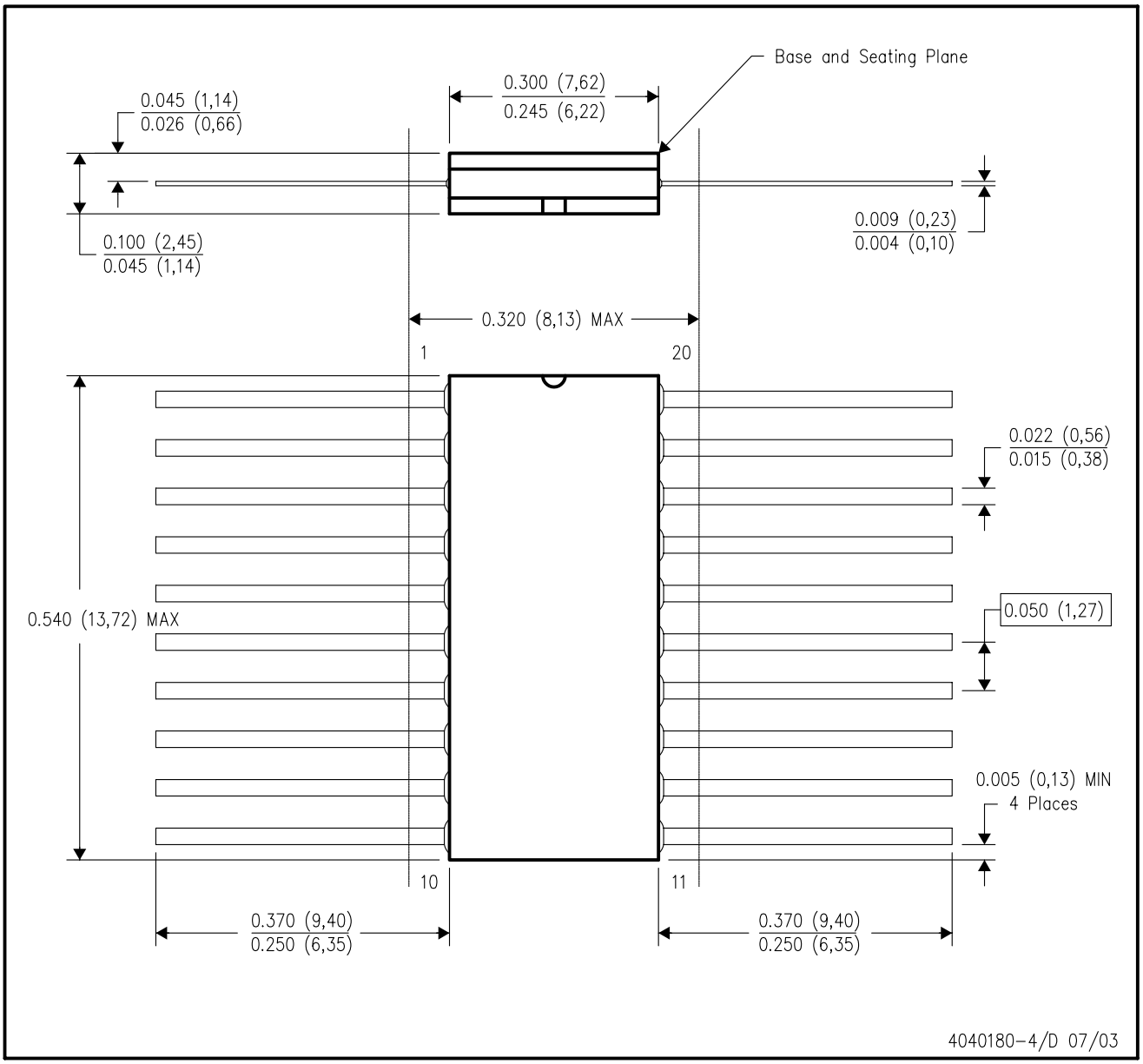

NOTES:
A. All linear dimensions are in inches (millimeters).
B. This drawing is subject to change without notice.
C. This package can be hermetically sealed with a ceramic lid using glass frit.
D. Index point is provided on cap for terminal identification only.
E. Falls within Mil–Std 1835 GDFP2–F20

FK (S–CQCC–N**) LEADLESS CERAMIC CHIP CARRIER

28 TERMINAL SHOWN

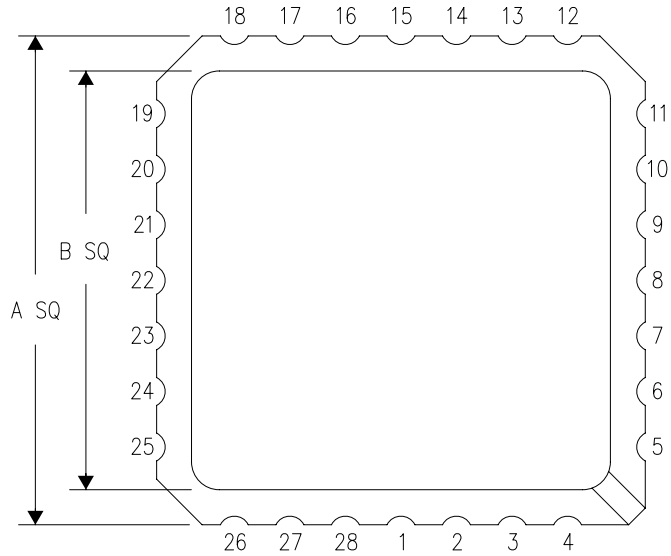

NO. OF TERMINALS **	A		B	
	MIN	MAX	MIN	MAX
20	0.342 (8,69)	0.358 (9,09)	0.307 (7,80)	0.358 (9,09)
28	0.442 (11,23)	0.458 (11,63)	0.406 (10,31)	0.458 (11,63)
44	0.640 (16,26)	0.660 (16,76)	0.495 (12,58)	0.560 (14,22)
52	0.740 (18,78)	0.761 (19,32)	0.495 (12,58)	0.560 (14,22)
68	0.938 (23,83)	0.962 (24,43)	0.850 (21,6)	0.858 (21,8)
84	1.141 (28,99)	1.165 (29,59)	1.047 (26,6)	1.063 (27,0)

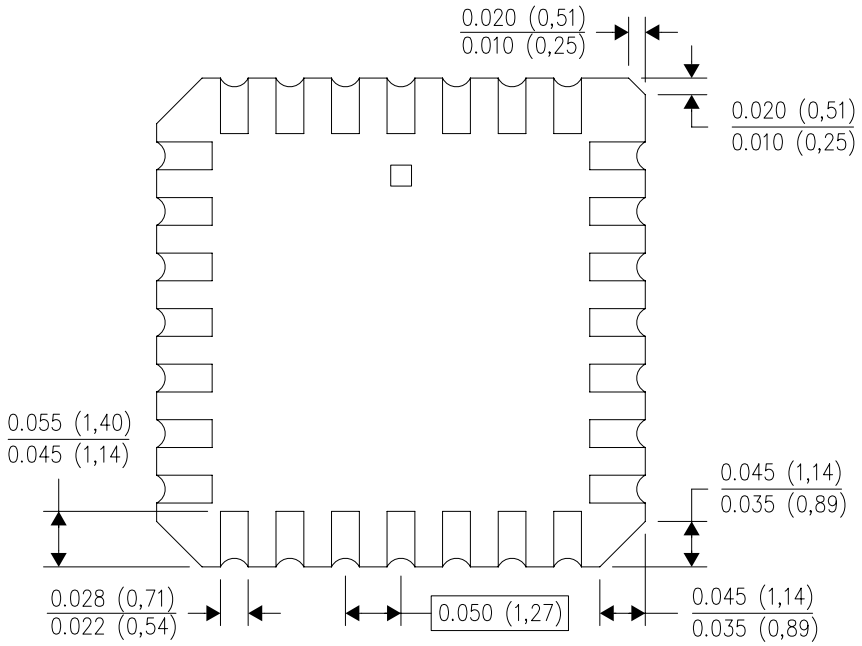

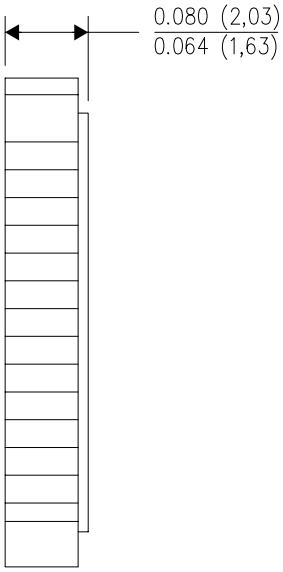

4040140/D 01/11

NOTES:
A. All linear dimensions are in inches (millimeters).
B. This drawing is subject to change without notice.
C. This package can be hermetically sealed with a metal lid.
D. Falls within JEDEC MS–004

DW (R–PDSO–G20) PLASTIC SMALL OUTLINE

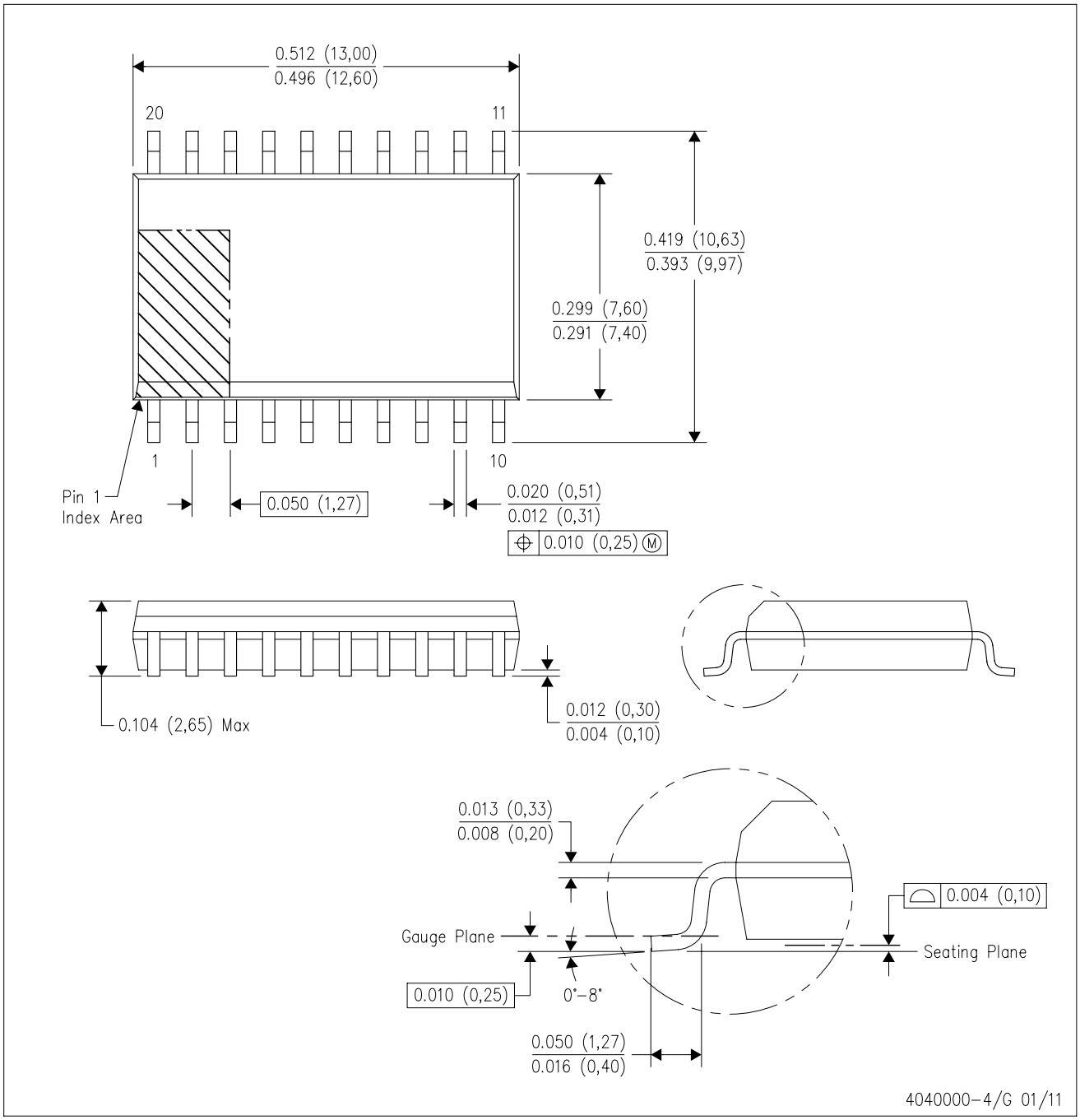

NOTES:
A. All linear dimensions are in inches (millimeters). Dimensioning and tolerancing per ASME Y14.5M–1994.
B. This drawing is subject to change without notice.
C. Body dimensions do not include mold flash or protrusion not to exceed 0.006 (0,15).
D. Falls within JEDEC MS–013 variation AC.

PW (R-PDSO-G20) PLASTIC SMALL OUTLINE

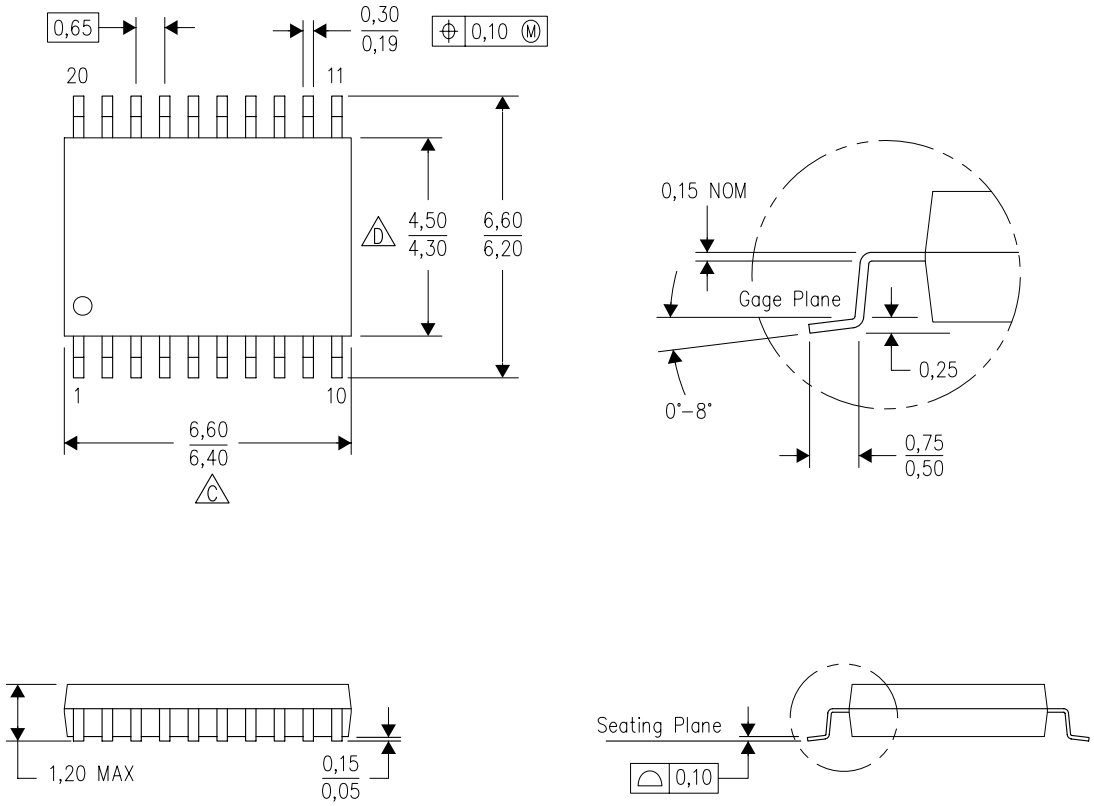

4040064-5/G 02/11

NOTES:
A. All linear dimensions are in millimeters. Dimensioning and tolerancing per ASME Y14.5M-1994.
B. This drawing is subject to change without notice.
C. Body length does not include mold flash, protrusions, or gate burrs. Mold flash, protrusions, or gate burrs shall not exceed 0,15 each side.
D. Body width does not include interlead flash. Interlead flash shall not exceed 0,25 each side.
E. Falls within JEDEC MO-153

DB (R-PDSO-G)** **PLASTIC SMALL-OUTLINE**

28 PINS SHOWN

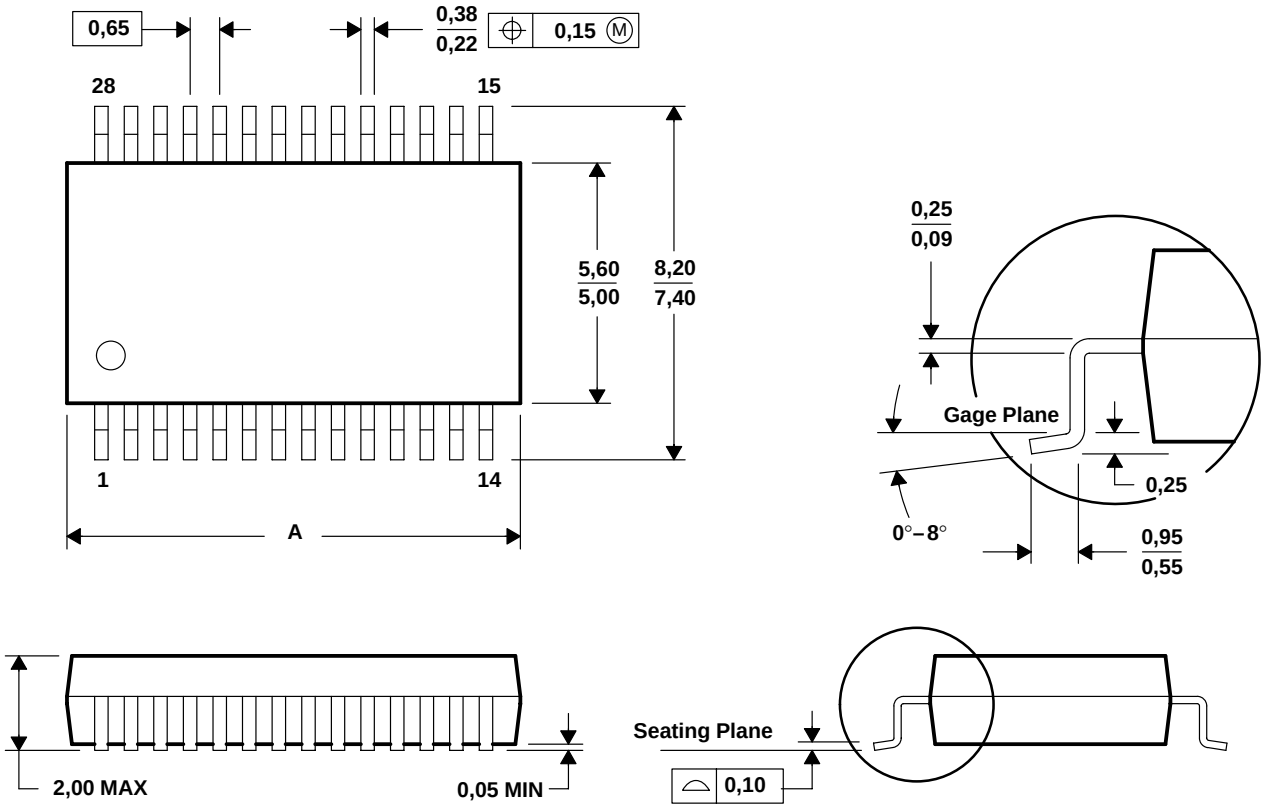

DIM \ PINS **	14	16	20	24	28	30	38
A MAX	6,50	6,50	7,50	8,50	10,50	10,50	12,90
A MIN	5,90	5,90	6,90	7,90	9,90	9,90	12,30

4040065 /E 12/01

NOTES: A. All linear dimensions are in millimeters.
B. This drawing is subject to change without notice.
C. Body dimensions do not include mold flash or protrusion not to exceed 0,15.
D. Falls within JEDEC MO-150

IMPORTANT NOTICE

Texas Instruments Incorporated and its subsidiaries (TI) reserve the right to make corrections, modifications, enhancements, improvements, and other changes to its products and services at any time and to discontinue any product or service without notice. Customers should obtain the latest relevant information before placing orders and should verify that such information is current and complete. All products are sold subject to TI's terms and conditions of sale supplied at the time of order acknowledgment.

TI warrants performance of its hardware products to the specifications applicable at the time of sale in accordance with TI's standard warranty. Testing and other quality control techniques are used to the extent TI deems necessary to support this warranty. Except where mandated by government requirements, testing of all parameters of each product is not necessarily performed.

TI assumes no liability for applications assistance or customer product design. Customers are responsible for their products and applications using TI components. To minimize the risks associated with customer products and applications, customers should provide adequate design and operating safeguards.

TI does not warrant or represent that any license, either express or implied, is granted under any TI patent right, copyright, mask work right, or other TI intellectual property right relating to any combination, machine, or process in which TI products or services are used. Information published by TI regarding third-party products or services does not constitute a license from TI to use such products or services or a warranty or endorsement thereof. Use of such information may require a license from a third party under the patents or other intellectual property of the third party, or a license from TI under the patents or other intellectual property of TI.

Reproduction of TI information in TI data books or data sheets is permissible only if reproduction is without alteration and is accompanied by all associated warranties, conditions, limitations, and notices. Reproduction of this information with alteration is an unfair and deceptive business practice. TI is not responsible or liable for such altered documentation. Information of third parties may be subject to additional restrictions.

Resale of TI products or services with statements different from or beyond the parameters stated by TI for that product or service voids all express and any implied warranties for the associated TI product or service and is an unfair and deceptive business practice. TI is not responsible or liable for any such statements.

TI products are not authorized for use in safety-critical applications (such as life support) where a failure of the TI product would reasonably be expected to cause severe personal injury or death, unless officers of the parties have executed an agreement specifically governing such use. Buyers represent that they have all necessary expertise in the safety and regulatory ramifications of their applications, and acknowledge and agree that they are solely responsible for all legal, regulatory and safety-related requirements concerning their products and any use of TI products in such safety-critical applications, notwithstanding any applications-related information or support that may be provided by TI. Further, Buyers must fully indemnify TI and its representatives against any damages arising out of the use of TI products in such safety-critical applications.

TI products are neither designed nor intended for use in military/aerospace applications or environments unless the TI products are specifically designated by TI as military-grade or "enhanced plastic." Only products designated by TI as military-grade meet military specifications. Buyers acknowledge and agree that any such use of TI products which TI has not designated as military-grade is solely at the Buyer's risk, and that they are solely responsible for compliance with all legal and regulatory requirements in connection with such use.

TI products are neither designed nor intended for use in automotive applications or environments unless the specific TI products are designated by TI as compliant with ISO/TS 16949 requirements. Buyers acknowledge and agree that, if they use any non-designated products in automotive applications, TI will not be responsible for any failure to meet such requirements.

Following are URLs where you can obtain information on other Texas Instruments products and application solutions:

Products		**Applications**	
Audio	www.ti.com/audio	Communications and Telecom	www.ti.com/communications
Amplifiers	amplifier.ti.com	Computers and Peripherals	www.ti.com/computers
Data Converters	dataconverter.ti.com	Consumer Electronics	www.ti.com/consumer-apps
DLP® Products	www.dlp.com	Energy and Lighting	www.ti.com/energy
DSP	dsp.ti.com	Industrial	www.ti.com/industrial
Clocks and Timers	www.ti.com/clocks	Medical	www.ti.com/medical
Interface	interface.ti.com	Security	www.ti.com/security
Logic	logic.ti.com	Space, Avionics and Defense	www.ti.com/space-avionics-defense
Power Mgmt	power.ti.com	Transportation and Automotive	www.ti.com/automotive
Microcontrollers	microcontroller.ti.com	Video and Imaging	www.ti.com/video
RFID	www.ti-rfid.com	Wireless	www.ti.com/wireless-apps
RF/IF and ZigBee® Solutions	www.ti.com/lprf		

TI E2E Community Home Page e2e.ti.com

Mailing Address: Texas Instruments, Post Office Box 655303, Dallas, Texas 75265
Copyright © 2011, Texas Instruments Incorporated