THIS DRAWING IS UNPUBLISHED. RELEASED FOR PUBLICATION ,19 .
© COPYRIGHT 19 BY AMP INCORPORATED. ALL RIGHTS RESERVED.

LOC	DIST
AD	39

REVISIONS

P	LTR	DESCRIPTION	DATE	DWN	APVD
	0	RLSE -1 PER NPR 5307 WAS 95-2197-15-1	03-28-95	SK	SK
	A	REV PER EC 0020-0657-96	12/06/96	JR	RS
	A1	REVISED PER ECR-14-009533	07/07/14	AP	JHA

1. COORDINATE DIMENSION APPLIES FROM CENTER OF ACTUAL FEATURE.
2. LCP, BLACK
3. 2.54µm MIN TIN-LEAD ON SOLDER TAIL OVER 1.90µm MIN NICKEL ALL OVER.
4. CONTACTS: BRASS

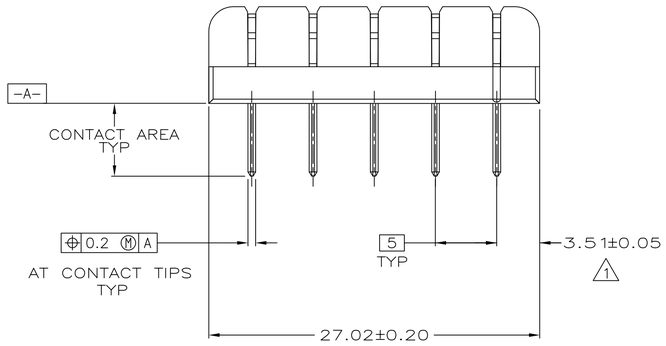

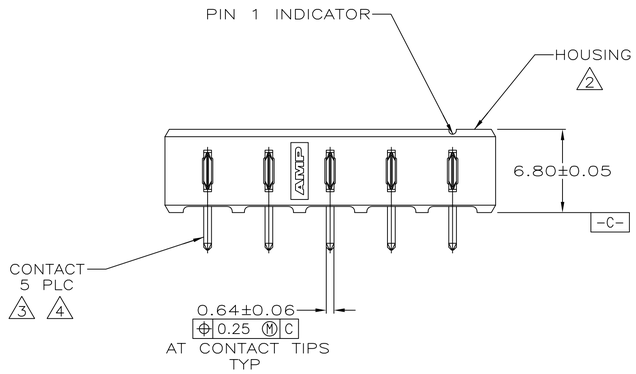

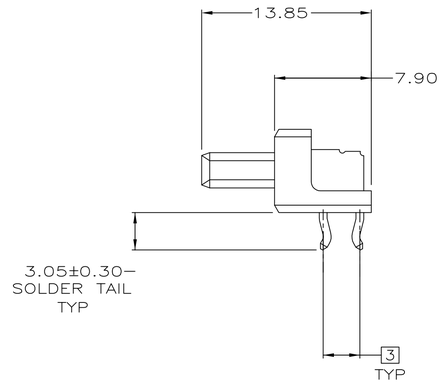

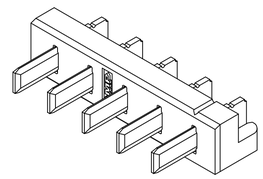

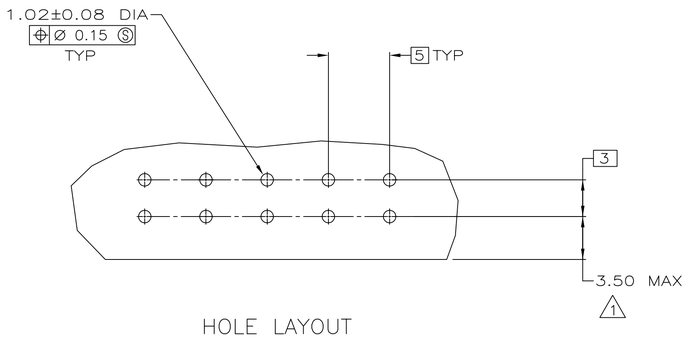

HOLE LAYOUT

SUPERCEDED BY 5787443-1 | 787443-1

PART NO

THIS DRAWING IS A CONTROLLED DOCUMENT FOR AMP INCORPORATED. IT IS SUBJECT TO CHANGE AND THE CONTROLLING ENGINEERING ORGANIZATION SHOULD BE CONTACTED FOR THE LATEST REVISION.

DIMENSIONS: mm

TOLERANCES UNLESS OTHERWISE SPECIFIED:

0 PLC	±-
1 PLC	±-
2 PLC	±0.13
3 PLC	±-
4 PLC	±-
ANGLES	±-

MATERIAL: SEE CALLOUTS

FINISH: SEE CALLOUTS

DWN	S.KLINE	03-28-95
CHK	S.KLINE	03-30-95
APVD	S.KLINE	03-30-95
PRODUCT SPEC	108-1501	
APPLICATION SPEC	114-24005	
WEIGHT	-	

CUSTOMER DRAWING

TE Connectivity

NAME: HEADER ASSEMBLY, RIGHT ANGLE, KEYLESS, 5mm ℄, 5 POSN, RETENTIVE SOLDER TAILS, BATTERY INTERCONNECT

SIZE	CAGE CODE	DRAWING NO
A1	00779	C-787443

SCALE	SHEET	REV
4:1	1 OF 1	A1