THIS DRAWING IS UNPUBLISHED. RELEASED FOR PUBLICATION -,- .
© COPYRIGHT - BY TYCO ELECTRONICS CORPORATION. ALL RIGHTS RESERVED.

LOC	DIST
J	

REVISIONS

P	LTR	DESCRIPTION	DATE	DWN	APVD
	O	RELEASED (FJB0-0582-04)	09JUN04	T.K	I.E

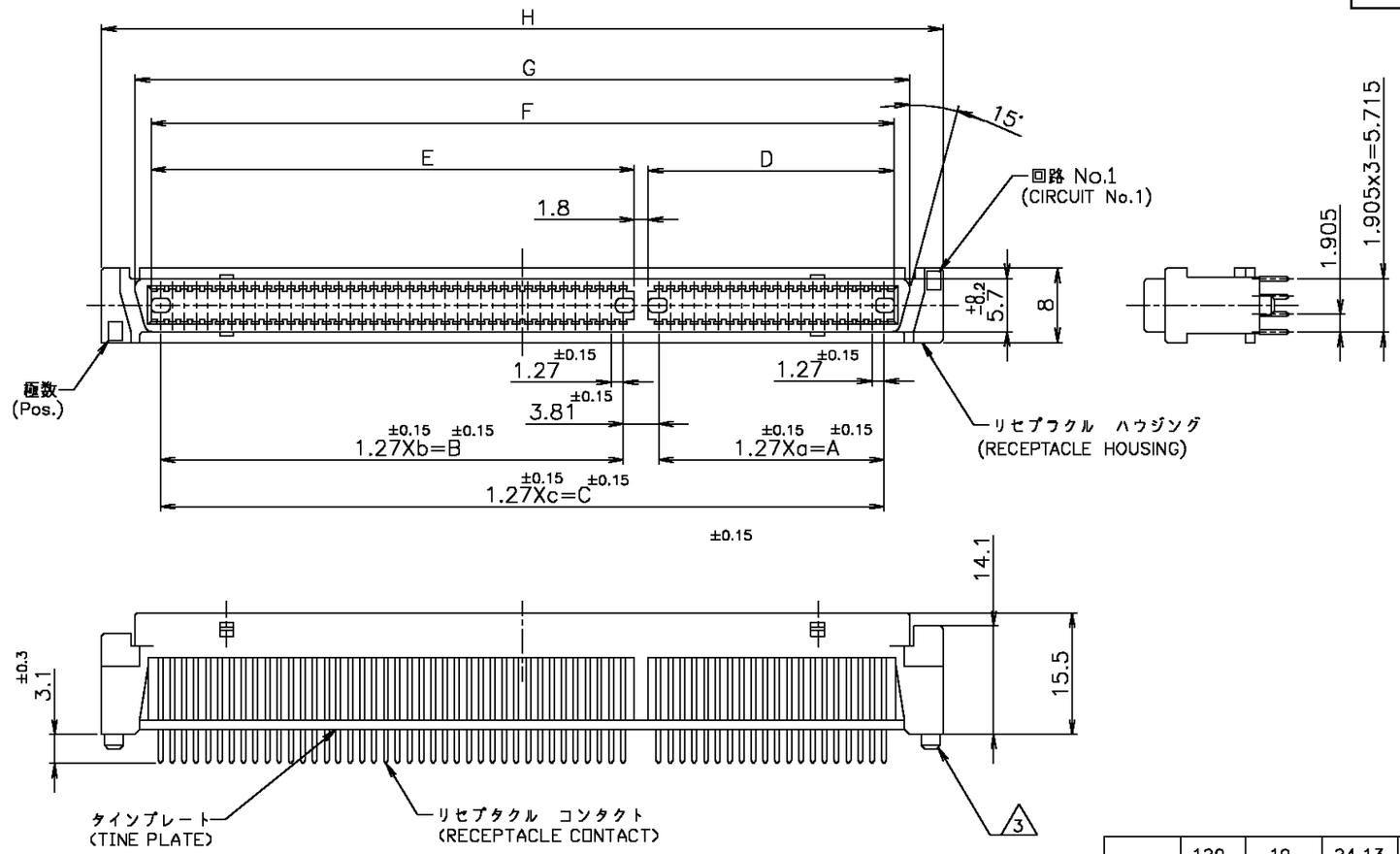

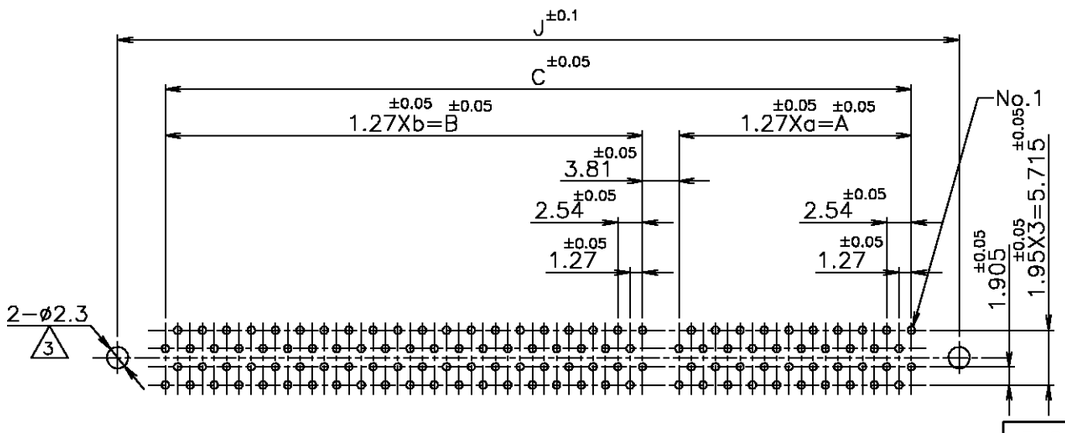

基板仕様
(コネクタ装着側)

P.C.BOARD LAYOUT
(CONNECTOR MOUNT SIDE)

NOTE:

1. MATERIAL:HOUSING, TINE PLATE;THERMOPLASTICS (UL 94V-0) BLACK
   CONTACT:COPPER ALLOY
2. FINISH:CONTACT:Au AT CONTACT AREA
   TIN AT TINE, OVER Ni
3. BOSS FOR POSITIONING:P/N -1,-2,-3,-4

注記:

1. 材料:ハウジング、タインプレート;熱可塑性樹脂 (UL 94V-0) 色:黒
   コンタクト:銅合金
2. 表面仕上げ;
   コンタクト:全面ニッケル下地めっき
   接触部金めっき、脚部すずめっき
3. ボスは型番 -1,-2,-3,-4のみ

GOLD PLATING	Pos.	a	A	b	B	c	C	D	E	F	G	H	J	P/N	
0.76μm	120	19	24.13	39	49.53	〃	77.47	26.13	51.53	79.47	82.56	90.09	87.44	2-	-5
	100	〃	〃	〃	〃	49	62.23	〃	〃	64.23	67.32	74.85	72.2	2-	-4
0.3μm	180	39	49.53	49	62.23	〃	115.57	51.53	64.23	117.57	120.66	128.19	125.54		-8
	160	29	36.83	49	62.23	〃	102.87	38.83	64.23	104.87	107.96	115.49	112.84		-7
	140	29	36.83	39	49.53	〃	90.17	38.83	51.53	92.17	95.26	102.79	100.14		-6
	120	19	24.13	39	49.53	〃	77.47	26.13	51.53	79.47	82.56	90.09	87.44		-5
	100	〃	〃	〃	〃	49	62.23	〃	〃	64.23	67.32	74.85	72.2		-4
	80	〃	〃	〃	〃	39	49.53	〃	〃	51.53	54.62	62.15	59.5		-3
	60	〃	〃	〃	〃	29	36.83	〃	〃	38.83	41.92	49.45	46.8		-2
	40	〃	〃	〃	〃	19	24.13	〃	〃	26.13	29.22	36.75	34.1	5176378-1	

鉛フリー
LEAD FREE

TOLERANCES UNLESS OTHERWISE SPECIFIED
一般公差
10≧: ±0.2
30≧ > 10: ±0.25
100≧ > 30: ±0.3
ANGLES: ±3°

THIS DRAWING IS A CONTROLLED DOCUMENT.

DIMENSIONS: MM

TOLERANCES UNLESS OTHERWISE SPECIFIED:
0 PLC ±-
1 PLC ±-
2 PLC ±-
3 PLC ±-
4 PLC ±-
ANGLES ±-

MATERIAL 1

FINISH 2

DWN	T.KAWAMAE	09JUN'04
CHK	I.ENOMOTO	09JUN'04
APVD	I.ENOMOTO	09JUN'04
PRODUCT SPEC	108-5309	
APPLICATION SPEC		
WEIGHT		

tyco Electronics
Tyco Electronics AMP K.K.
Kawasaki, Japan

NAME: 1.27 FH CONN. (VERTICAL) REC, 18mm STACK

SIZE	CAGE CODE	DRAWING NO	RESTRICTED TO
A3	00779	C- 5176378	—

CUSTOMER DRAWING | SCALE NTS | SHEET 1 OF 1 | REV O

AMP 1470-19 REV 31MAR2000
02DEC2002 4:31pm