REV	DT06-08SB
D	

REVISIONS

SYM	DESCRIPTION	DATE	APPROVED
C	REVISED AND REDRAWN PER E.O. A09284	12/2/89	J.A.
D	REVISED PER E.O. A09335	9/6/90	J.A.
E	REVISED PER E.O. P15019	4-4-96	ADR

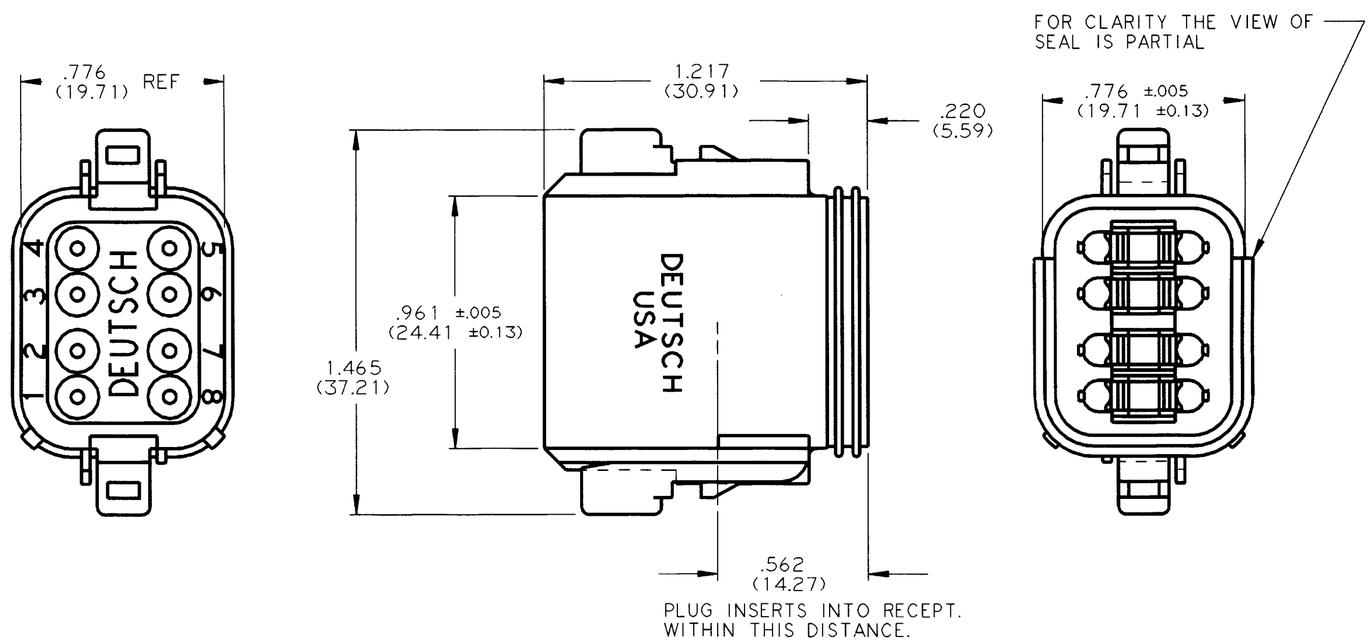

NOTES:

1. ALL DIMENSIONS ARE IN INCHES (METRIC).
2. ALL DIMENSIONS ARE ±.025 (0.63) UNLESS OTHERWISE SPECIFIED.
3. CONSULT FACTORY FOR CONTACT SPECIFICATION AND APPLICATION.
4. FOR MORE INFO SEE ENVELOPE DWG. 0425-017-0000 AND 0425-015-0000.

	SIGNATURE & DATE
DR	C.WOODRUFF 05JUL90
CHK	
PE	Wladimir Tonne 5-6-96
APPD	R. Reed 4-4-96
SCALE NONE	WT ———

8 WAY PLUG
COLOR: BLACK
D.T. SERIES

ENVELOPE

CP — MATL CODE

The Deutsch Company
DEUTSCH I.P.D.
37140 INDUSTRIAL AVE.
HEMET, CALIF. 92343

B — DWG SIZE

DT06-08SB

CODE 11139 — SHEET 1 OF 1