THIS DRAWING IS UNPUBLISHED. RELEASED FOR PUBLICATION -,- .
© COPYRIGHT - By - ALL RIGHTS RESERVED.

LOC	DIST
AF	50

REVISIONS

P	LTR	DESCRIPTION	DATE	DWN	APVD
	D	REVISED PER ECR-12-013445	27OCT12	KH	PD

1 CONTINUOUS STRIP ON REELS

2 WIRE SIZE IS #22-#18 AWG

3 INSULATION RANGE IS .060-.100 DIA

4 MATING TAB THK IS .032±.001

5 REELED WITH INTERLEAVING PAPER

6 PRELIMINARY - NOT FOR PRODUCTION

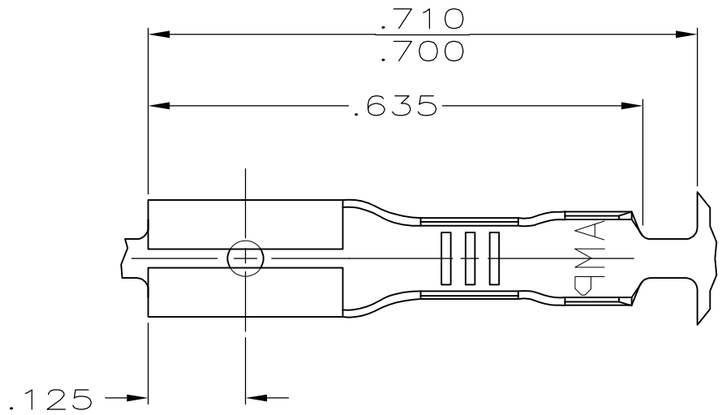

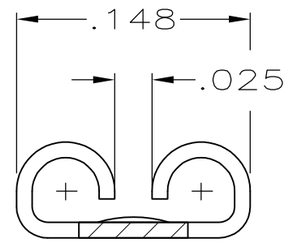

VIEW Z-Z
SCALE 10:1

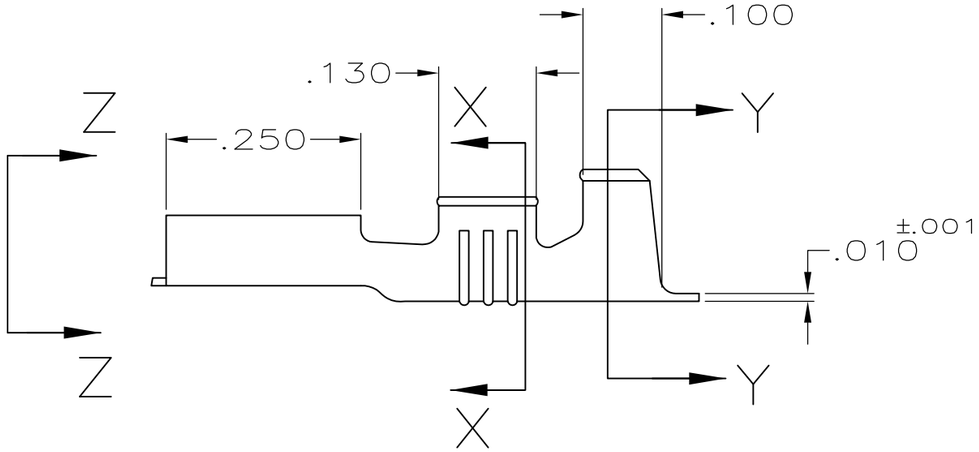

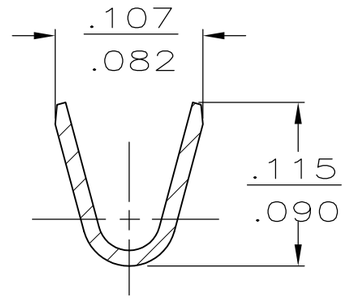

SECTION X-X
SCALE 10:1

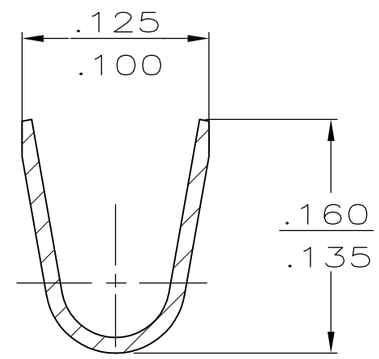

SECTION Y-Y
SCALE 10:1

6 5	
	60577-2
	60577-1
	WIRE SIZE

THIS DRAWING IS A CONTROLLED DOCUMENT.

DIMENSIONS: INCHES

TOLERANCES UNLESS OTHERWISE SPECIFIED:

0 PLC	± -
1 PLC	± -
2 PLC	± -
3 PLC	± .015
4 PLC	± -
ANGLES	± -

MATERIAL: BRASS

FINISH: PRE-TIN

DWN	JR RUTH	12/20/90
CHK	MS FEHER	12/20/90
APVD	D REINER	12/20/90

PRODUCT SPEC: -

APPLICATION SPEC: -

WEIGHT: -

CUSTOMER DRAWING

TE Connectivity

NAME: RECEPTACLE, FASTON, .110 SERIES -

SIZE	CAGE CODE	DRAWING NO	RESTRICTED TO
A3	00779	C-60577	-

SCALE	SHEET	REV
5:1	1 OF 1	D