| PART NAME | NEMA 4X DIE-CAST ALUMINUM BOX w/MTG. BRKTS. | PART No. | AN-2857 & AN-2857-B | REVISION DATE | 11-15-11 |
|---|---|---|---|---|---|

MATERIAL: ALUMINUM ALLOY #ADC-12

FINISH: NATURAL (NO SUFFIX)
SMOOTH BLACK (SUFFIX -B)

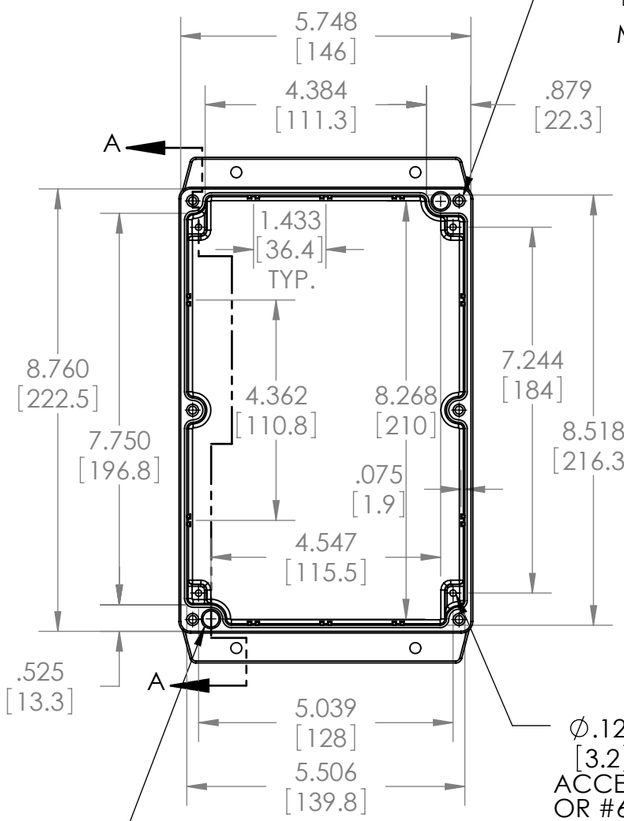


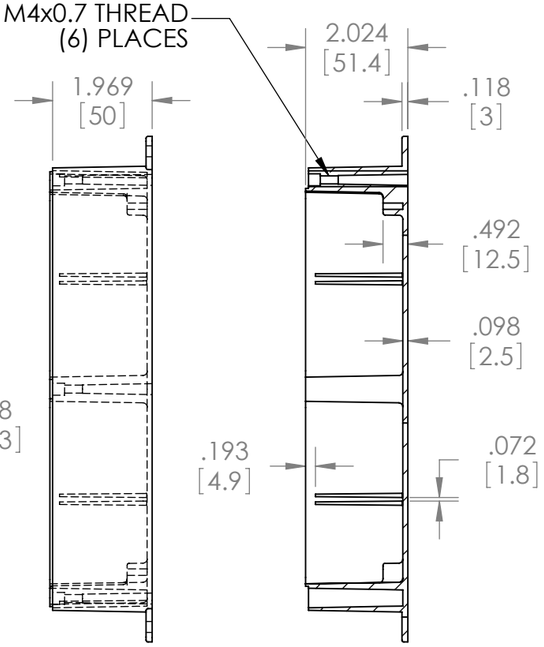


SECTION A-A

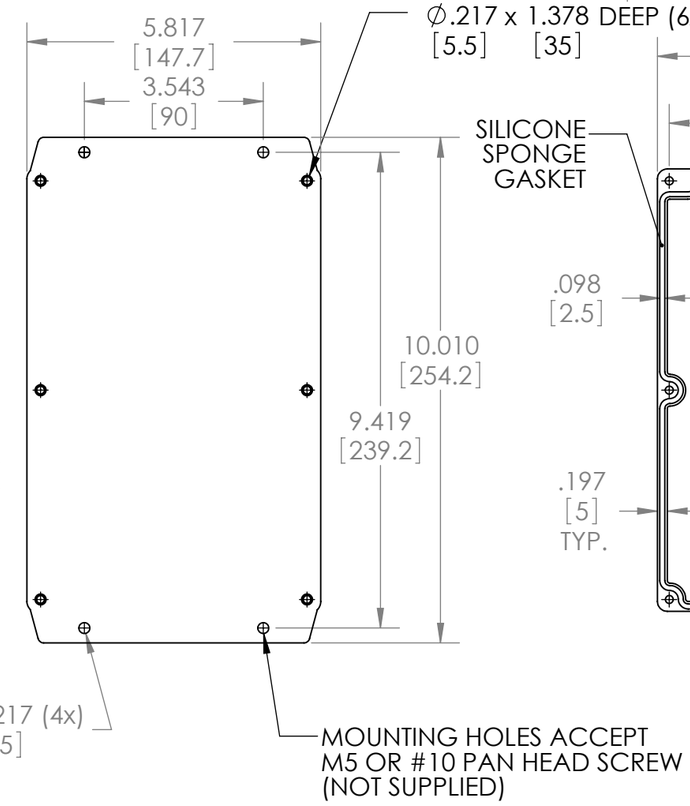


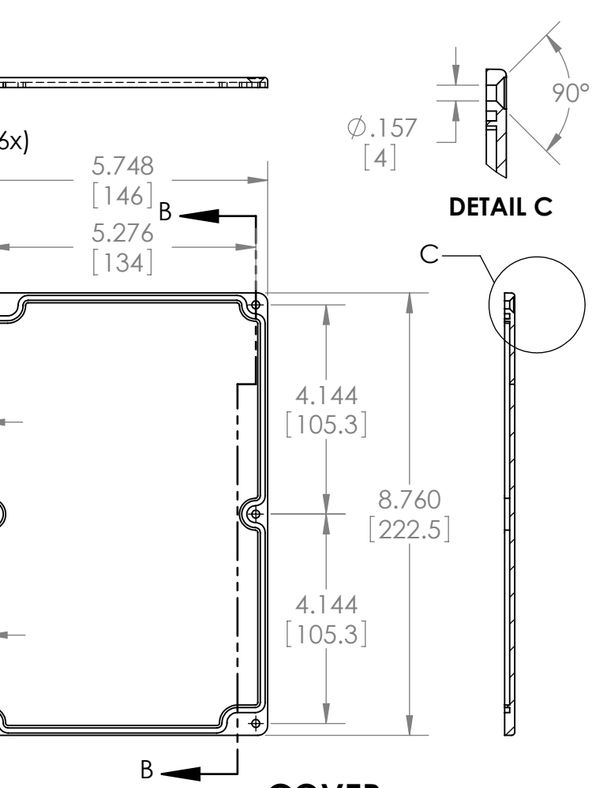


COVER

SECTION B-B

∅.126 x .394 DEEP (4x)
[3.2] [10]
ACCEPTS M3.5 x 6mm [.24"] LG.
OR #6 x 1/4" LG.
SELF-TAPPING SCREW
(NOT SUPPLIED)

BODY

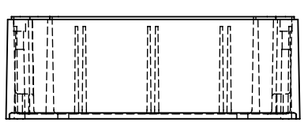

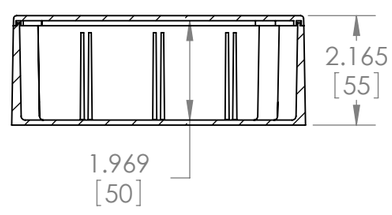


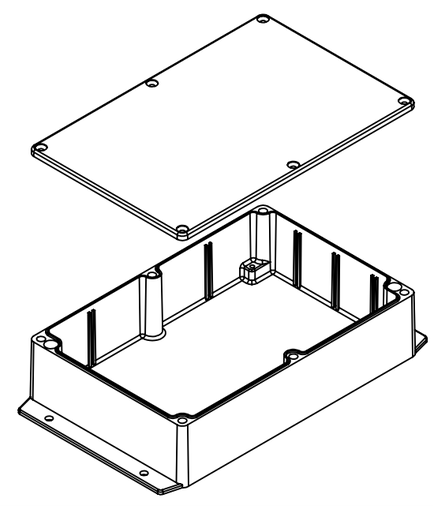

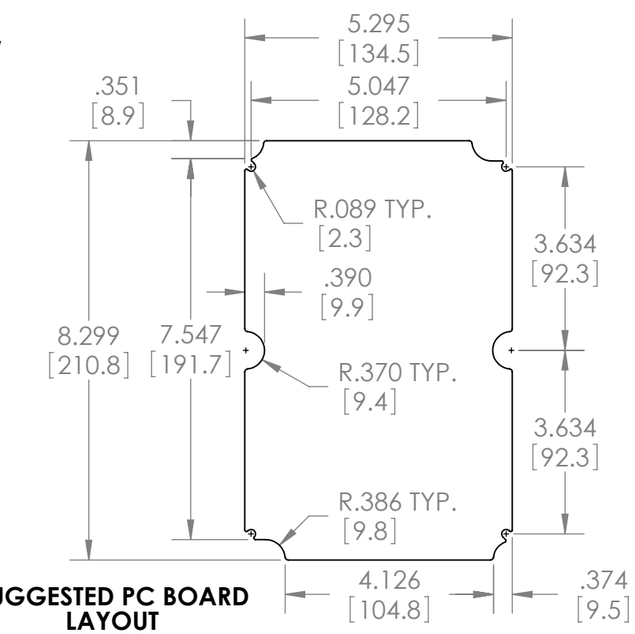


SUGGESTED PC BOARD LAYOUT

NOTES:
1.) SIX (6) M4x0.7 x 20mm (.79") LG. CSK. HEAD STAINLESS STEEL SCREWS SUPPLIED FOR ASSEMBLY OF COVER TO BODY.
2.) ALL HOLE DIAMETERS HAVE ±.005[±.13] TOLERANCE
ALL OTHER DIMENSIONS HAVE ±.015[±.38] TOLERANCE
3.) ALL OUTSIDE AND INSIDE DRAFT ANGLE: 1°